United States Patent [19]

Birch et al.

[11] **3,794,001**

[45] **Feb. 26, 1974**

[54] **VARIABLE TIP CLEARANCE ENGINE COOLING FAN SHROUD**

[75] Inventors: **Philip L. Birch**, Detroit; **Robert W. Morrison**, Westland, both of Mich.

[73] Assignee: **Ford Motor Company**, Dearborn, Mich.

[22] Filed: **Mar. 2, 1973**

[21] Appl. No.: **337,516**

[52] **U.S. Cl.**..... **123/41.05**, 123/41.49, 123/41.58, 415/144, 415/146, 415/164, 415/174, 415/219

[51] **Int. Cl.**..... **F01p 7/02**, F01p 11/10

[58] **Field of Search** 123/41.04, 41.05, 41.02, 41.49, 123/41.58, 41.59, 41.65; 415/144, 145, 146, 164, 165, 174, 211, 219

[56] **References Cited**

UNITED STATES PATENTS

1,181,873	5/1916	Gue et al.	123/41.65 UX
2,149,267	3/1939	Bouvy et al.	123/41.49 UX
2,355,619	8/1944	Bossart	415/219 X
2,454,324	11/1948	Lee	123/41.65 X
3,144,859	8/1964	Walton	123/41.49
3,203,180	8/1965	Price	415/144 UX
3,335,943	8/1967	Sorrenti	415/211 UX
3,552,483	1/1971	North et al.	123/41.04 X
3,664,759	5/1972	Biheller	415/147 X
3,747,341	7/1973	Davis	415/145

FOREIGN PATENTS OR APPLICATIONS

192,249	11/1956	Austria	415/146
553,045	5/1943	Great Britain	415/146

Primary Examiner—Al Lawrence Smith

Attorney, Agent, or Firm—Keith L. Zerschling; Joseph W. Malleck

[57] **ABSTRACT**

A fan & shroud assembly for use in cooling a radiator of an internal combustion engine. The assembly has a resilient insert forming part of a fan shroud which functions to vary the clearance between the shroud and fan blade tips in response to the velocity of air flow induced by the fan. The shroud yields to increasing air velocity to obtain said clearance variation and accompanying improved efficiency.

7 Claims, 4 Drawing Figures

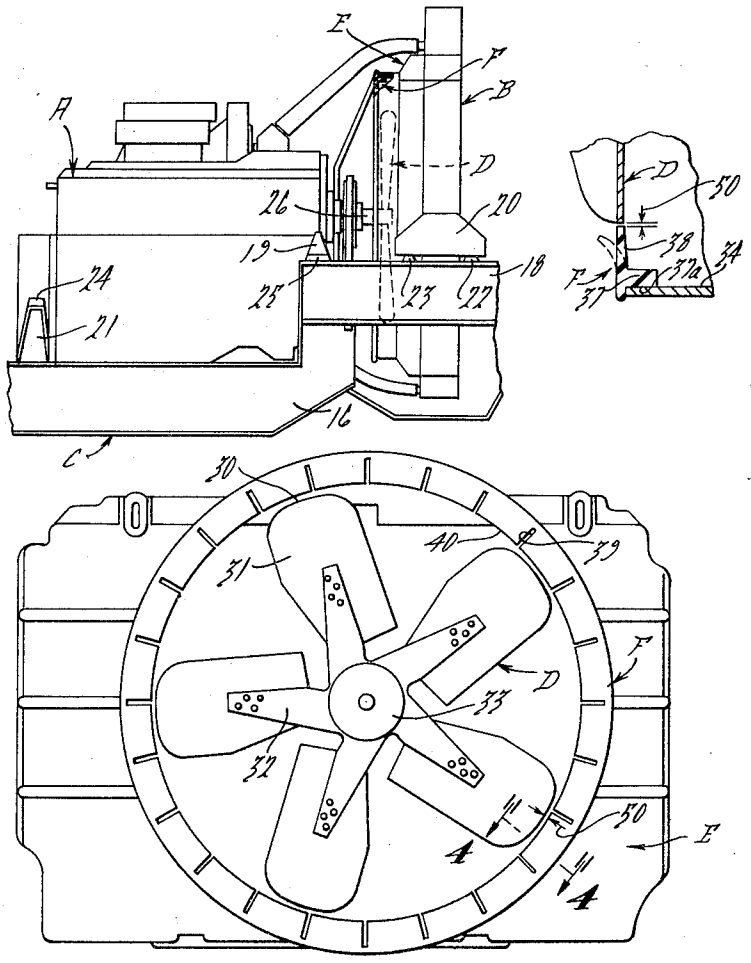

Fig. 1.

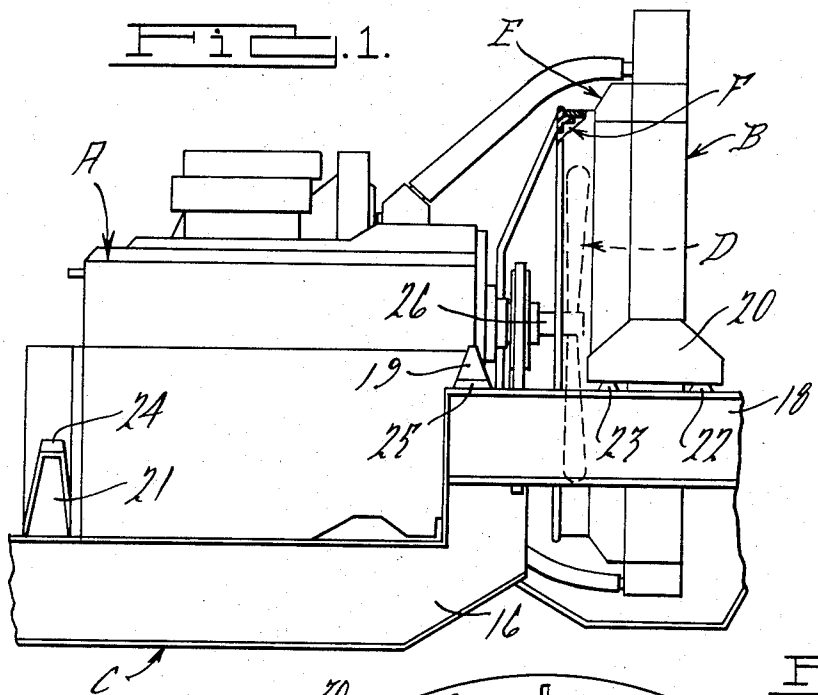

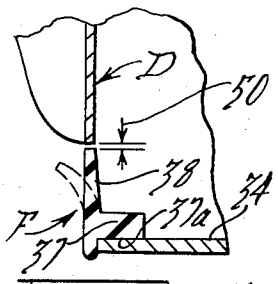

Fig. 4.

Fig. 2.

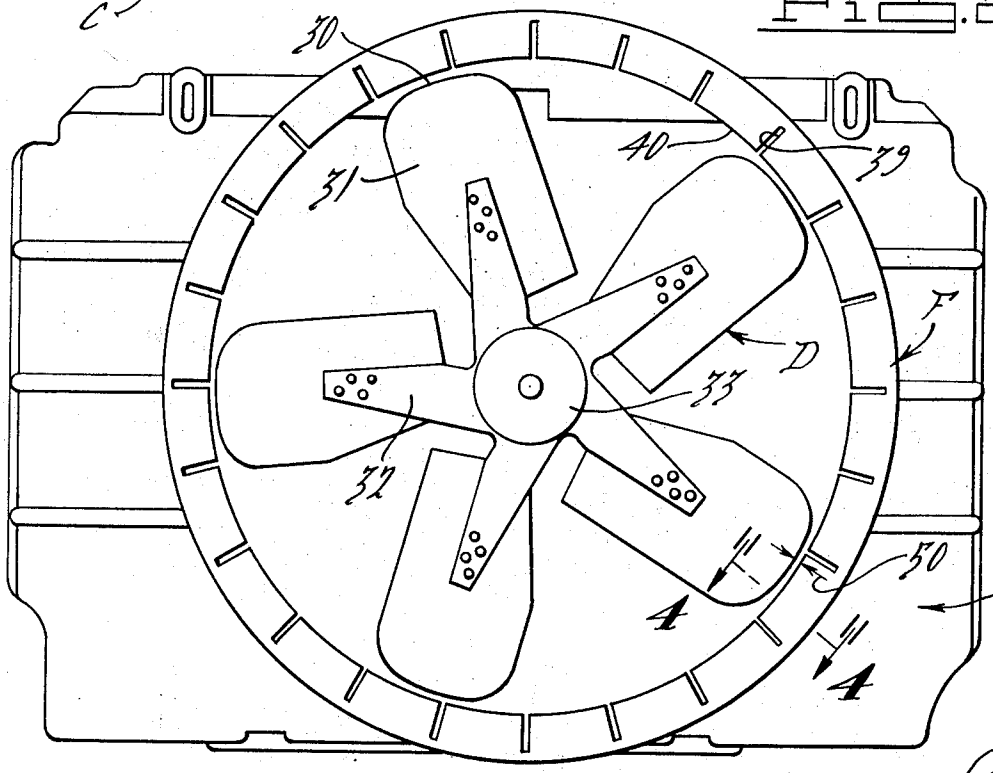

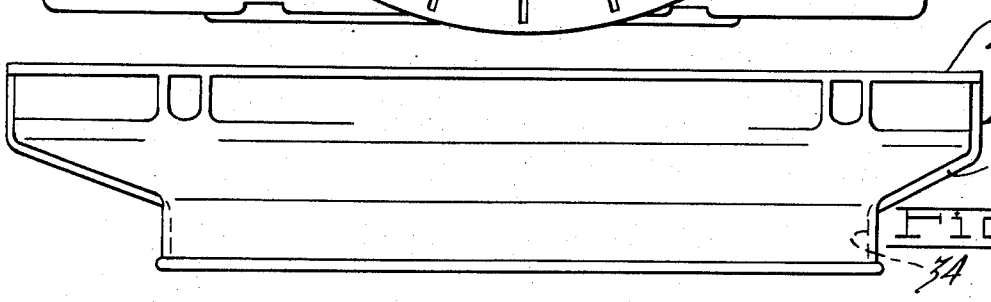

Fig. 3.

VARIABLE TIP CLEARANCE ENGINE COOLING FAN SHROUD

BACKGROUND OF THE INVENTION

In most types of motor vehicle applications, the cooling fan revolves within a shroud to secure an increase in flow efficiency and thus an improvement in heat transfer between the air and the coolant flowing through the radiator. The less the differential between the external diameter of the fan and the internal diameter of the shroud, the more efficient will be the air flow and thereby improved heat transfer.

It is known that in determining the relative diameters of the fan blade tips and shroud, cognizance has to be taken of the fact that there can be an unavoidable relative radial movement of the fan in the shroud, and thus the relative spacing between the fan tips and shroud is disturbed to decrease efficiency. This results because it is common to mount a unitary shroud on a radiator which, in turn, is mounted on a vehicle chassis also supporting the engine. The fan and shroud are fixed to the vehicle chassis at different points to permit such relative movement, the fan through the medium of the engine and the shroud through the medium of the radiator. Thus sizable clearance has been necessitated.

The prior art has not been able to successfully accommodate the divergent goals of (a) variable clearance to continuously promote cooling efficiency and (b) greater clearance to decrease interference due to relative movement. Attempts have been directed at one or the other of such aspects. For example, improved mountings have been devised to preclude relative radial movement but not full range operating efficiency. Flexible blading as been suggested to unload the fan at a predetermined air flow thereby leveling slip and reducing parasitic heat generation of the fan drive.

SUMMARY OF THE INVENTION

It is a primary object of this invention to provide a fan & shroud assembly which is effective to automatically vary the clearance between the fan blade tips and fan shroud in proportion to engine speed and/or air flow. At the same time, it is an object that the fan assembly overcomes the problem of relative movement that may take place between the fan and shroud during motor vehicle operation.

Another object is to provide a fan & shroud assembly effective to suppress noise at high air flows resulting from higher vehicle speeds; this is particularly facilitated by substantially and automatically eliminating the normal shroud effect.

Specific features pursuant to the above object comprise the use of an annular shroud having resilient segments projecting inwardly to define an inner segmented periphery in the unflexed condition. As fan speed increases, thereby drawing increased air flow therethrough, the inner projections of the segments yield and bend to define an inner periphery of greater diameter, or in the alternative they may define a periphery of slightly changed concentricity due to a slight change in the concentricity of the air flow.

BRIEF DESCRIPTION OF THE DRAWINGS

FIG. 1 is an elevational view of an engine mounted upon a chassis and carrying a radiator to which is mounted the fan shroud; the fan is mounted to the engine and projects into the fan shroud;

FIG. 2 is an enlarged front elevational view of the radiator and fan assembly of FIG. 1;

FIG. 3 is a plan view of the structure of FIG. 2; and

FIG. 4 is a sectional view of a portion of FIG. 2 taken substantially along line 4—4 of FIG. 2.

DETAILED DESCRIPTION

Turning now to the drawings and particularly to FIG. 1, there is represented a fan and shroud assembly useful in connection with an internal combustion engine A and a radiator B, each independently mounted upon a suspension means C. A fan D is employed to draw air through the radiator B as powered by the internal combustion engine A; a cowl E forms a transition section to guide the air flow to fan D and a shroud means F is employed to maintain a relatively close clearance with the fan tips.

As shown in FIG. 1, the engine and radiator is each mounted on longitudinally extending parallel supports **16** and **18**, constituting a part of the chassis suspension means. Such mountings usually involve brackets **19, 20** and **21**, with interposed cushion pads, such as that shown at **22, 23, 24** and **25.**

The fan D may comprise a plurality of fan blades **31** characterized by having a flat outer tip **30** and each mounted upon arms **32** radiating from a hub **33** journalled on a shaft **26** driven by the engine. It is known that the less spacing there is between the external diameter defined by the fan tips **30**, and the internal diameter of the shroud means F, the more efficient will be the air flow and the accompanying heat transfer between the air and the coolant flowing through the radiator. However, it is not well known that the optimum clearance or spacing varies with the speed of the air flow.

It has been found that in determining these relative diameters, or spacing, cognizance has to be taken of the fact that with automotive equipment there are times when an unavoidable relative radial movement takes place between the fan and the shroud. Such radial movement most likely occurs when the engine is first started, or the equipment is traveling over rough roads. It has been the custom to overcome the latter problem by providing an excessively wide spacing or clearance between the shroud and fan to accommodate any undue radial movement therebetween. Such spacing inevitably results in a substantial reduction in heat transfer with the fluids flowing through the radiator as compared to what can be obtained if the shroud encompasses only the air stream generated for the particular air velocity and fan construction.

The cowl E is rigidly attached to the radiator B, the radiator in turn is mounted on the support **18** by way of bracket **20.** The cowl is effective in guiding the flow of air from the radiator to the fan so effectively the entire amount of air stream passing therethrough is acted upon substantially by fan. The cowl has a central opening **34** at one end with a flange **36** tapering or extending radially outwardly therefrom to constitute a transition section to a rectangularly formed opening **35** at the opposite end of said cowl, said opening being commensurate with the cooling core of said radiator.

The shroud F is formed of resilient and flexible materials, such as neoprene rubber; the shroud has an outer continuous annular member **37** provided with an annular recess **37a** on its outer surface for journalling in the wall defining opening **34** of the cowl. Extending radi-

ally inwardly from said annular member of the shroud, is a flange **38** which is interrupted at circumferentially spaced locations by a plurality of slots **39.** The flange **38** terminates in an arcuate wall **40** defining an edge or inner periphery.

The slotting of the radially inwardly extending flange **38** is one method by which a plurality of resilient and flexible segments **41** may be defined in juxtaposed position. Each of the segments cooperate to define a variable inner periphery. The cross section of the segments may have the configuration as shown in FIG. **4** which is substantially trapezoidal with the radially inwardly spacing edge or wall **40** being the smallest dimension of the trapezoid.

The spacing **50** between the inner wall **40** and the outer tips **30** of the fan blades is herein defined as being the clearance. During initial start-up conditions of the fan and at particularly low speeds of the engine, such as during idle or low speed operation, the air flow is relatively slow and the clearance **50** should be relatively small, such as that shown in full line in FIG. **4.** As the air flow is increased, due to an increase in speed of the fan, the segments yield to the pneumatic pressure of the air stream thereby bending over and increasing the clearance dimension (as shown in broken outline in FIG. **4**). This is particularly helpful to increase efficiency of heat transfer.

This increase in cooling efficiency results from removing a restriction on ram air which becomes significant at high vehicle speeds. Although ram effect is present at lower vehicle speeds, it does not take on significance as to a cooling efficiency until typically a vehicle speed of **30** miles per hour is achieved. Below this cooling efficiency is primarily dependent on fan induced air flow promoted by a small shroud clearance. Above such speed, efficiency is increased only by arranging to admit said ram air with less obstruction.

We claim:

1. For use in a cooling fan assembly for an automobile, having a fan with rotary impeller blades defining an outer periphery, a shroud comprising:

an annular member having a continuous external diameter and a plurality of juxtaposed segments integrally joined to said member, said segments extending radially inwardly therefrom into close proximity to the outer periphery of said impeller blades, said segments having an arcuate inner edge cooperating together to form an inner periphery for said shroud, said segments being effective to shift in response to an increase in air flow therepast for changing the spacing between said inner periphery and the outer periphery of said impeller blades.

2. The shroud as in claim **1,** in which said member and said segments are each defined from a common resilient member, said segments being defined by slots extending from the inner periphery of said member, said slots being circumferentially spaced about the member.

3. The shroud as in claim **1,** in which each of said segments have a trapezoidal cross-sectional configuration with the inner edge thereof constituting the smallest dimension of said trapezoid.

4. In a motor vehicle having an engine with a radiator cooled by a fan, the radiator being attached to the vehicle chassis independently from said engine, the fan having blades with tips defining a first predetermined circle, the improvement comprising:

a. a cowl having a central opening and a surrounding flange radiating from said opening to provide a guiding transition for air across the face of said radiator, and

b. a shroud extending along and carried by the periphery of said opening, said shroud having resilient and flexible segments each having an inwardly projecting lip residing closely adjacent the circle defined by said blade tips when in the unflexed condition, said segments cooperatively yielding to define a circle of greater diameter than the circle defined by said blade tips in response to an increase in fan speed.

5. The shroud assembly as in claim **4,** in which the segments of said shroud are defined as integral projections of a common resilient shroud ring, the shroud ring having a plurality of circumferentially spaced slots to define said segments.

6. The shroud assembly as in claim **5,** in which the cross-sectional configuration of each of said resilient segments is a trapezoid.

7. The shroud assembly as in claim **6,** in which the fan blades each have a squared outer tip configuration.

* * * * *