Jan. 19, 1932. J. S. JUDELL 1,841,737

COMBINATION FAUCET

Filed Dec. 6, 1926 2 Sheets-Sheet 1

FIG. 1.

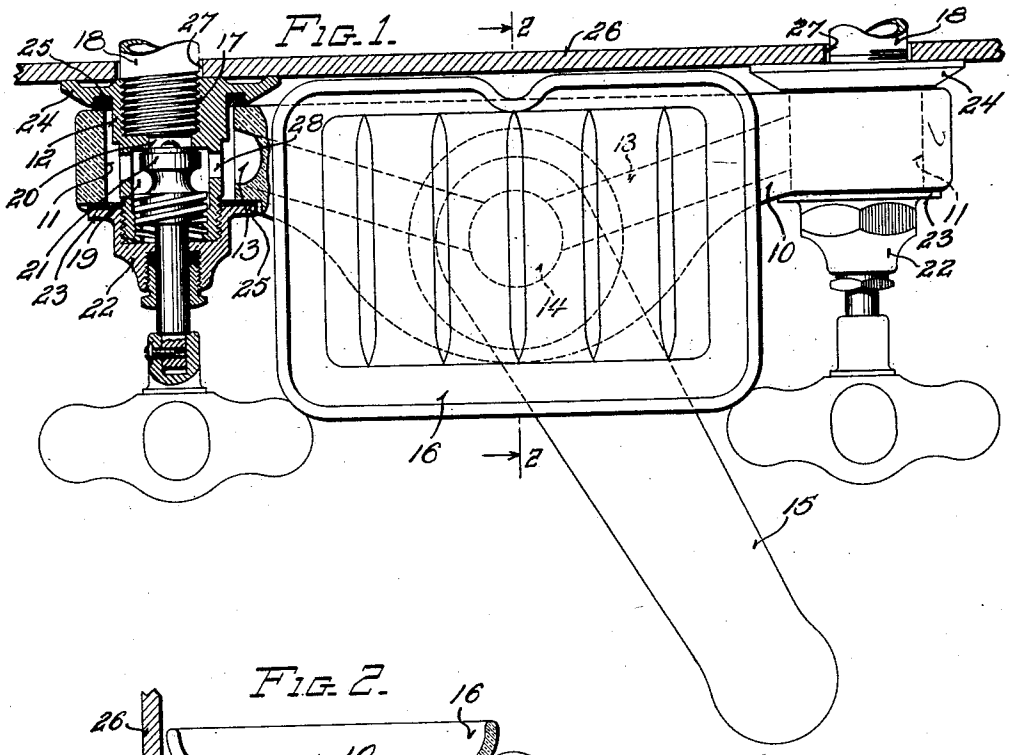

FIG. 2.

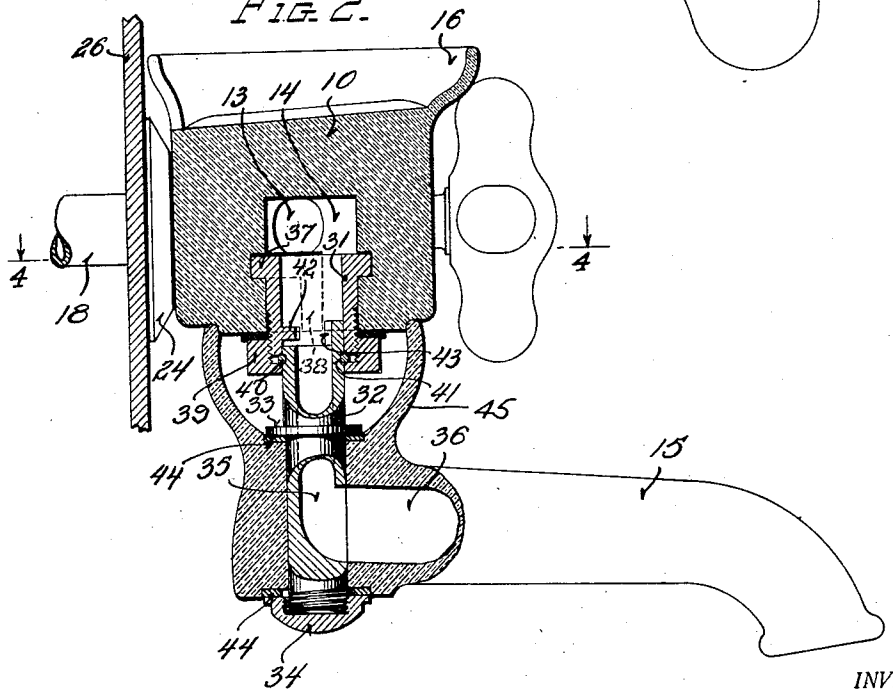

INVENTOR.

JULIUS S. JUDELL.

BY Ralph Lewis

ATTORNEY.

Jan. 19, 1932. J. S. JUDELL 1,841,737

COMBINATION FAUCET

Filed Dec. 6, 1926 2 Sheets-Sheet 2

FIG. 3.

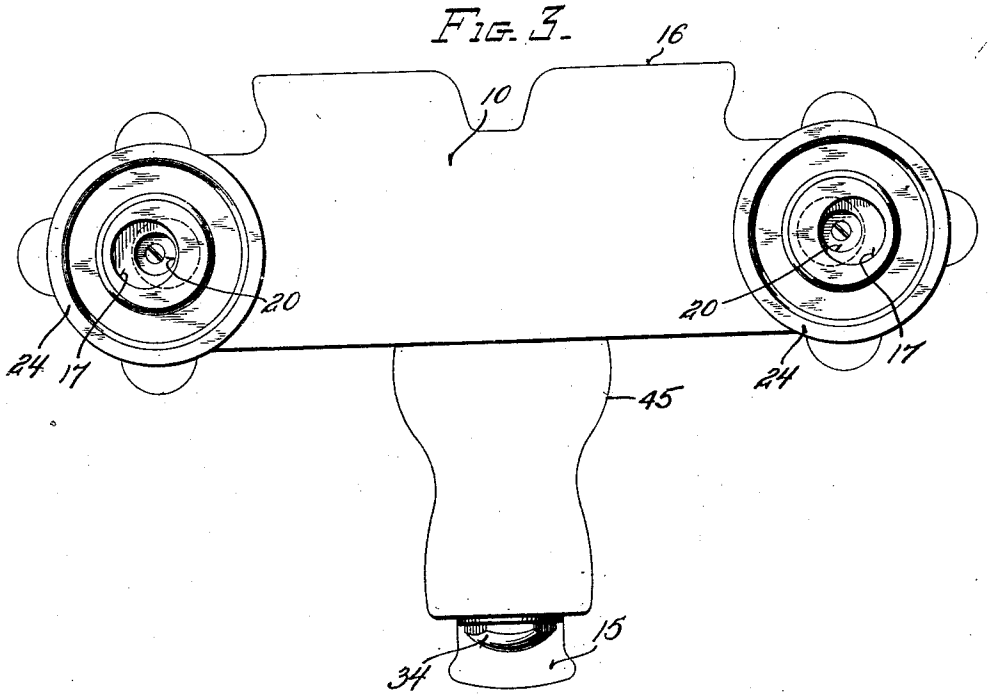

FIG. 4.

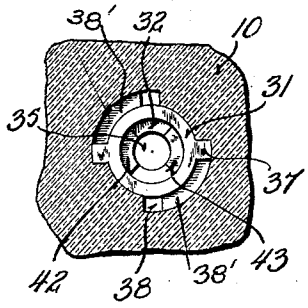

FIG. 5.

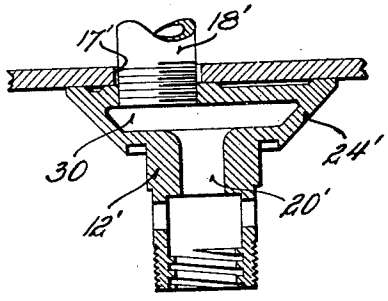

INVENTOR.

JULIUS S. JUDELL

BY Ralph Brown.

ATTORNEY.

Patented Jan. 19, 1932 1,841,737

UNITED STATES PATENT OFFICE

JULIUS S. JUDELL, OF MILWAUKEE, WISCONSIN, ASSIGNOR TO THE MILWAUKEE FLUSH VALVE COMPANY, OF MILWAUKEE, WISCONSIN, A CORPORATION OF WISCONSIN

COMBINATION FAUCET

Application filed December 6, 1926. Serial No. 152,755.

This invention relates to plumbing fixtures of the type commonly known to the trade as combination fixtures.

Such fixtures ordinarily include a body portion having separate inlet openings for connection with hot and cold water supply pipes and a single outlet opening through which the water, either hot or cold or both, received by the body portion is discharged through an appropriate nozzle. The flow of hot and cold water through the fixture is controlled by separate valves each ordinarily disposed between one of the inlet openings and the outlet opening. Such an arrangement requires the use of unions or equivalent connections between the inlet openings of the body portion and the supply pipes, and the limited space between the fixture and wall renders it rather difficult to align the parts with the accuracy required to insure good joints. Furthermore the usual fixed spacing between the inlet openings of the body portion requires adjustable connections of some form or other to compensate for variations in the spacing between supply pipes.

One object of the present invention is the provision of a combination fixture so constructed as to permit direct application thereof to the supply pipes without requiring the use of unions or equivalent connections therebetween.

Another object is the provision of a combination fixture so designed as to permit the use of an all-porcelain body portion.

Another object is the provision of a combination fixture having a novel combination and arrangement of parts by which the fixture is rendered inherently adjustable to permit direct application thereof to supply pipes of various spacings.

Other objects and advantages will appear from the following description of an illustrative embodiment of the present invention.

In the drawings:

Figure 1 is a plan view, partly in section, of a combination fixture constructed in accordance with present invention.

Fig. 2 is a transverse sectional view taken substantially along the line 2—2 of Figure 1.

Fig. 3 is a rear elevation.

Fig. 4 is a fragmentary sectional view taken in the plane of line 4—4 of Figure 2.

Fig. 5 is a fragmentary sectional view of a valve body of modified form.

The fixture selected for illustration comprises a body portion 10 having two substantially cylindrical openings 11 formed therethrough adjacent the opposite ends thereof for receiving two valve bodies 12 of appropriate form. A passage 13 leading from each opening 11 communicates with a central chamber 14 formed in the main body portion and communicating with an appropriate discharge spout 15 through connections to be hereinafter described. Although metal or other appropriate material may be employed the main body portion, in this instance, is of porcelain, and the metal valve bodies are so designed as to insure secure and water tight connection therewith without danger of injuring the porcelain. A soap dish 16 of usual form is also preferably provided and in this instance comprises an integral part of the main body.

Each valve body 12 in this instance comprises a substantially cylindrical casting preferably eccentrically bored and internally threaded at one end 17 to receive a supply pipe 18 and hollowed out at the other end to provide a valve chamber 19, having communication with the supply pipe through a port 20. A valve 21 threaded in the chamber 19 and cooperating with the port 20 controls the flow of water from pipe 18 to the chamber 19. The outer end of the chamber 19 is closed by a cap 22 having a circular flange 23 which cooperates with a flange 24 on the other end of the valve body to bind the valve body in position within the opening 11 and to close the ends of this opening. Appropriate packing rings or washers 25 are preferably employed to seal the openings and to protect the porcelain body portion against the pressure of these metal flanges. The flange 24 is also preferably designed to bear against the usual vertical wall 26 of a sink or the like, to which the fixture is applied, and to cover the usual opening 27 through which the supply pipe 17

projects. Ports 28 maintain an open communication between the chamber 19 and the opening 11, so that water admitted through the port 20 is free to pass from the chamber 19, through ports 28, opening 11, passage 13 and chamber 14 to and through the spout 15.

It will be noted that in the fixture shown the diameters of the valve bodies 12 are somewhat less than those of the openings 11, so that the valve bodies are laterally adjustable therein, and the fixture is thereby rendered adjustable to compensate for slight variations in spacing between the supply pipes 18. Although the degree of adjustability thus provided is entirely sufficient for most installations, provision is made for a still greater range of adjustment by disposing the bore 17 eccentrically of the axis of the valve body. With this eccentric arrangement rotation of the valve bodies within the openings 11 will permit an adjustment of these bores between the extreme positions indicated in full and dotted lines in Figure 3. The fixture is thus adjustable and readily applicable to supply pipes having a wide variation in spacing. A greater eccentricity and hence a still greater range of adjustment may be had by the use of a valve body constructed as shown in Figure 5.

The valve body 12′ shown in Figure 5 is substantially identical with that hereinabove described except that the base 24′ thereof is hollow and of frusto-conical form. The chamber 30 provided within the base 24′ effects communication between the valve port 20′ and a widely offset opening 17′ threaded to receive a supply pipe 18′. It is obvious that due to the greater eccentricity of the opening 17′ rotation of this valve body will effect a greater range of adjustment than will the valve body first described.

In applying the fixture the caps 22, carrying the valves 21, are removed from the valve bodies 12, and the valve bodies are withdrawn from the body portion 10 and separately applied to the supply pipes 18 by screwing the same directly onto the ends thereof. No unions are required. The two valve bodies are then rotated sufficiently about their eccentric connections with the supply pipes until their spacing corresponds to the spacing between the openings 11 in the body portion 10, after which the body portion is applied thereto and clamped in position thereon by reapplying the caps 22 to the valve bodies.

The spout 15 is preferably of porcelain to match the body portion 10 although it may be made of metal or other appropriate material. In this instance the spout is mounted upon the body portion so as to swing through a limited angle about a substantially vertical axis in a manner well known in the trade. The means for attaching this spout is novel however and will now be described. As shown in Figures 2 and 4 the central chamber 14 is of cylindrical form and opens through the bottom of the body portion 10. A bushing or sleeve 31, removably fixed within this chamber, provides a support for a vertical shaft 32, swiveled at its upper end therein, and projecting at its lower end through the spout 15. The spout is removably fixed to this shaft between a collar 33 and a nut 34 applied to the lower extremity thereof. A passage 35 within the shaft maintains communication between the chamber 14 and the passage 36 in the spout. The bushing 31 in this instance has a bayonet slot connection with the interior of the chamber 14 formed by a pair of lateral lugs 37 on the bushing shaped to follow a pair of vertical grooves 38 and communicating horizontal grooves 38′ formed in the wall of the chamber. An appropriate cap 39 threaded onto the lower end of the bushing clamps the same in fixed position within the chamber and cooperates with a split ring 40, seated within an annular groove 41 in the shaft 32, to retain the shaft in the bushing. Appropriate lugs 42 and 43 on the bushing and shaft cooperate to limit rotation of the shaft and thus limit the swinging action of the spout. Appropriate packing rings or gaskets 44 are preferably interposed between the cap 39 and body portion 10 and between the spout and coacting collar 33 and nut 34 to seal the joints and to prevent injury to the porcelain by positive contact of the metal parts therewith. Provision is also preferably made for concealing the metal parts by the use of an appropriate bell 45 which in this instance is shown formed integral with the spout.

Various changes may be made in the embodiment of the invention hereinabove specifically described without departing from the invention as defined in the appended claims.

I claim:

1. A combination fixture comprising a body portion of vitreous material having passages therein, valves for controlling the admission of liquid to said passages, a discharge spout, a bushing fixed in said body portion, a shaft rotatably supported in said bushing for supporting said spout, and a passage in said shaft through which said spout communicates with said passages.

2. A combination fixture comprising a body portion of vitreous material having passages therein, valves for controlling the admission of liquid to said passages, a discharge spout of porcelain or the like, a metal bushing fixed in said body portion, a metal shaft rotatably supported in said bushing for supporting said spout, and a passage in said shaft for effecting communication between said spout and passages.

3. In a plumbing fixture the combination

of a body portion of vitreous material having a passage therein, a discharge spout of porcelain or the like, a bushing seated in said body portion and having a bayonet slot connection therewith, a shaft rotatably supported in said bushing for supporting said spout, and a passage in said shaft for effecting communication between said spout and passage.

4. A combination fixture comprising a body portion having passages therein, a swing spout communicating with said passages, openings in said body portion communicating with said passages, valve bodies freely projectable lengthwise through said openings, clamping means for said valve bodies cooperating with said body portion to close said openings, and valves in said valve bodies for controlling the admission of water to said passages.

5. A combination fixture comprising a body portion of vitreous material having a pair of liquid conducting passages formed therein, a swing spout supported by said body portion and communicating with both of said passages, lateral openings in the ends of said body portion communicating with said passages respectively a pair of metal sleeves seated in said openings respectively and also communicating with said passages respectively, and a valve seated in each sleeve for controlling the admission of water to said passages.

6. A combination fixture comprising a body portion having a pair of longitudinal passages formed therein, a common outlet for said passages, transverse openings adjacent the ends of said body portion and communicating with said passages, a sleeve freely projectable lengthwise through each transverse opening, each sleeve being threaded at one end to receive a supply pipe, a flange adjacent said threaded end of each sleeve, valves within said sleeves, and clamping means on the other end of each sleeve for retaining the same in said transverse passage and releasable to permit free withdrawal of said body portion from said sleeves.

In witness whereof, I hereunto subscribe my name this 2nd day of December, 1926.

JULIUS S. JUDELL.