April 9, 1963 W. ABT 3,084,396

METHOD OF MAKING A DREDGER

Original Filed Feb. 13, 1959 2 Sheets-Sheet 1

FIG. 1.

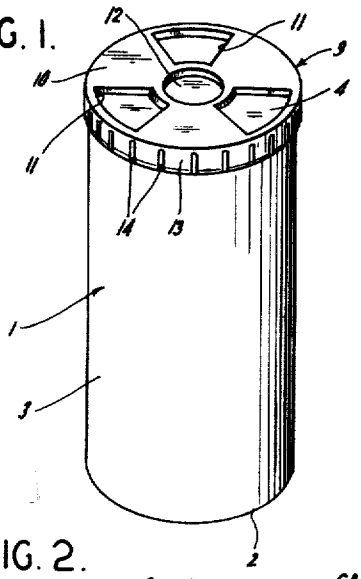

FIG. 3.

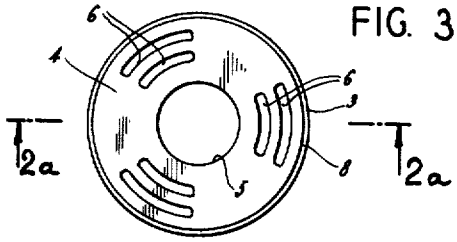

FIG. 4.

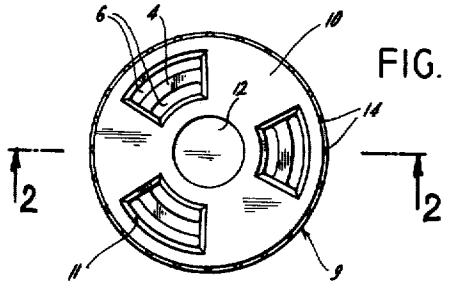

FIG. 2.

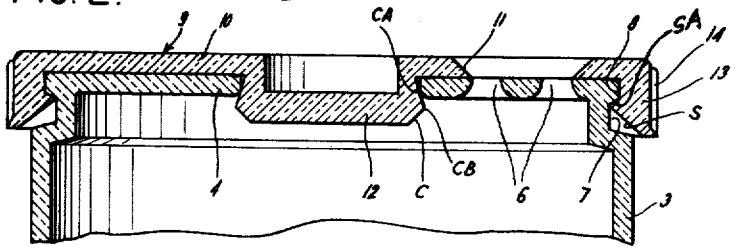

FIG. 5.

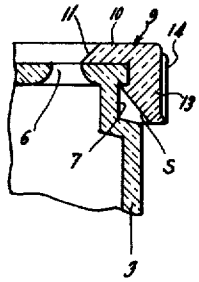

FIG. 2a.

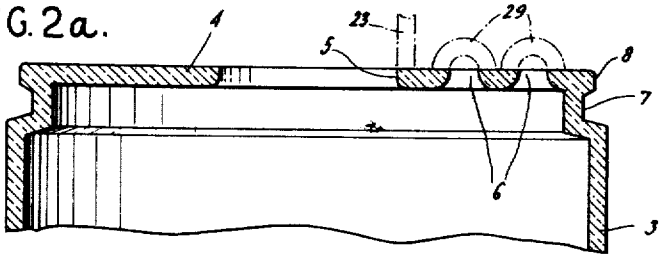

FIG. 6.

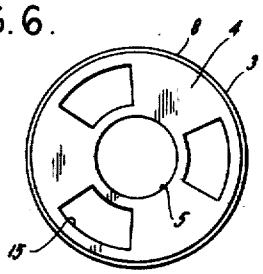

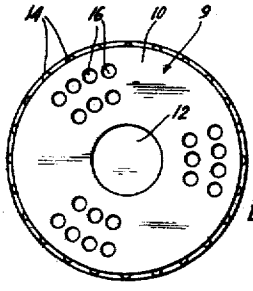

FIG. 7.

INVENTOR.
WALTER ABT
BY Blum, Moscovitz, Friedman & Blum
ATTORNEYS

April 9, 1963 W. ABT 3,084,396

METHOD OF MAKING A DREDGER

Original Filed Feb. 13, 1959 2 Sheets-Sheet 2

FIG. 8.

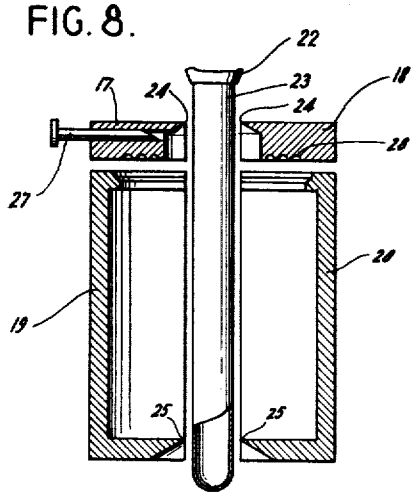

FIG. 9.

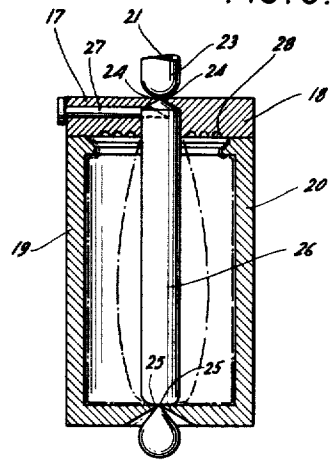

FIG. 10.

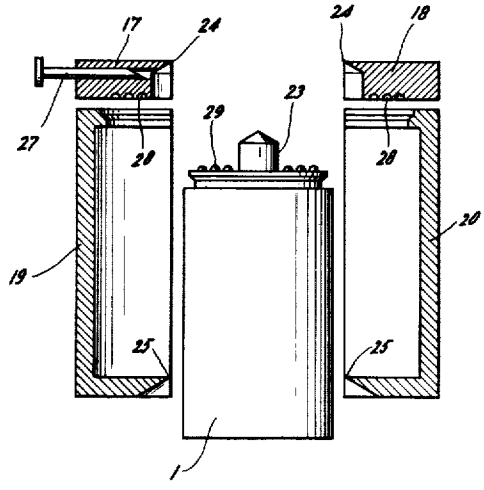

FIG. 12.

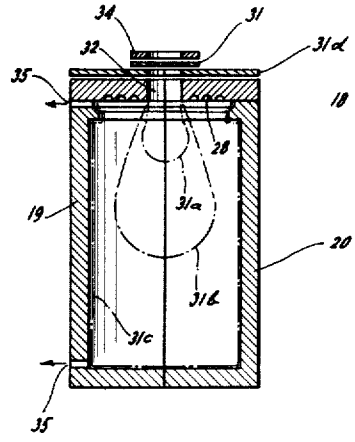

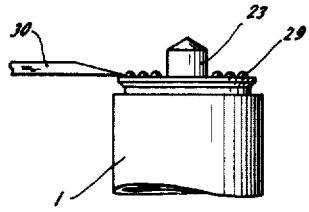

FIG. 11.

INVENTOR.
WALTER ABT
BY Blum, Moscovitz, Friedman & Blum
ATTORNEYS

United States Patent Office 3,084,396 Patented Apr. 9, 1963

3,084,396

METHOD OF MAKING A DREDGER

Walter Abt, Vevey, Switzerland, assignor to Afico S.A., La Tour de Peliz, Switzerland, a company of Switzerland

Original application Feb. 13, 1959, Ser. No. 793,178, now Patent No. 3,058,630, dated Oct. 16, 1962. Divided and this application Feb. 13, 1961, Ser. No. 99,001

4 Claims. (Cl. 18—55)

The object of the present invention is a dispenser or dredger device for dispensing powdered products, such as ground spices. This device may be a one-piece container whose wall is provided with perforations for dispensing the powdered material, and an opening for filling said container. The perforations can be closed by a rotary perforated cover. The invention also relates to methods for manufacturing the dispensing device.

Known dredgers or devices of this type generally consist of a hollow tumbler-shaped body which is provided with a detachable bottom or a detachable top. Hence, the complete old-type device is composed of at least two separable parts. If the bottom or top of the well-known device is detachable, a filling opening is superfluous. In these known devices, the dredging or dispensing perforations are located in either the separable bottom of the tumbler-shaped body or in the separable top of said body. The rotary cover of the old device is turnably connected to the center of either the bottom or the top by means of a pivot rivet or similar pivot fastening, or to the outer rim of the container. When these known devices have a special filling opening, it is located at the end which is opposite the dredging perforations.

In distinction, the new device which is the object of the present invention is characterized by the fact that the new container has a hollow one-piece body, said body being entirely closed except for the filling opening and the dispensing perforations. The top wall of this new one-piece container is a disc which has a filling opening and also has the dispensing perforations. The outer rim of this disc is integrally joined to the body of the container by a groove. This one-piece body is provided with a detachable and turnable cover which is located at the top wall of the one-piece container. At the middle of the inside face of the detachable and turnable cover, said cover has a projection which enters the container through the filling opening. The edge of said projection fits under the edge-wall of said filling opening. The cover has a flanged edge which turnably grips the rim of the said top disc. Also, the invention concerns a process for the manufacture of the device, according to which the one-piece container is shaped in a hollow mold, from a body or sheet of organic thermoplastic synthetic material which is rendered temporarily plastic and deformable by heat.

The one-piece container can be shaped in a mold by inflating a bubble of said heated thermoplastic material on a mold, until the wall of the hot bubble contacts with the inner face of the mold. This mold consists of a plurality of separable sections, which can be separated after the shaped bubble has cooled and hardened. The bubble is thus shaped to provide it with a neck and with inflations or hollow ribs adjacent its neck. The height of these inflations is greater than the thickness of the wall of the shaped bubble. The neck and the inflations

are sheared off the shaped bubble by external shearing means. The external shearing of the neck provides the filling opening. The external shearing of the hollow ribs provides the dispensing perforations of the one-piece container.

The invention is further explained in the following description and in the annexed drawings.

FIG. 1 is a perspective view of the assembled device, with its rotary cover in closed position.

FIG. 2 is a section on the line **2**—**2** of FIG. 4.

FIG. 2*a* is a section on line 2*a*—2*a* of FIG. 3.

FIG. 3 is a top plan view of the body of the device with the rotary cover removed.

FIG. 4 is a top plan view of the device with its rotary cover in open position.

FIG. 5 shows a variation of FIG. 2.

FIG. 6 shows a variation of FIG. 3.

FIG. 7 shows a variation of FIG. 4.

FIGS. 8, 9 and 10 show three steps of the manufacture of the one-piece container according to the first manufacturing method.

FIG. 11 illustrates the shearing step.

FIG. 12 illustrates another method of making the one-piece container.

In these drawings, "**1**" designates a container which has a hollow one-piece body, which can be made of an organic thermoplastic plastic, such as polyvinyl chloride. This one-piece container **1** has a closed lateral bottom wall **2**, a longitudinal cylindrical wall **3**, and a disc-shaped top wall **4**. Top wall **4** has a round filling opening **5** in its center. In FIG. 3, said top wall **4** has six dredging perforations in the form of elongated holes **6** which are arranged in two concentric circles relative to the vertical axis of the filling opening **5**. These holes **6** are arranged in pairs in three sections. Directly below the top wall **4**, the longitudinal wall **3** of the container has a recess or groove **7**. The top wall **4** has a rim **8**.

The container **1** is provided with a cover **9**, which is rotatable around the longitudinal axis of cylindrical wall **3**. This cover **9** is made of hard but elastic or resilient synthetic material, such as a suitable organic plastic. Said rotatable cover **9** has dispensing openings **11** in its top wall.

Said cover **9** has an inward, axial, plug-shaped projection **12**, which has frusto-conical faces C and CA, which are integral at their bases, at the circular line CB, which is in a plane which is perpendicular to the longitudinal axis of the cylindrical wall **3**.

The diameter of the circular line CB is slightly greater than the diameter of the filling opening **5** of the top wall **4**. Due to its resilience, the plug-shaped projection **12** yields sufficiently under pressure, so that the plug-shaped projection **12** can be forced axially through filling opening **5**, into the position shown in FIG. 2, in which a part of the upper frusto-conical face CA of plug-shaped projection **12** abuts the cylindrical edge-wall of filling opening **5**. When projection **12** is thus fully inserted, the entire line CB is located below the filling opening **5**, and the upwardly-tapered frusto-conical face CA resiliently exerts a downward latching force upon cover **9**, thus maintaining the planar bottom wall of cover **9** pressed tightly against the planar top face of top wall **4**.

The cover **9** has an outer flange **13** on which there is a series of small gripping projections **14**. In FIG. 2,

the inside wall of the flange **13** consists of two surfaces S and SA in the shape of truncated cones. The lower surface S widens towards the bottom. The upper frusto-conical surface SA widens towards the top. The diameter of the circular border at which these frusto-conical surfaces S and SA meet is slightly less than the maximum diameter of rim **8** of the container. However, the resilient flange **13** expands temporarily when the cover **9** is placed under pressure on the container, so that the temporarily expanded flange **13** slips over rim **8** and fits under rim **8** in groove **7**. Since the upper inside face SA of flange **13** widens towards the top, the elastic expansion of flange **13** which results when the rotatable cover **9** is seated upon the body of the container, results in a seating force which also draws the edges of cover **9** downwardly towards the top **4** of the container **1**.

Thus, cover **9** is drawn downwards towards the top **4** of the container both at the center of said cover **9** and its edge, the result being that the parts of cover **9** which are located between flange **13** and projection **12**, especially the webs **10** of cover **9** which are between its windows **11**, contact tightly with the top **4**. When cover **9** is turned so that the webs **10** of cover **9** are situated over the openings **6** of top **4**, said cover **9** hermetically closes container **1**.

By turning cover **9** on its longitudinal axis, the windows **11** of cover **9** can be put into registration with openings **6**, permitting the powdered product in the container **1** to be shaken out. As shown in FIG. 2, the openings **6** have substantially sharp edges at the upper surface of the top wall **4** of the container. These openings **6** widen downwardly. This results from the manufacturing process, which will be later explained.

The powder particles which enter openings **6** when the cover **9** of the container is in closed position, and which may stick under the webs **10** of cover **9**, are scraped off by the sharp edges of these openings **6** and fall back into the container **1** when said container is opened by turning cover **9**. For this reason, the particles cannot stick between top **4** and the cover **9**. Such sticking would hinder and prevent the sealing action of the cover **9**. Also, if such particles stick, they become soiled, and the soiled particles will drop into the food.

Rotary cover **9** is placed on the container **1** after said container has been filled through filling opening **5**. Care must be taken that the projection **12** as well as the flange **13** fit, in the manner described, respectively in the filling opening **5** and in the groove **7**. To fill the device, cover **9** of the container **1** is temporarily removed by pulling cover **9** in the direction of the vertical axis of the container, thus drawing the central projection **12** out of the filling opening **5** and pulling the flange **13** out of the groove **7** and out of engagement with rim **8**.

In the variation shown in FIG. 5, the angle of the lower surface SA of rim **8** is such that the apex of the cone which is formed by this surface is located outside of the body of the container and above the level of the rim **8**. The wedging effect between flange **13** and rim **8**, and therefore the tight contact of the cover **9** with the top **4**, is thus improved.

In the variation shown in FIGS. 6 and 7, the top **4** of the container **1**, instead of having six elongated dispensing openings, has three annular dispensing perforations **15**; and the cover **9**, instead of windows **11**, has three groups of round holes **16**.

In the manufacture of the body of the improved device in connection with the present invention, the following process is preferably used. A sheet of organic thermoplastic synthetic material in the form of a bubble, said bubble being rendered plastic and expansible by heating, is blown in a hollow mold by excess internal pressure until the outer wall of the hot and expanded bubble contacts closely with the inner wall of the mold. The plastic material of the bubble thus takes and retains the shape of the inner face of the mold by cooling and hardening the wall of the bubble in contact with said inner wall.

FIGS. 8–11 inclusive illustrate one manufacturing process. The mold includes two lower and identical halves **19** and **20**, whose bottom walls have adjacent sharp and identical edges **25**. The mold also includes two upper and identical halves **17** and **18**, whose upper walls have identical straight sharp edges **24**. FIG. 8 shows the separated positions of said mold parts **17**, **18**, **19**, **20**. The lower faces of the upper mold parts **17** and **18** have recesses **28**, which correspond to the dispensing recesses **6** which are shown in FIG. 3 at the top **4** of the one-piece body.

While the mold-parts are in the separated positions shown in FIG. 8, a hollow tube **23** of hot and plastic organic thermoplastic material, such as polyvinyl chloride, is extruded from a conventional extrusion nozzle **22**. This extrusion step is old and well known. When the tube **23** has been extruded to the desired length, which is shown in FIGS. 8 and 9, the upper mold halves **17** and **18** are first moved downwardly to contact with the lower mold halves **19** and **20**, as illustrated in FIG. 9, and the parts of the mold are then moved horizontally towards each other to the relative position of FIG. 9.

When the lower mold halves **19** and **20** are thus moved horizontally towards each other, their straight and sharp and lateral edges **25** pinch and weld and cut the hot and plastic tube **23** close to the bottom end of said tube **23**, as illustrated in FIG. 9.

When said upper mold halves **17** and **18** are then moved horizontally towards each other in unison with the lower mold halves **19** and **20** while upper mold halves **17** and **18** contact with lower mold halves **19** and **20**, the straight and sharp and lateral edges **24** of said upper mold halves **17** and **18** pinch and weld and cut the hot and plastic extruded tube **23** close to its top end **21**.

As illustrated in FIG. 9, a hot and plastic and expansible cylindrical bubble **26** is thus severed from the extruded cylindrical tube **23**. Said cylindrical bubble **26** is closed at its top and bottom welded ends, at edges **24** and **25**.

A hollow needle **27** is now actuated in a horizontal bore of the lower mold-part **19**, in order to perforate the wall of the hot and plastic and expansible bubble **26**.

Compressed air is introduced through needle **27** into the bubble **26** which is still hot and plastic and expansible, thus causing excess internal pressure within said bubble **26**. This excess internal air pressure causes the bubble **26** to expand, while the air in the closed mold between the bubble **26** and the internal wall of the closed mold escapes through the joints of the closed mold. The bubble **26** is thus inflated until its wall contacts completely with the inner wall of the closed mold which is shown in FIG. 9, and the hot and plastic wall of the bubble **26** cools and hardens in contact with the relatively cold inner surface of the closed mold. This forms a one-piece container, which is finished by the shearing action shown in FIG. 11. When the bubble **26** has cooled and hardened, the mold is opened and the container **1** is removed. The same operation is carried out to make more containers.

The recesses or depressions **28** are entered by respective hollow ribs or inflations **29** of the top part of the inflated bubble **26**. These top inflations **29** of the inflated bubble **26** are indicated in broken lines in FIG. 2*a*. The height of each top hollow rib or inflation **29** is at least equal to the thickness of the wall of the inflated bubble, and said height may be greater than said thickness.

Each cooled body **1** which has been thus shaped from the plastic tube **23** is then freed from the connected part of said tube **23** and from the ribs **29**, in a single operation, by means of a shearing instrument **30** (FIG. 11), which shears off all excess material projecting beyond the flat surface of the top **4**. This shearing instrument **30** shears off the end of tube **23** which remains attached to

the edge of the filling opening **5**, and also shears off the inflations or hollow ribs **29** of top **4** to form the dredging of dispensing perforations **6**.

In the alternative manufacturing process which is illustrated in FIG. 12, the lower-mold part **19** has outlet channels **35** for permitting the escape of air from the closed mold. In this embodiment of FIG. 12, the bottom walls of lower mold-halves **19** and **20** have straight and blunt adjacent lateral edges, and the upper mold-halves **17** and **18** have adjacent blunt and identical semi-cylindrical edges, which define a central cylindrical bore **32** when the mold is in the closed position of FIG. 12.

The lower faces of the upper mold-halves **17** and **18** have the previously mentioned recesses **28**. The starting material in the process of FIG. 12 is a flat, imperforate disc **31**, which is made of an organic thermoplastic, such as polyvinyl chloride. The apparatus of FIG. 12 includes a top clamping member **31***d* which has a central, axial, cylindrical bore, which registers with the bore **32**. The original flat, imperforate, thermoplastic disc **31** is suitably heated, as by means of infra-red rays, until the entire disc **31** is softened to be extensible and moldable. The annular head **34** has a central cylindrical perforation, which registers with bore **32**. The annular head **34** is used to clamp the annular peripheral portion of the soft and hot disc **31**, against the member **31***d*, which is held fixed relative to the assembled upper mold parts **17** and **18**.

While the annular peripheral portion of the hot and soft disc **31** is thus held fixed relative to the upper mold parts **17** and **18**, and while said upper mold parts **17** and **18** are held fixed relative to the lower closed mold parts **19** and **20** in the positions of FIG. 12, a vacuum is created in the space between the closed mold halves **19** and **20**, by means of channels **35**.

The vacuum will draw the central, unclamped, imperforate part of the hot disc **31** into the aligned central bores of the assembled top member **31***d*, and of the assembled upper mold members **17** and **18**, to form successive expanding bubbles illustrated by **31***a* and **31***b* in FIG. 12, until the expanded bubble has the final shape **31***c*, in which said bubble fits against the inner cylindrical face of the assembled mold halves **19** and **20**, and the inflations or hollow ribs **29** are also formed. The mold parts are separated after the bubble **31** has cooled and hardened. The shaped container which is thus made has substantially the shape shown in FIG. 10.

The above-mentioned external shearing operation is then used to finish the top of the one-piece container which is thus formed, in order to provide the central filling opening **51** and the dispensing openings **6** or **16**. The top member **31***d* may be sectional and consist of separable parts, like the sectional and separable members **17** and **18**.

Instead of using a vacuum on the inside of the mold **19—20** in the process of FIG. 12, an excess pressure can be exerted on the outside of disc or membrane **31**, in which case the air can escape from the interior of the mold through the channels **35** to the outside of the mold, or as shown in the embodiment of FIGS. 7 to 10, through the joints of the assembled mold parts.

If the container **1** of the improved device is manufactured according to either of these processes, its opening **5** has a triple function. Said opening **5** serves as a filling opening for the powdered product. The wall of opening **5** grips the projection **12** which serves as a pivot for the rotatable cover; and during the manufacture of the container, said opening **5** serves to introduce air by means of which the bubble of organic synthetic thermoplastic plastic or resin, which is shaped from either tube **23** or disc **31**, is given the form of the container **1**.

In the manufacturing processes described, the filling opening **5**, like the dispensing perforations **6** or **16**, is obtained without using a punching tool, so that it is never necessary to work with a tool on the inside of the top **4**. In this way it is possible to manufacture the top **4**, the cylindrical part **3**, and the bottom **2** of the container in one piece, thus making large-scale and economical manufacture possible.

Top **4** and cover **9** are not necessarily flat. Top **4** may be in the form of a part of a sphere or a part of an ellipsoid.

I have thus provided a finished dredging device which includes a one-piece, hollow container, which has a filling opening and at least a single dispensing opening in the one-piece molded wall of said hollow container. Said one-piece wall is originally molded with original, hollow and outwardly extending respective projections at the marginal wall of said filling opening and at the marginal wall of each said dispensing opening.

In the finished dredging device, the marginal wall of the filling opening and the marginal wall of each dispensing opening is at the sheared base of the respective hollow and outwardly extending original projection. The invention includes this one-piece, hollow container, irrespective of other combinations disclosed herein.

This application is a division of my co-pending application Serial No. 793,178, filed February 13, 1959, for Dredger and Method of Making the Same, now Patent No. 3,058,630.

What is claimed is:

1. A method of making a hollow one-piece dredging container which has a filling opening and at least one dredging perforation in the top wall thereof, comprising the steps of expanding a heated thermoplastic member within a mold having at least one recess in a wall thereof to take the shape of the cavity defined by the mold and to form a preformed member having a hollowed projection formed in said recess and a connecting part extending from the top wall thereof, cooling said preformed member, removing the preformed member from said mold, and thereafter severing said hollowed projection and connecting part from said preformed member to form said container with said severed projection defining said dredging perforation and said severed connecting part defining said filling opening.

2. A method of making a hollow one-piece dredging container which has a central filling opening and at least one dredging perforation disposed in a common plane of the top wall thereof, comprising the steps of expanding a heated thermoplastic member in a mold to take the shape of the cavity thereof and to form a preformed member having hollowed projections and a central connecting part extending from the top wall thereof, cooling said preformed member, removing said preformed member from said mold, and transversely shearing at the plane of said top wall said projections and connecting part to form said container with said severed projections defining said dredging perforation and said severed connecting part defining said central filling opening.

3. A method of making a hollow one-piece dredging container which has a central filling opening and at least one dredging perforation disposed in a common plane of the top wall thereof, comprising the steps of extruding a tube of heated thermoplastic material into a mold, blow molding said tube to expand the same to conformity with the cavity of the mold to form a preformed member having at least one hollowed projection concentrically rising from a point in the top wall of said container and a central connecting part extending from the top wall thereof, cooling said preformed member, removing the preformed member from said mold, and transversely shearing said projection and connecting part to form said container with said severed projection defining said dredging perforation and said severed connecting part defining said central filling opening.

4. A method of making a hollow one-piece dredging

container which has a central filling opening and a series of dredging perforations disposed in a common plane of the top wall thereof, comprising the steps of extruding a tube of heated thermoplastic material into a mold, blow molding said tube to expand the same to conformity with the cavity of the mold to form a preformed member having a series of hollowed projections and a central connecting part extending from the top wall thereof, cooling said preformed member, removing said preformed member from said mold, and transversely shearing in a single operation at the plane of said top wall said projections and connecting part to form said container with said severed projections defining said dredging perforations and said severed connecting part defining said central filling opening.

References Cited in the file of this patent

UNITED STATES PATENTS

2,541,249	Hobson	Feb. 13, 1951
2,597,558	Bailey	May 20, 1952
2,724,672	Rubin	Nov. 22, 1955
2,943,349	Adams et al.	July 5, 1960
2,991,500	Hagen	July 11, 1961
2,994,108	Bjorksten	Aug. 1, 1961
3,015,856	Cohn	Jan. 9, 1962