E. FEUILLETTE.

DRYING APPARATUS.

APPLICATION FILED JAN. 6, 1914.

1,108,565.

Patented Aug. 25, 1914.

4 SHEETS—SHEET 1.

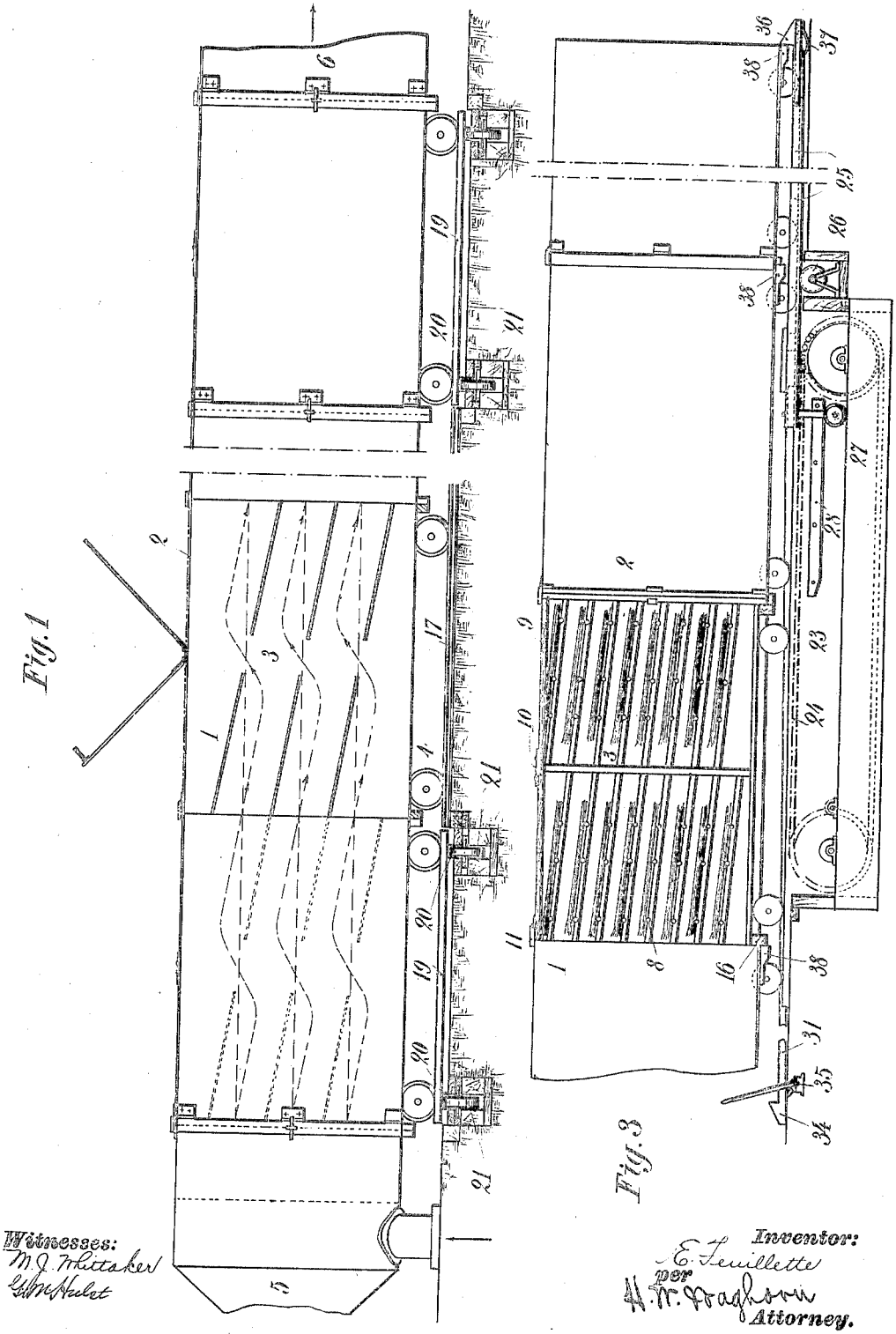

Witnesses:
M. J. Whittaker
G. M. Hulet

Inventor:
E. Feuillette
per
H. W. Waghorn
Attorney.

E. FEUILLETTE.

DRYING APPARATUS.

APPLICATION FILED JAN. 6, 1914.

1,108,565.

Patented Aug. 25, 1914.

4 SHEETS—SHEET 2.

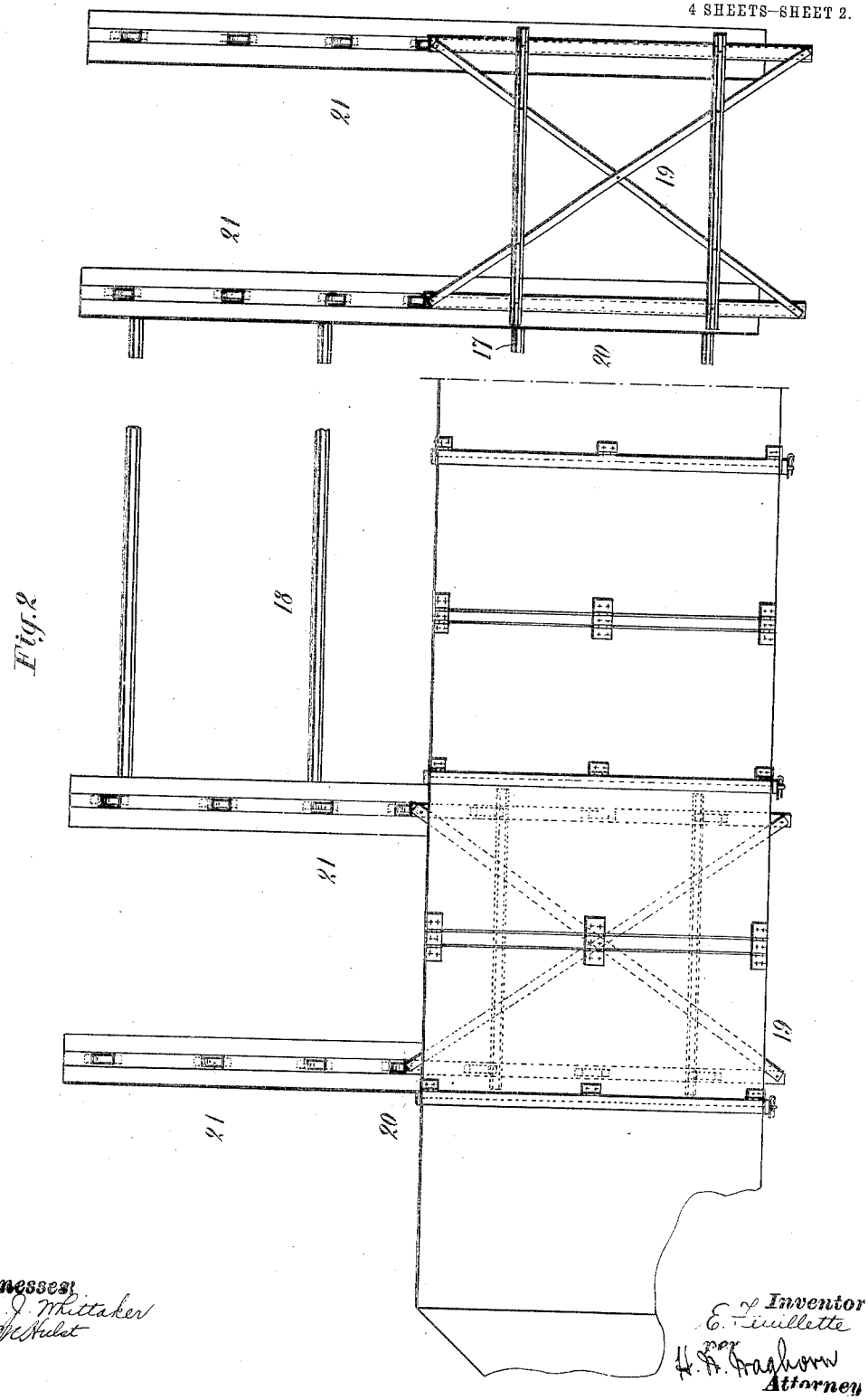

Fig. 2

Witnesses:
M. J. Whittaker
G. W. Hulst

Inventor
E. Feuillette
per
H. H. Fraghorn
Attorney

E. FEUILLETTE.

DRYING APPARATUS.

APPLICATION FILED JAN. 6, 1914.

1,108,565.

Patented Aug. 25, 1914.

4 SHEETS—SHEET 3.

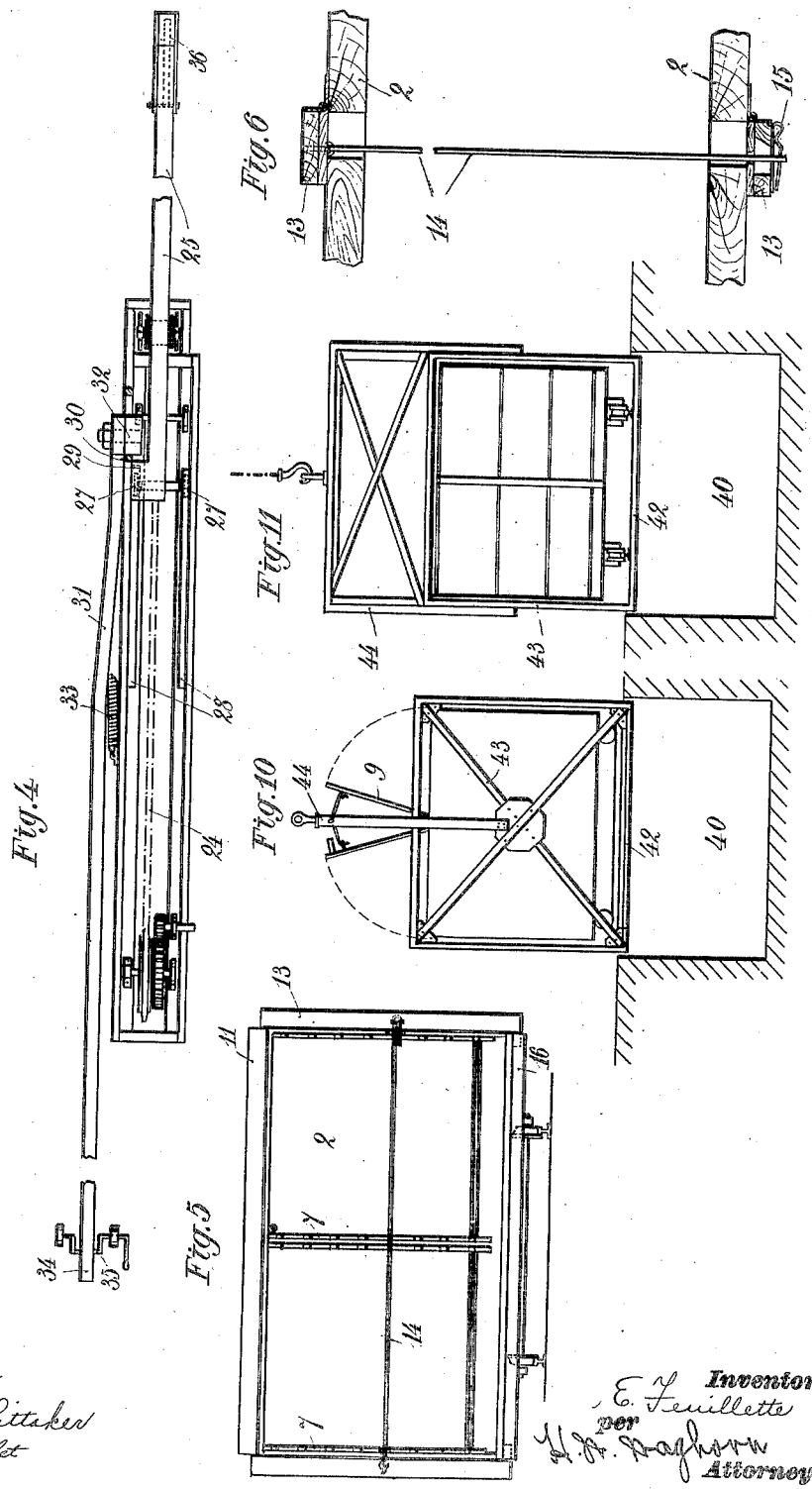

Witnesses:
M. J. Whittaker
G. McHulst

Inventor:
E. Feuillette
per
H. W. Waghorn
Attorney.

E. FEUILLETTE.

DRYING APPARATUS.

APPLICATION FILED JAN. 6, 1914.

1,108,565.

Patented Aug. 25, 1914.

4 SHEETS—SHEET 4.

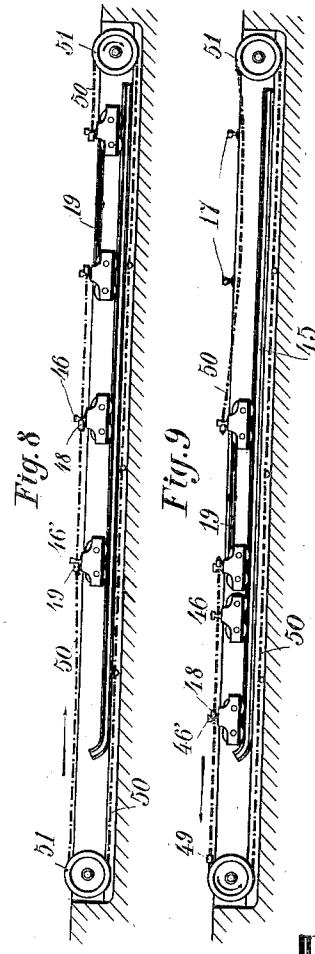

Fig. 8

Fig. 9

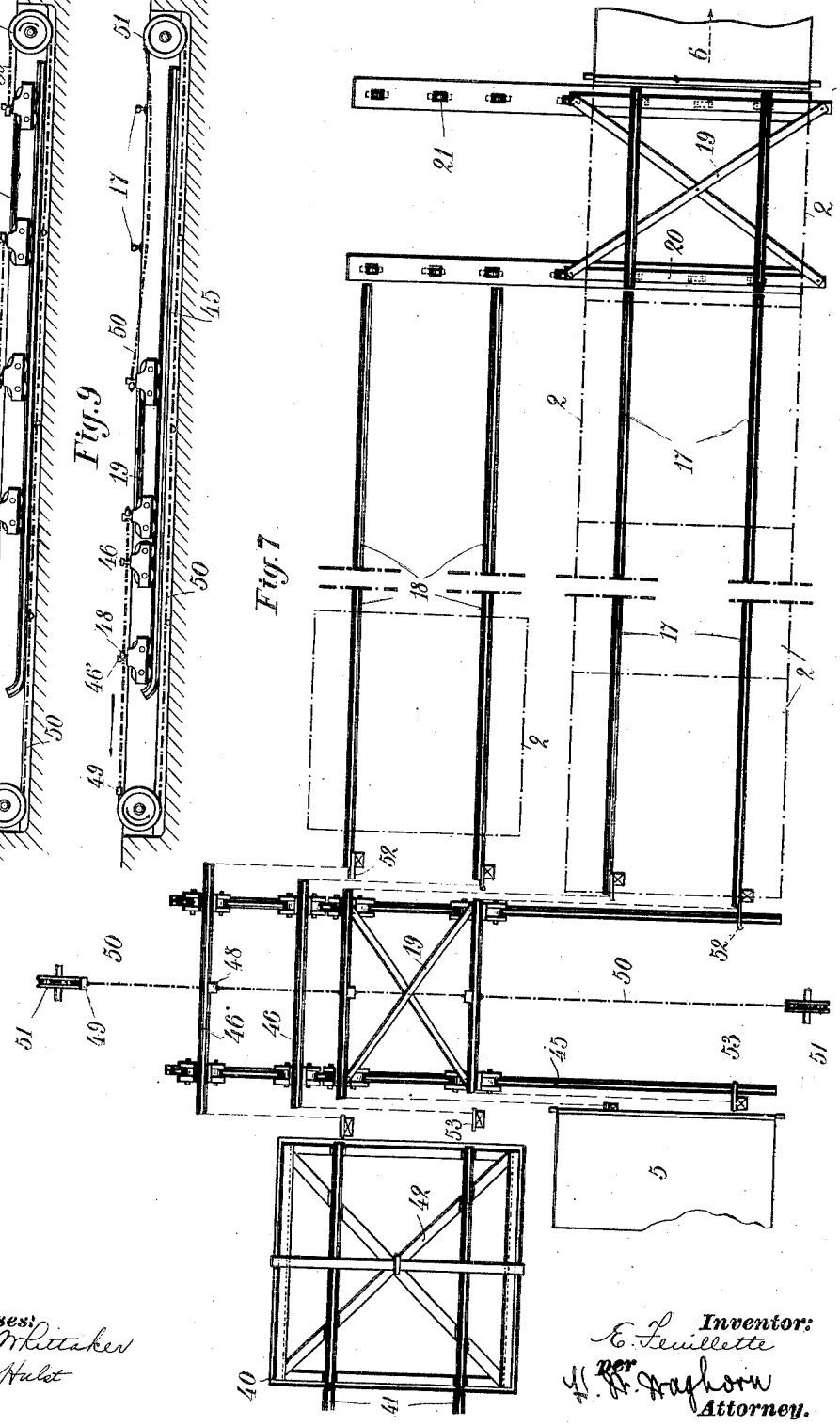

Fig. 7

Witnesses:
D. J. Whittaker
G. M. Hulst

Inventor:
E. Feuillette
per
W. H. Hayhorn
Attorney.

UNITED STATES PATENT OFFICE.

EMILE FEUILLETTE, OF BOULOGNE-SUR-SEINE, FRANCE, ASSIGNOR TO SOCIETE ETABLISSEMENTS E. FEUILLETTE, OF BOULOGNE-SUR-SEINE, FRANCE.

DRYING APPARATUS.

1,108,565. Specification of Letters Patent. Patented Aug. 25, 1914.

Application filed January 6, 1914. Serial No. 810,602.

To all whom it may concern:

Be it known that I, EMILE FEUILLETTE, a citizen of the French Republic, residing at 40 Rue d'Aguesseau, Boulogne-sur-Seine, in the Republic of France, have invented certain new and useful Improvements in Drying Apparatus, of which the following is a specification.

This invention relates to drying apparatus and more particularly drying apparatus for the treatment of textile materials.

It is known that in order to effect a methodical drying of a textile material or a material of any other kind, it is necessary to subject this material progressively to temperatures that increase in proportion as its condition of siccity increases. In order to carry out this operation, it is the general practice to displace the materials to be treated in an oven, a heating chamber, a tunnel or the like, this displacement taking place in the opposite direction to the direction in which the heating agent effecting the drying, flows. Certain difficulties arise, however, as regards the complete utilization of the properties of the calorific agent and in obtaining uniformity of the temperatures existing in any given section of the tunnel. In point of fact the displacement of the material to be treated is obtained by arranging it upon devices which move in the stationary heating chamber. It follows that the free space that it is practically indispensable to leave between the conveyer and its envelop, affords a direct passage for a considerable portion of the calorific agent, the incompletely utilized properties of which are a cause of diminution of efficiency which would render costly the drying of materials in general and of textile materials in particular; another point is that, as the air or other hot fluid tends to rise; it is obvious that, in any given section of the drying chamber, the upper portion of this chamber will be at a higher temperature than the lowest portion. Consequently, notwithstanding the circulation of the material to be treated in the gaseous current and the best utilization of the heat resulting therefrom, it is impossible to effect uniform drying; the lower layers of the material treated remain charged with moisture to a greater extent than the upper layers. With the object of obviating these defects it has been proposed either to vary the relative positions of the layers constituting the material to be dried, in proportion as its progress through the fluid stream proceeds, or, on the other hand, to modify the normal direction of flow of the fluid, by conducting toward the lower portion of the chamber its hottest strata that convection movements had carried toward the summit of the tunnel. With this object in view it has been suggested to arrange at intervals in the chamber of the drying apparatus, inclined deflectors or baffles opposing the normal flow and conducting downward the gases that tend naturally to rise. These arrangements present certain defects, however, and *inter alia* they present great resistance to the flow of the fluid which experiences numerous losses of charge. As a result, partial stagnations are produced which give rise to excessive heating of certain portions of the drying apparatus and more particularly the excessive heating of the deflectors which thus constitute radiant walls tending to raise the temperature of the portion of the chamber that they delimit.

The present invention has for its object to avoid the inconveniences indicated above, in eliminating the detrimental space between the conveyer and the envelop and in rendering the temperatures uniform in the various sections of the drying tunnel. For this purpose, the tunnel is constituted by the juxtaposition of a series of chambers in which are arranged the materials to be dried. These chambers constitute the conveyer and also the envelop and their assemblage constitutes the tunnel in which the flow of the gaseous current producing the drying is brought about by any suitable means. These chambers are so arranged as to move in the opposite direction to the flow of the gaseous current. With this object in view the chambers are periodically separated from the tunnel as a whole at the extremity which corresponds with the introduction of the heating fluid, and when the materials have reached the desired degree of siccity, while other chambers, containing materials that are to be subjected to treatment, are added in order to complete the tunnel, at the extremity opposite to that at which the calorific agent is discharged. In order to render the temperature uniform, each of the chambers comprises superposed supports, inclined from front to rear rela-

tively to the direction in which the calorific agent flows. These supports are such that as the materials to be treated are charged at their extremities, they leave centrally a space which remains free. Under these conditions, the calorific fluid which passes along and beneath the materials placed upon the inclined supports, is directed toward the bottom of the tunnel until the moment at which it reaches the free central portion. It then rises in such a manner that, owing to the draft which exists in the drying apparatus and the consequent tendency to displacement, it penetrates beneath the material that covers the rear extremity of the upper supports, in such a manner that the materials arranged upon the latter, owing to their inclination reconduct the streams of fluid to discharge levels approximately corresponding to those at which they entered each chamber. Under these conditions and if the temperatures at the inlet and at the outlet of each chamber be compared, it will be found that the distribution are identical in such a manner that if the temperatures are uniform at the inlet to the first chamber, they will still be uniform at the outlet from the tunnel. Without any obstacle to oppose the flow of the calorific agent therefore, the result is obtained that a progressive and uniform heating of the materials to be dried, is effected. It should also be noted that, in the case of textile materials, they are heated most at the lower part which is of course the moistest portion, than at the upper part. This obviously follows from the tendency of the hot gases to rise between the layers of textile materials along which they pass. This heating of the lower portion of the layers also produces the physical effect of swelling, in such a manner that the feet of the rods separate and facilitate the penetration of the agent between them.

The present invention is illustrated, by way of example, in the accompanying drawings, in which:

Figure 1 shows diagrammatically a partial view of a drying apparatus embodying the invention. Fig. 2 is a corresponding plan view. Figs. 3 and 4 are detail views in elevation and in plan respectively. Fig. 5 is a cross section of a chamber forming part of the tunnel. Fig. 6 shows in plan the arrangement of the lateral obturating shutters. Fig. 7 shows diagrammatically in plan a modification introduced into the apparatus as a whole for facilitating the charging and discharging of the chambers constituting the tunnel. Fig. 8 is a view showing the control means for the traverse tables employed in the modified form of apparatus illustrated in Fig. 7. Fig. 9 is a view corresponding to Fig. 7, the traverse table having been displaced for maneuvering the chambers. Fig. 10 shows in front elevation the lifting platform for charging and discharging the chambers. Fig. 11 is an end elevation corresponding to Fig. 10.

In carrying out the present invention, the efficiency of the drying process is increased by completely utilizing the calorific agent, owing to the constitution of the conveyer device by the chambers forming the tunnel themselves and of obtaining uniformity of temperatures in any given section of the tunnel, without modifying the position of the materials upon the supports on which they are extended, and by dispensing with all partitions or deflectors in the path of the fluid stream for reconducting the hot gases into their rectilinear path. With this object in view, by appropriately arranging the materials and the supports on which they are extended, a sinuous path is obtained (see Fig. 1) for each of the fluid streams that they conduct, in such a manner that, in addition to obtaining an improved calorific exchange, it follows that when the gases leave a chamber, they are constantly returned to the level that they occupied when they entered it. With this object in view, the materials or the supports 1 are inclined from front to rear in each section or chamber 2 of the tunnel, vacant spaces being left at their central portion which permit the fluid that is conducted downward, to ascend toward the upper part of the chamber, in order to penetrate beneath a higher layer of material or a support. The fluid is thus again directed downward and is again brought to a level corresponding with that at which it entered the chamber or any section thereof. The tunnel is thus constituted by the juxtaposition of a series of chambers 2, mounted upon wheels 4 in the manner of trucks; these chambers 2 are interposed between the drum 5 for the introduction of the calorific fluid and the discharge chimney 6. In each of the chambers 2, which are of course open at their ends, lateral and median supports are arranged (see Figs. 3 and 5); these supports are inclined and receive the supporting bars 8, in cases in which textile materials are being dried, or plates or other surfaces, according to the nature of the materials to be treated. These supports are arranged in such a manner that when the materials are charged onto them their central portion 3 is left free, for the purpose specified above. In the case of textile materials, the arrangement should be such that the feet are located at the extremities of the supports for extending the materials; the heads are therefore arranged opposite each other and on either side of the vacant space 3 that is left between them.

For charging the apparatus, each chamber 2 is provided with a roof constituted by two panels 9 hinged on either side of a central cross piece 10; these panels 9 can be

raised in any convenient manner to permit of the charging (see Fig. 1) and turned down during the operation of the drying apparatus.

In order to obtain a good joint between the chambers 2 arranged end to end, one of the panels is provided upon its edge opposite to its hinge connection with the median cross piece 10, with a hinged shutter 11 provided with a heat retaining covering, such as felt for example. Similarly, the corresponding vertical edges carry similarly covered hinged shutters 13; each of these shutters 13 fits against the corresponding face of the adjacent chamber 2, in such a manner that any loss of the heating fluid is prevented. The shutter 11 belonging to the upper charging panel 10 is applied under the influence of its own weight, while, on the contrary, the vertical shutters 13 are held in place by a rod 14 which rigidly connects them. This rod 14 passes transversely through the chamber 2, rests upon one of the shutters 13 and passes through the other; a resilient key or feather 15 insuring the rigid connection of the whole and the snug fitting of the joint-forming surfaces upon the walls of the adjacent chamber. The rod 14 also passes through openings formed in the edges of the walls of the said chamber. At the lower part, the running frame or truck carries a transverse member 16 which is applied to an identical cross piece forming part of the frame of the adjacent chamber.

In order to effect the various maneuvers which permit of separating from the tunnel the head chamber in which the drying is finished and of arranging at the rear a fresh chamber charged with materials to be subjected to the treatment, an operating track 17 (see Fig. 2) is provided to permit of the displacement of the trucks carrying the chambers 2. This track is arranged in such a manner as to unite the drum 5 distributing the calorific fluid, and the discharge chimney 6. A charging track 18 is arranged parallel with the operating track 17 and connection can be established between them by means of two traverse tables 19. These tables 19 are respectively constituted by a framework upon which rails 20 are fixed and upon the transverse displacement of the frame or chassis, these rails can be brought in line with one or other of the parallel tracks 17, 18. With this object in view, the chassis are respectively formed with channel irons serving as rails for the casters 21 mounted on spindles in the trenches extending across the two parallel tracks 17, 18. These casters 21 render it possible to move the table 19 from one track to the other to permit of passing the chambers 2 either from the track 17 of the drying apparatus onto the charging and discharging track 18 or inversely from the latter track onto the maneuvering track. Under these conditions, it will be apparent that, in normal operation, the chambers 2 are arranged one after the other and bear one against the other, the obturating shutters 11, 13 being turned down and applied to the joints. In order to permit of moving the front chamber by means of the table 19 onto the discharging track 18 when the drying operation has been completed in this chamber, it is first of all necessary to move slightly rearward, the train constituted by the assemblage of chambers that rest against the chamber that it is desired to separate from the tunnel. With this object in view, there is arranged at the rear of the tunnel and in a lateral trench 23 (see Fig. 3) a chain transmission 24, adapted to be driven by any suitable means. This chain 24 is arranged parallel with the track 17 and comprises a bar 25 which extends rearward; the object of this bar is hereinafter described. This bar 25 is guided by an outer roller 26 and in front it carries two rollers 27 which are guided between the rails 28 arranged parallel one to the other on either side of the chain 24. The front end of the bar 25 carries a projection 29, which, when the chain 24 recedes, engages a second projection 30 carried by another bar 31 pivoted to a block 32 sliding in a suitable slideway. A spring 33 tends to draw back the rod 31 and its sliding block 32 to the end of its travel toward the front of the tunnel. At its front extremity and plumb with the running frame of the first chamber that is to be separated from the tunnel, the bar 31 carries a projection 34 which can be brought out of, or placed in the path of, the cross piece 16 forming part of the said frame. With this object in view a crank 35 can be displaced angularly in such a manner as to raise or lower the front portion of the pivoted bar 31. Under these conditions, after the shutters 13 belonging to the chamber that is to be separated from the tunnel and to the chamber that follows it have been released from their locking member, the transverse bar 14, it is possible to turn down the said shutters 13 onto the walls of the latter. By operating the crank 35, the projection 34 on the bar 31 rises in such a manner that, by actuating the chain 24, it is caused to bear against the rear cross member 16 of the running frame of the first chamber, it then carries along the latter which is then disconnected in pressing back the tunnel as a whole. By means of the front traverse table 19, the chamber thus released can be caused to pass from the operating track 17 onto the discharging track 18.

Upon the bar 25 which extends toward the rear and which belongs to the traction chain 24, there is also arranged a pivoted tappet 36 adapted to be moved aside and

which a spring 37 tends to raise. By acting upon the chain 24 in the opposite direction to that of the first operation which produces the release of the front chamber, the tappet 36 on the rear bar 25 is caused to engage the lateral stops 38 provided on each of the running frames or chassis. In this manner the entire train or assemblage is displaced, its first chamber fitting against the drum 5 which distributes the calorific agent. This maneuver also renders it possible, by means of the traverse table 19, to effect the moving from the discharging and charging track 18 of a fresh chamber 2 which has previously been charged with the materials intended to be subjected to the treatment and which are to travel in succession toward the front portion of the tunnel in proportion as the chambers in which the drying is finished are separated from the tunnel.

When, by their arrangement, the chambers have reconstituted the tunnel, it is only necessary to turn down the lateral shutters 11, 13 then to lock them in place by means of the rods 14 and the resilient keys 15. The tunnel can then again be placed in service and the gaseous current effecting the driving can be passed through it.

It will be noted that during the displacement of the chain 24 that serves to advance the chambers 2, the front bar 31 which is no longer displaced by the projection 29 carried by the rear bar 25, is drawn back together with its stop block 32 by the counter spring 33. It is thereby returned to its normal position for a subsequent operation.

With the object of accelerating and facilitating the charging and discharging of the chambers 2, and to reduce the manual labor required, the installation described above may be completed and modified in accordance with the arrangements illustrated in Figs. 7, 8, 9, 10 and 11. The arrangement consists broadly in the addition of a trench which terminates the track along which the materials to be dried are conducted and in which a hoisting platform is capable of vertical displacement, this platform receiving in turn the chambers 2 to be charged and the chambers to be discharged which may also be lowered to a suitable height for facilitating access to the frames on which the materials are extended. The utilization of such a device, with the installation already described with reference to Fig. 2, for the charging and discharging, renders it necessary, in order to permit of communication between the trench and the track 18, to fill up the break that exists in the latter during the drying operation, in such a manner that the chambers 2 can be brought from the trench onto the track 18 or vice versa as desired. One method, but an imperfect one, which would permit of effecting this maneuver would consist in adding a second traverse table at the front of the transverse track 21; this arrangement however, presents the defect that this track would have to be lengthened to a corresponding extent, as it would be necessary to provide a supplementary length of rails for the purpose of rendering inoperative the second traverse table corresponding to the track 18, when the traverse table 19 replaced it for the purpose of conducting to the trench the chamber that is to be discharged after complete drying. In the arrangement illustrated in Figs. 7, 8 and 9, this result is attained while retaining the front traverse table shown in Fig. 2, and the casters 21 have been replaced by rails upon which the second traverse table can be displaced, the two parallel tracks of this traverse table can be arranged the proper distance apart for prolonging the track 18 or brought sufficiently close together when rendered inoperative, in which case the second traverse table 19 in its turn corresponds with the rails 18. As a result the trench 40 terminates the track 41 for supplying the materials to be treated. A platform 42 carrying a length of track prolonging the track 18, is rigid with a girder 43 forming a cage with lateral inlets and provided with a yoke or handle 44 supported and actuated by any suitable form of lifting device. One of the chambers 2 that is conducted there can therefore be lowered into the trench to a suitable height for manipulation. The panels 9 provided with rings can then be opened and fixed to the handle or yoke 44 (see Fig. 10).

The modified front traversing apparatus (see Figs. 7, 8 and 9) renders it possible to displace two traverse tables upon a track 45 arranged in a trench or cutting transversely of the tracks 16 and 17; one of these traverse tables the table 19, is of the construction already described and is adapted to connect the track 18 with the trench 40 (see Figs. 7 and 9) or, during the drying operation, prolong the track 17 as far as the heating drum 5 (see Fig. 8), while the other serves to reëstablish the continuity of the track 18 during the drying operation. This traverse table, which is automatically actuated by the displacement of the traverse table 19, is constituted as follows: The two lengths of track 46 and 46′ mounted upon rollers 47 in the manner of the traverse table 19, are capable of displacement parallel one to the other upon the track 45. In the case illustrated in Fig. 8, that is to say during the drying operation, the intervals separating the lengths of track 46 and 46′ is equal to that of the traverse table 19 of the track 18; it is defined by stops 48 and 49 integral with an endless driving chain 50 connected with the traverse table 19; this chain is driven by pulleys 51 over which it passes.

If it be displaced in the direction indicated by the arrow (see Fig. 9), the traverse table 19 is displaced in such a manner as to form an extension of the track 18 (see Figs. 7 and 9). This displacement simultaneously causes a thrust to be exerted upon the length 46 and the displacement of the length 46′ by the stop 48.

As the whole of this device can be housed in trenches, it will be seen that the space occupied by the apparatus is reduced as compared with having recourse to a platform arrangement for supporting the two lengths of connecting track.

In order to return the traverse tables into the normal drying position (see Fig. 8) the chain 50 is displaced in the direction indicated by the arrow (see Fig. 8), the four lengths of traverse rails of decreasing length are displaced and stopped in position by projecting fish plates 52 fixed to the extremities of the rails 18 and 17 and by stops 53 on the opposite side.

What I claim and desire to secure by Letters Patent of the United States is:—

1. In an installation for the drying of textile materials such as flax, hemp and so forth, a drum for the introduction of hot gases, a series of chambers arranged in juxtaposition for the reception of the textile materials and in which the hot gases circulate, inclined frames in each of these chambers upon which the textile materials are extended in such a manner as to constitute oblique parallel passages throughout the chambers as a whole with a break in the frames or supports at the middle of each chamber, in such a manner as to cause the hot gases to mingle and to render uniform the drying, and means for bringing the said chambers into position and for displacing them.

2. In an installation for the drying of textile material such as flax, hemp and so forth, a drum for the introduction of hot gases, a series of chambers arranged in juxtaposition for the reception of the textile material and permitting of the circulation of the hot gases, inclined frames or supports in each chamber, a break in the supports at the central portion of each chamber, two shutters hinged upon a central cross member to form the roof of each chamber, hinged shutters lined with felt or other insulating material at one of the extremities of each chamber, a rod passing through the lateral shutters in such a manner as to apply them hermetically to the panels of the adjacent chamber, means for fixing the rod in position, and means for bringing the said chambers into position and for displacing them.

3. In an installation for the drying of the textile materials such as flax, hemp and so forth, a drum for the introduction of hot gases, a series of chambers arranged in juxtaposition for the reception of the textile materials and permitting of the circulation of the hot gases, inclined frames or supports in each chamber, a break in the supports at the central portion of each chamber, two shutters hinged to a central cross member for forming the roof of each chamber, hinged shutters covered with felt or other insulating material at one of the extremities of each chamber, a rod passing through the lateral shutters in such a manner as to apply them hermetically to the panels of the adjacent chamber, dogs or drivers, and a running chassis or truck for each chamber, rails forming a track for the chambers as a whole and means for bringing the chambers into position and for displacing them.

4. In an installation for the drying of textile materials such as flax, hemp and so forth, a drum for the introduction of hot gases, a series of chambers arranged in juxtaposition for the reception of the textile materials, and permitting of the circulation of the hot gases, inclined frames or supports in the said chambers, means for forming a good joint between the said chambers, drivers or dogs and a running chassis or truck for each chamber, rails forming a track for the chambers as a whole, traverse tables arranged transversely at the extremities of this track in such a manner as to connect it with a parallel track for charging and discharging the chambers, and means for displacing the said chambers as a whole when the chamber in which the drying is finished has been conducted onto the discharging track.

5. In an installation for the drying of textile materials, such as flax, hemp and so forth, a drum for the introduction of hot gases, a series of chambers arranged in juxtaposition for the reception of the textile materials and permitting of the circulation of the hot gases, means for insuring a good joint between the said chambers, a running chassis or truck for each chamber and drivers or dogs, rails forming a track for the chambers as a whole, a charging and discharging track arranged parallel with the first, a traverse table connecting one of the extremities of the said tracks, another traverse table connecting the other extremity and displaceable upon rails, independent trucks carrying two lengths of rails, a chain for actuating the said trucks, means permitting the lengths of rails to form extensions of the charging or discharging track, or on the other hand permitting of bringing them together, and means for bringing the drying chambers into position and for displacing them.

6. In an installation for drying textile materials such as flax, hemp and so forth, a drum for the introduction of hot gases, a series of chambers arranged in juxtaposition

for the reception of the textile materials and permitting of the circulation of the hot gases, means for insuring a good joint between the said chambers, a running chassis or truck for each chamber and drivers or dogs, rails forming a track for the chambers as a whole, a charging and discharging track arranged parallel with the first, a traverse table connecting one of the extremities of the said tracks another traverse table connecting the other extremity and movable upon rails, independent trucks carrying two lengths of rails, a chain for operating the said trucks, stops or tappets upon the chain for displacing the traverse table and the trucks with the object of prolonging the charging and discharging track, a charging and discharging trench between the traverse table and the track for supplying the materials to be treated, a cage displaceable vertically in the said trench for the reception of the chambers and means for bringing the said drying chambers into position and for displacing them.

7. In an installation for the drying of textile materials such as flax, hemp and so forth, a drum for the introduction of hot gases, a series of chambers arranged in juxtaposition for receiving the textile materials and permitting of the circulation of the hot gases, means for insuring a good joint between the said chambers, a running chassis or truck for each chamber and drivers or dogs, rails forming a track for the chambers as a whole, a charging and discharging track arranged parallel with the first track, a track traverse table connecting one of the extremities of the said tracks, another traverse table connecting the other extremity and displaceable upon rails, means for bringing the traverse table or the trucks into line with the charging and discharging track, a charging and discharging trench, a cage displaceable vertically in the said trench for receiving the chambers in succession, an endless chain arranged parallel with the track upon which the said chambers are displaced, a truck suspended from the said chain, guides for the said truck, a pivoted bar upon the said truck for displacing the chambers, a projection from the said bar acting during the inverse displacement of the chain upon another bar, a counter spring for the said bar, a lever for lifting the said bar and permitting of the displacement of the chambers in the opposite direction, with the object of causing one of the said chambers to pass onto the charging and discharging track.

In testimony whereof I affix my signature in presence of two witnesses.

EMILE FEUILLETTE.

Witnesses:
HANSON C. COXE,
GEORGES BOUNEUIL.