July 8, 1969 H. S. CHAMBERLIN, JR., ET AL 3,454,942

PERFORMANCE DISPLAY APPARATUS

Filed Sept. 22, 1966

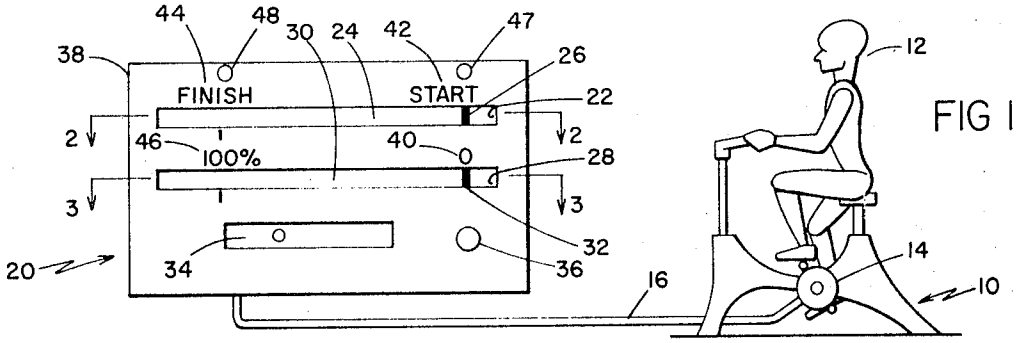

FIG 1

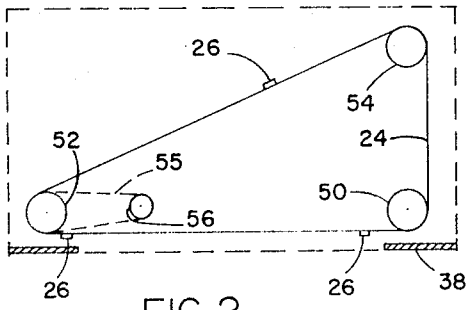

FIG 2

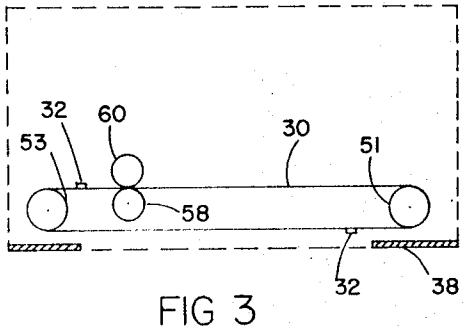

FIG 3

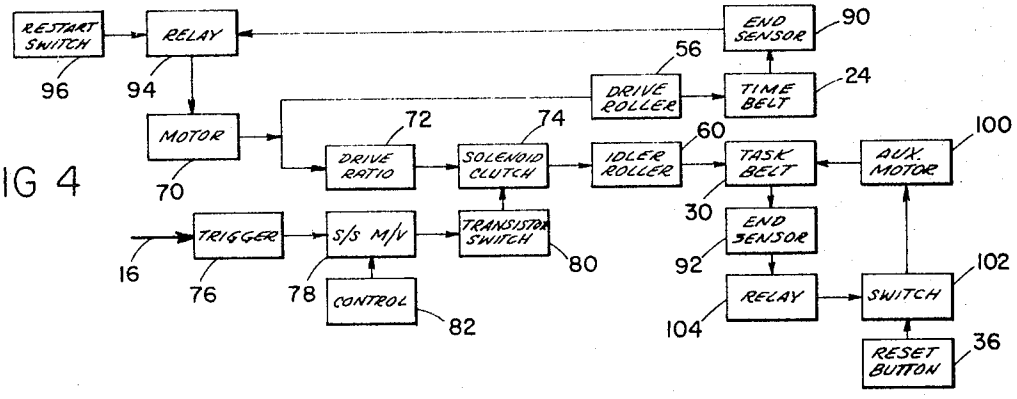

FIG 4

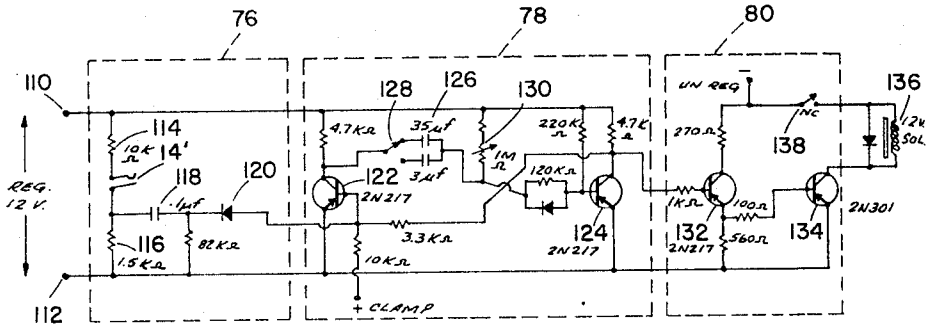

FIG 5

United States Patent Office

3,454,942
Patented July 8, 1969

3,454,942

PERFORMANCE DISPLAY APPARATUS

Henry S. Chamberlin, Jr., Andover, Roger E. Graves, Jr., Amesbury, and Joseph P. Kelley, Belmont, Mass., assignors to Bio-Dynamics, Incorporated, Cambridge, Mass., a corporation of Massachusetts

Filed Sept. 22, 1966, Ser. No. 581,388
Int. Cl. G08b *23/00, 5/22;* A63b *21/00*
U.S. Cl. 340—323 11 Claims

ABSTRACT OF THE DISCLOSURE

An exercise machine performance evaluation device in which a single motor continuously drives a first belt having a moving indicator which represents a desired rate of performance and periodically drives a second indicator belt which represents the actual rate of performance. The two belts travel at a different rate of speed such that the intermittent motion of the second belt by the motor in response to periodic inputs from the exercise device can equal the constant rate of travel of the first belt. The duration of intermittent engagement of the second belt is selectively variable and therefore provides performance evaluation over a range of rates.

This invention relates to performance evaluation apparatus and more particularly to apparatus for providing a display of performance whereby the performance may be easily correlated with an established standard.

In the performance of exercise or other activity by humans, it is frequently desired to evaluate the activity. A particularly useful device would enable the person performing the activity to evaluate his own performance on a continuing basis and it is an object of this invention to provide a simple apparatus which enables such evaluation.

Another object of the invention is to provide a display device which may be easily coupled to an exercise machine or similar activity mechanism and which provides a direct indication of the quality of the performance of the operator of the exercise machine against a predetermined criterion.

In accordance with the invention there is provided a display having two channels which are coordinated in space. Each display channel includes an indicator which is movable along a track, one indicator being a reference driven, for example, at a fixed rate as a function of time and the second indicator being a function of performance and driven in response to operation of the supervised mechanism. In a particular embodiment, a common drive element is employed for both indicators each of which is mounted an an independent endless belt. The common drive element is rotated continuously at a fixed rate for a predetermined period to drive the first or standard belt. A second belt drive is responsive to a performance input from the associated exercise machine and that input causes the second belt to engage the common drive element and be driven thereby for a predetermined relatively short interval. The rate of application of performance inputs from the exercise machine to the display apparatus controls the movement of the performance (task) indicator along the performance track and that movement is correlated with the continually moving reference (time) indicator so that the operator of the exercise machine may evaluate his performance against the pre-established standard. The apparatus includes an arrangement for adjusting the amount of advance of the performance indicator in response to each performance input signal. The apparatus is a reliable, inexpensive and versatile device which enables the operator of an exercise machine to evaluate his performance on a continuing basis.

Other objects, features and advantages of the invention will be seen as the following description of a particular embodiment thereof progresses, in conjunction with the drawings, in which:

FIG. 1 is a diagrammatic view of an exercise machine and performance evaluation display associated therewith;

FIG. 2 is a sectional view in diagrammatic form of the reference (time) belt of the performance evaluation display apparatus taken along the line 2—2 of FIG. 1;

FIG. 3 is a sectional view in diagrammatic form of the performance (task) belt of the display apparatus taken along the line 3—3 of FIG. 1;

FIG. 4 is a block diagram view of the performance and reference indicator drive arrangement employed in the apparatus shown in FIGS. 1–3; and

FIG. 5 is a schematic diagram of circuitry responsive to inputs from the exercise machine for advancing the performance indicator.

With reference to FIG. 1 there is shown an exercise machine **10** being operated by a person **12**. Other activity mechanisms such as rowing machines or treadmills also may be employed. In this arrangement, the exercise bicycle has a sprocket **14** which is driven in rotation by pedaling. Output line **16** is connected to the bicycle and for each complete revolution of the sprocket a switch closes and applies a signal over line **16** to performance evaluation equipment generally indicated at block **20**.

That equipment includes a display which includes an upper channel (window) **22** behind which a belt **24** of Mylar or other suitable material is positioned having an indicator **26** thereon in the form of a high contrast line which may be painted or otherwise deposited or firmly affixed to the belt and a lower channel (window) **28** behind which a second similar belt **30** is positioned having a similar type of indicator **32** thereon. Also on the face of the equipment is control **34** (rheostat) which may be used to select or adjust the effective magnitude of input signal applied by mechanism **10** to drive the performance indicator belt **30**. The display panel **38** further includes a reset button **36**.

Each window of the display is approximately 14 inches long in a horizontal plane, 1 inch wide and the windows are spaced ½ inch apart. On the panel **38** at the right end of each window a starting point is designated at which the indicators **26** and **32** are initially aligned. The performance display window has a "zero" **40** positioned in alignment with the "start" indication **42** on the standard display window. Near the left end of the standard display window a "finish" mark **44** is provided and correspondingly located relative to the performance window is a second designation **46**—"100%." Two pilot lights **47, 48** are also mounted on panel **38**.

The time belt **24** is mounted on three pulleys **50, 52** and **54** as shown in FIG. 2 for traverse around a triangular path. The performance belt **30** is mounted on two pulleys **51** and **53**. Pulleys **50** and **51** are mounted on a common shaft, but are free to rotate independently; the same is true of pulleys **52** and **53**. Roller **54** is mounted on a spring loaded arm and applies tension to the time belt **24**. The time belt **24** is driven by pulley **52**, and pulley **52** is in turn driven by a rubber belt **55** by pulley **56**.

Belt 30 is periodically caused to engage roller 58 by means of idler roller 60 which forces the belt against the drive roller to advance that belt a predetermined distance.

A block diagram of the drive system is shown in FIG. 4. That system includes a synchronous timing motor 70 which directly drives roller 56 and through a linkage diagrammatically indicated as a step-up gear ratio device 72 and a clutch 74 causes task belt 30 to engage drive roller 58. The clutch 74 moves idler roller 60 and is actuated by trigger circuit 76 which responds to an input from exercise machine 10 to trigger a single shot multivibrator 78 which controls transistor switch circuit 80 to energize solenoid clutch 74 which pulls the idler roller 60 towards the drive roller 58 and advances task belt 30 a predetermined distance. The circuit also includes a pulse length control adjustment 82 which responds to element 34 on the display panel face 38 and thus controls the duration of engagement of the task belt 30 with the drive roller 58.

Belt 24 has three apertures (not shown) in it and belt 30 has two apertures in it. When an aperture reaches a predetermined position an end sensor 90, 92 respectively is triggered. In the case of time belt 24, the actuation of end sensor 90 operates a relay 94 which de-energizes the motor 70. A restart circuit switch 96 located remotely at the exercise machine 10 overrides relay 94 and restarts drive motor 70.

End sensor 92 is used for repositioning task belt 30 prior to initiation of the next performance evaluation. That circuitry includes a rewind motor 100 which responds to switch 102 which is actuated by reset pushbutton 36 and is turned off by relay 104 which is controlled by end sensor 92. The performance belt rewind motor 100 is mounted on a pivot; when the reset button is pushed, it physically forces the motor against pulley 53 and at the same time trips a microswitch 102 which turns the motor on. The reset button must be held in until the mark 32 on the belt comes around to the start position (on the order of one second). The mark is stopped automatically at the start position by a spring falling through an aperture in the belt, which trips relay 104 and prevents any further motion of the belt by the reset motor.

A schematic diagram of the performance input circuitry is shown in FIG. 5. That circuitry includes terminals 110, 112 which are connected to a regulated twelve volt source. Connected across these terminals is a voltage divider network of resistors 114, 116 and a task performance switch 14' which is actuated periodically by the machine 10 on which this switch is located. When switch 14' is closed, a signal is coupled by capacitor 118 through diode 120 to the input of multivibrator circuit 78. That multivibrator includes two transistors 122, 124 and a cross-coupling network which includes a set of capacitors 126 (only two being shown) which are selectively connected in the circuit by switch 128 located at the rear of the display package and a variable resistance 130 which is controlled by control 34 on the face of display panel 38. The multivibrator circuit 78, when triggered, produces an output pulse of duration determined by the selected values of the variable resistance 130 and the capacitor 126 in the cross-coupling network and causes transistors 132 and 134 in switch circuit 80 to conduct and energize the solenoid coil 136 in the solenoid clutch circuit 74 to move idler roll 60 towards drive roller 58 and carry task belt 30 into engagement with drive roll 58 for the period of time determined by the duration of the output pulse of multivibrator 78. (Switch 138 in circuit 80 is normally closed).

In operation, the operator 12 prior to operating the exercising machine sets control 34 to a rate he believes appropriate. Reset button 36 is then depressed and held until the marker 32 stops in alignment with marker 26 at the starting position of the two display channels. The operator 12 then prepares to begin exercising (e.g., gets on the bicycle) and depresses the restart button, energizing drive motor 70, at which time he begins exercising at a rate suitable to keep marks 26 and 32 aligned, mark 26 being driven continuously by the synchronous motor while mark 32 is driven periodically in response to operation of the exercise machine. The pilot light 48 remains on until the effort belt 30 has been reset and the restart button 96 has been depressed. The pilot light 47 then comes on and remains on until the time belt 24 has reached the stop position. Through selection of a desired drive ratio element 72, a suitable ratio being 1:2.6, and the time that the solenoid clutch 74 holds the idler roll 60 against the task belt, the motion of the task belt appears to be a substantially continuous advance and provides an accurate, immediate representation of the rate at which exercise is being performed.

When the time belt 24 reaches the finish, it is stopped by end sensor 90 which turns off motor 70 and at the same time the task belt drive is also stopped. Thus, after the predetermined interval, a typical interval being ninety seconds, both belts are disabled and the performance of the exercise over that interval may then be evaluated.

What is claimed is:

1. Performance evaluation display apparatus for use with an activity mechanism comprising two aligned display channels, first and second indicators disposed adjacent respective ones of said display channels, first apparatus for advancing said first indicator continuously at a fixed rate for a predetermined period of time, and second apparatus responsive to a series of performance inputs for advancing said second indicator periodically to provide an indication of performance as a function of time indicated by said first indicator.

2. The apparatus as claimed in claim 1 wherein each said indicator is mounted on an endless belt and further including a common drive element for said two belts.

3. The apparatus as claimed in claim 2 wherein said second apparatus includes a drive element which moves said second belt into engagement with said common drive element in response to each said performance input.

4. The apparatus as claimed in claim 1 and further including means for adjusting the amount of advance of said second indicator in response to a performance input.

5. The apparatus as claimed in claim 4 wherein said adjustment means includes a single shot multivibrator, a plurality of capacitors, a switch for selecting one of said capacitors for connection in the cross coupling network of said multivibrator, and a variable resistance in the cross coupling network of said multivibrator.

6. The apparatus as claimed in claim 5 and further including a switch which is momentarily actuated by the coupled activity mechanism for generating each said performance input and triggering said multivibrator.

7. The apparatus as claimed in claim 6 wherein each said indicator is mounted on an endless belt and a further including a common drive for said two belts.

8. The apparatus as claimed in claim 7 wherein said second apparatus includes an idler roller which moves said second belt into engagement with said common drive in response to each said performance input.

9. The apparatus as claimed in claim 8 and further including a control indication carried by each belt, the control indication carried by said first belt de-energizing said common drive and the control indication carried by said second belt enabling reset of said second belt to its starting position.

10. The apparatus as claimed in claim 9 and further including an auxiliary drive for resetting said second belt and a manually operated switch for initiating operation of said auxiliary drive, and wherein the control indication carried by said second belt terminates operation of said second drive.

11. The apparatus as claimed in claim 1 and further including an activity mechanism remotely located from said display apparatus, an activity switch on said activity mechanism which is periodically actuated during operation of said activity mechanism for producing said per-

formance inputs, a restart switch on said activity mechanism for controlling said first apparatus, and a transmission link connecting said activity and restart switches to said display apparatus.

References Cited

UNITED STATES PATENTS

1,315,098	9/1919	Doglione	272—73
2,504,007	4/1950	Declercq	272—73
2,784,591	3/1957	Shoor	272—73
3,375,717	4/1968	Impellizzeri et al.	73—379

JOHN W. CALDWELL, *Primary Examiner.*

A. KASPER, *Assistant Examiner.*

U.S. Cl. X.R.

35—29; 40—32; 73—379, 488; 272—73; 324—68