Oct. 6, 1964 H. L. CLARY ETAL 3,151,546

CALCULATING MACHINE

Original Filed Sept. 25, 1961 9 Sheets-Sheet 1

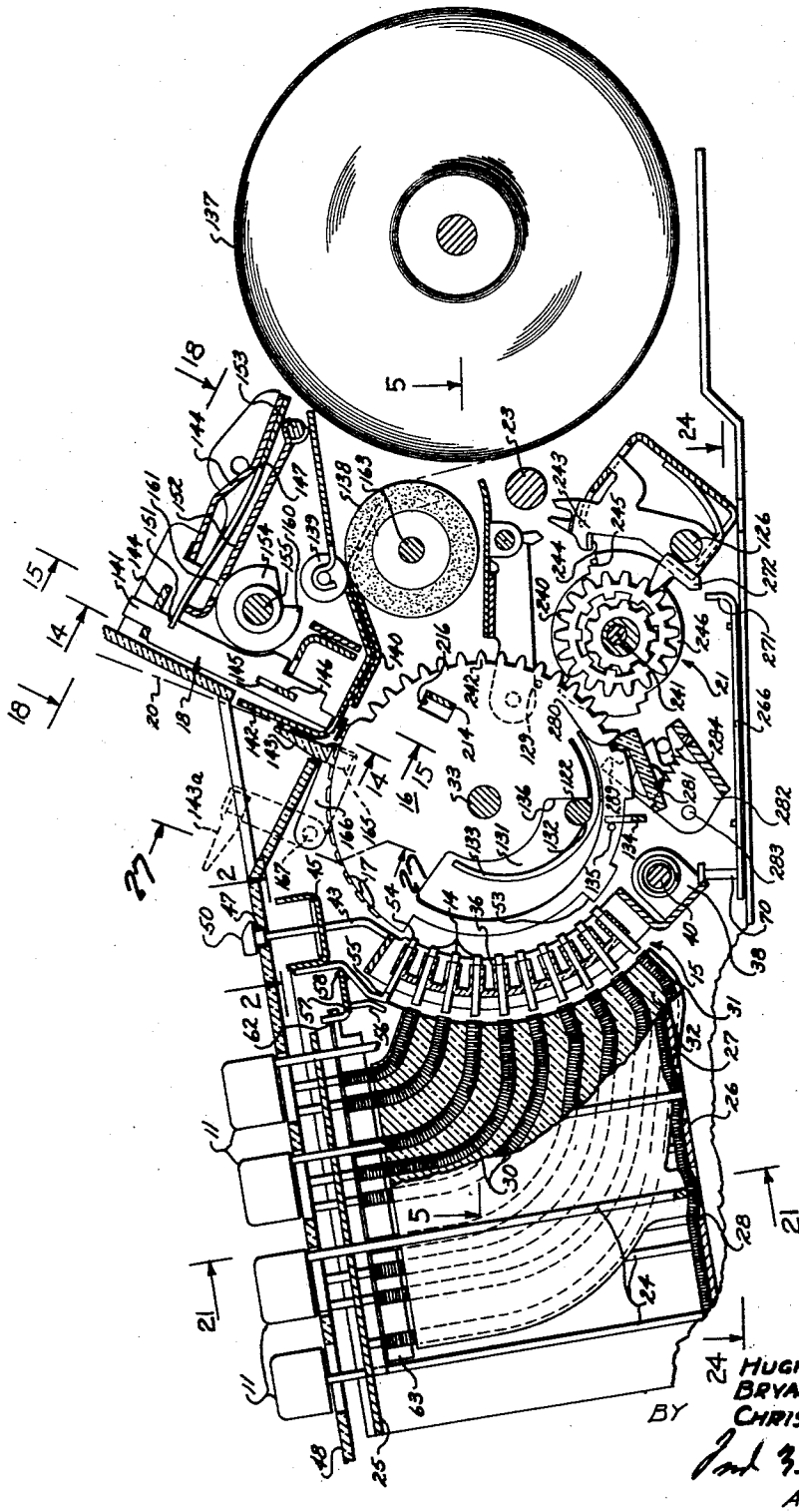

FIG. 1

INVENTORS
HUGH L. CLARY
BRYAN F. KUHNE
CHRIS A. CHRISTOFF
BY
Ind B. Schwend
ATTORNEY

CALCULATING MACHINE

Original Filed Sept. 25, 1961 9 Sheets-Sheet 2

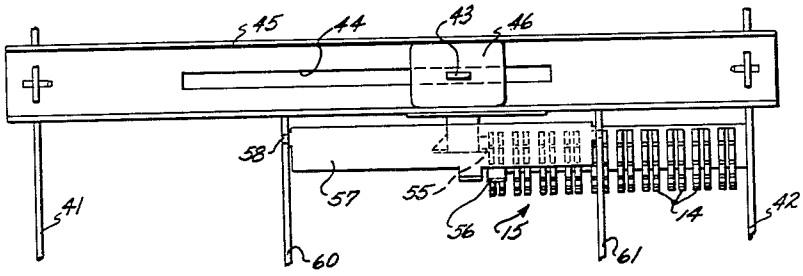

FIG. 2

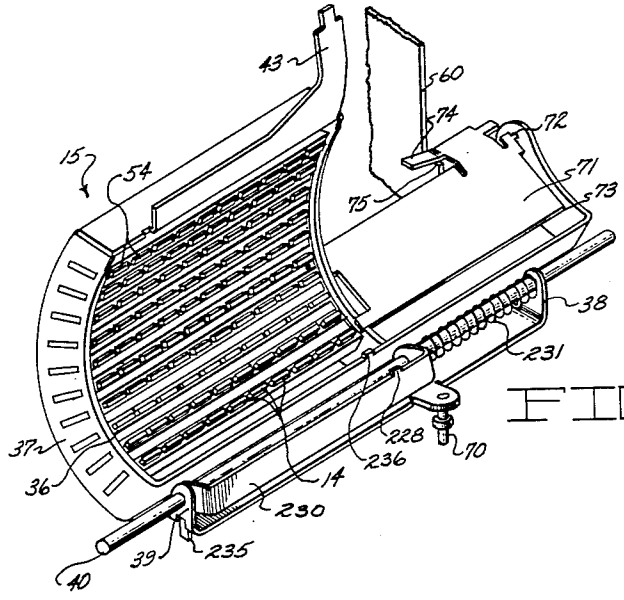

FIG. 3

FIG. 4

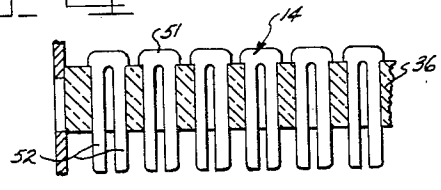

INVENTORS.
HUGH L. CLARY
BRYAN F. KUHNE
BY CHRIS A. CHRISTOFF
ATTORNEY

Oct. 6, 1964 H. L. CLARY ETAL 3,151,546

CALCULATING MACHINE

Original Filed Sept. 25, 1961 9 Sheets-Sheet 3

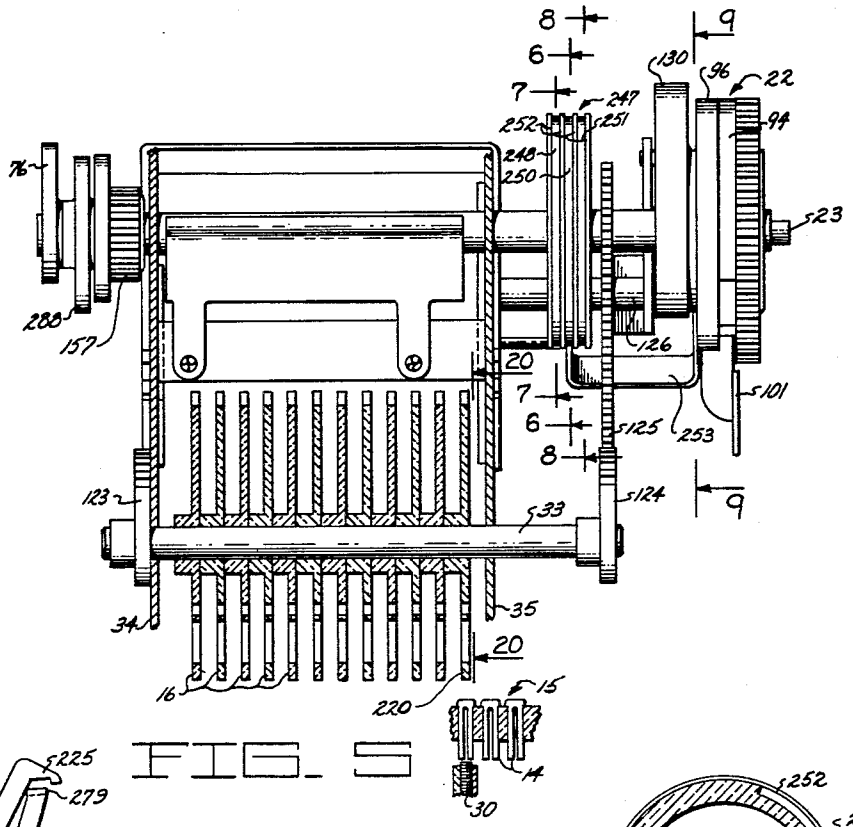

FIG. 5

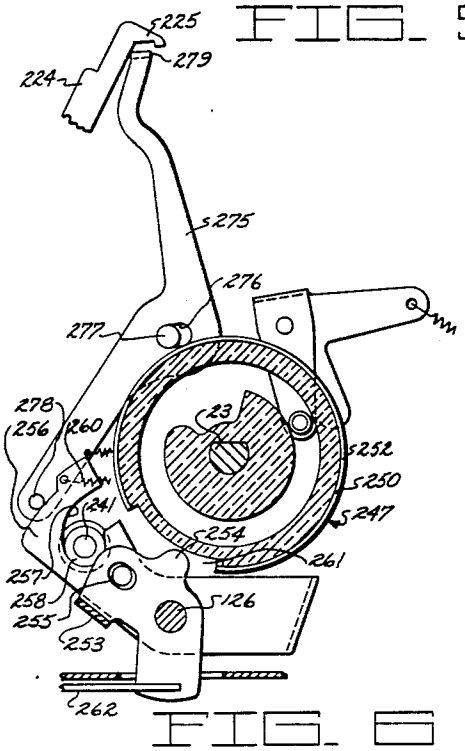

FIG. 6

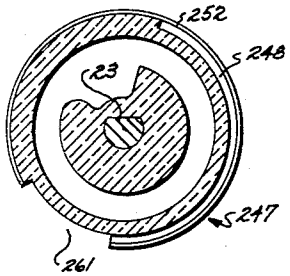

FIG. 7

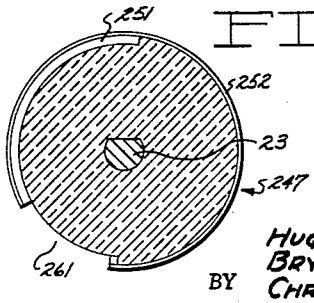

FIG. 8

INVENTORS
HUGH L. CLARY
BRYAN F. KUHNE
CHRIS A. CHRISTOFF

BY Fred H. Schmidt
ATTORNEY

Oct. 6, 1964 H. L. CLARY ETAL 3,151,546

CALCULATING MACHINE

Original Filed Sept. 25, 1961 9 Sheets-Sheet 4

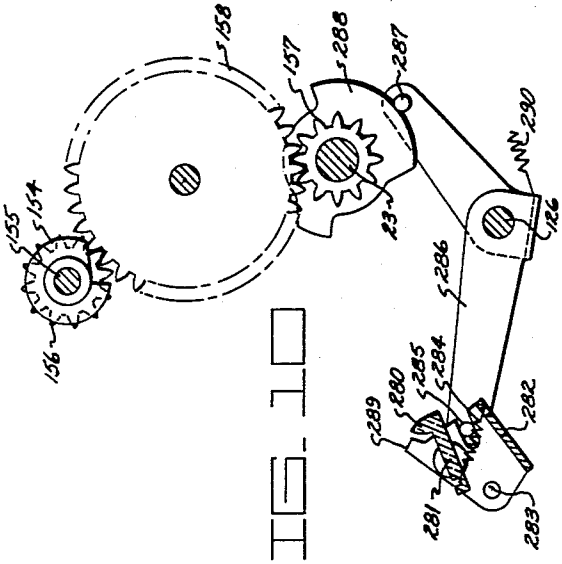

FIG. 10

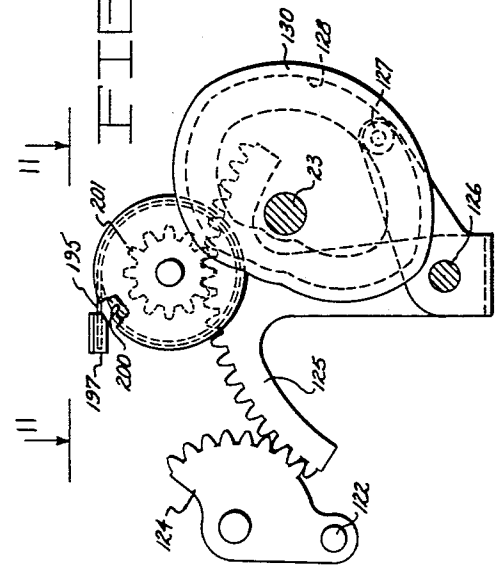

FIG. 5

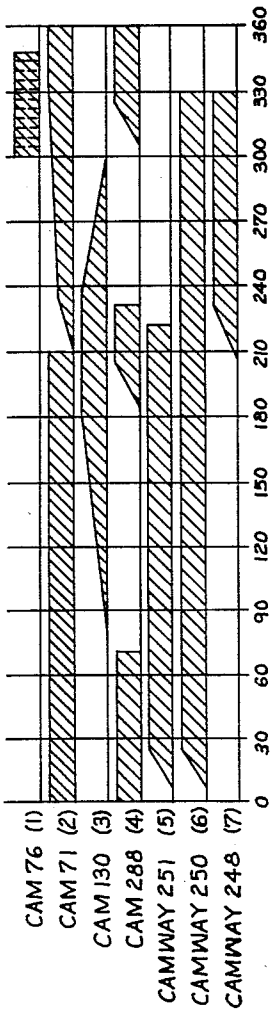

FIG. 12

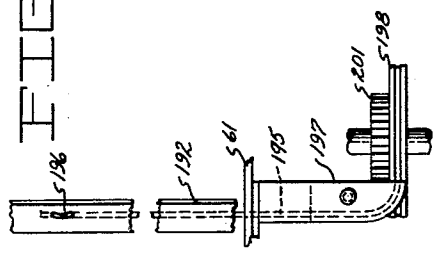

FIG. 11

INVENTORS
HUGH L. CLARY
BRYAN F. KUHNE
BY CHRIS A. CHRISTOFF
ATTORNEY

CALCULATING MACHINE

Original Filed Sept. 25, 1961 9 Sheets-Sheet 5

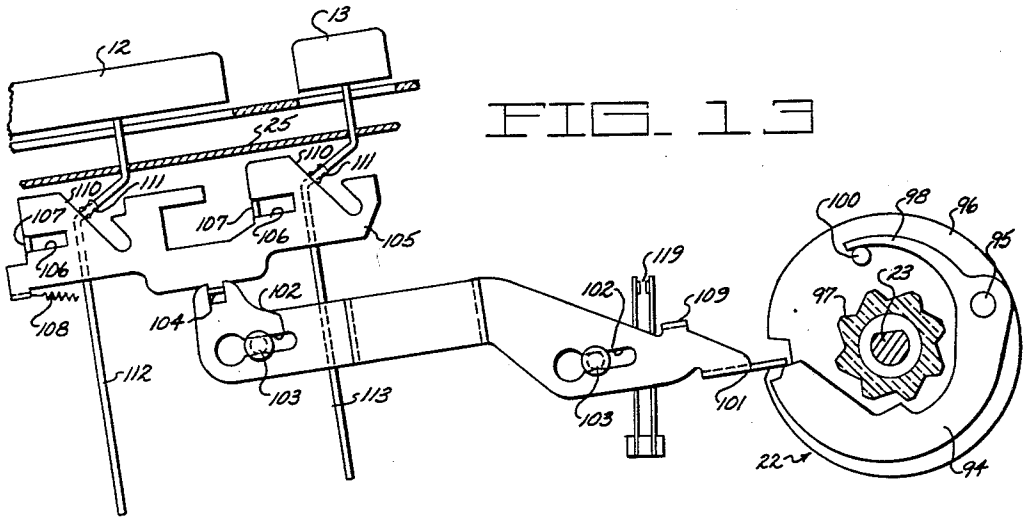

FIG. 13

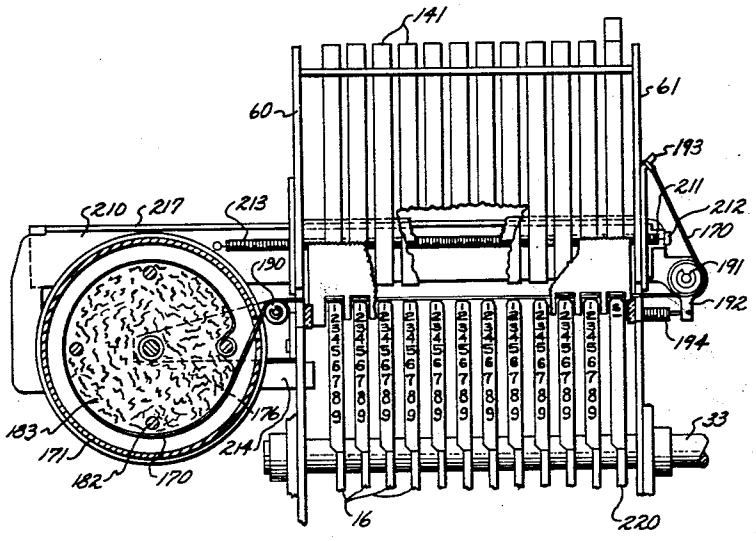

FIG. 14

INVENTORS
HUGH L. CLARY
BRYAN F. KUHNE
BY CHRIS A. CHRISTOFF
Fred J. Schmid
ATTORNEY

Oct. 6, 1964 H. L. CLARY ETAL 3,151,546

CALCULATING MACHINE

Original Filed Sept. 25, 1961 9 Sheets-Sheet 6

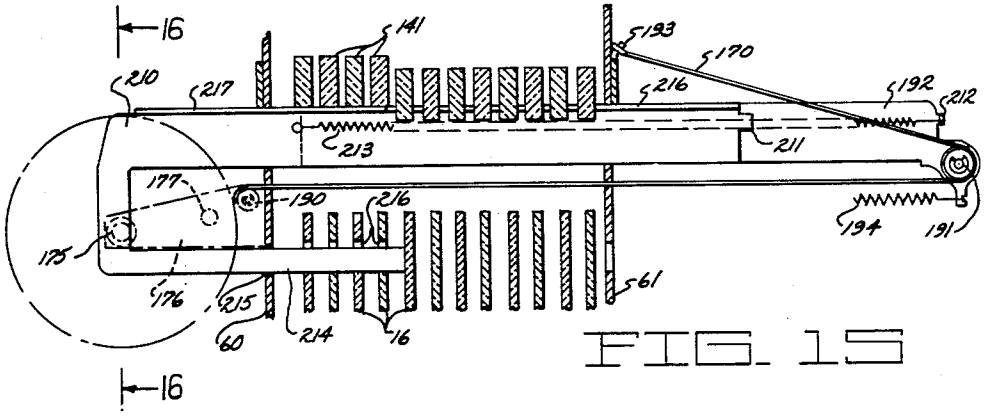

FIG. 15

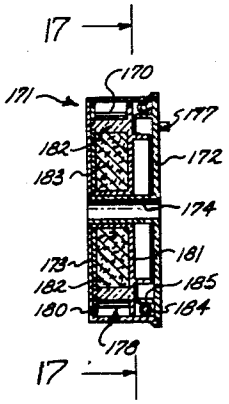

FIG. 16

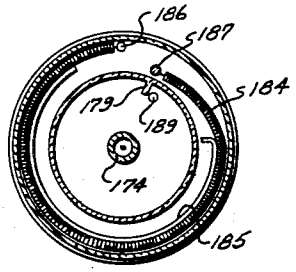

FIG. 17

FIG. 18

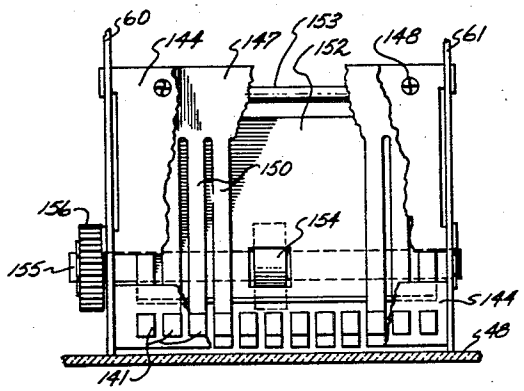

INVENTORS
HUGH L. CLARY
BRYAN F. KUHNE
BY CHRIS A. CHRISTOFF
ATTORNEY

Oct. 6, 1964 H. L. CLARY ETAL 3,151,546

CALCULATING MACHINE

Original Filed Sept. 25, 1961 9 Sheets-Sheet 7

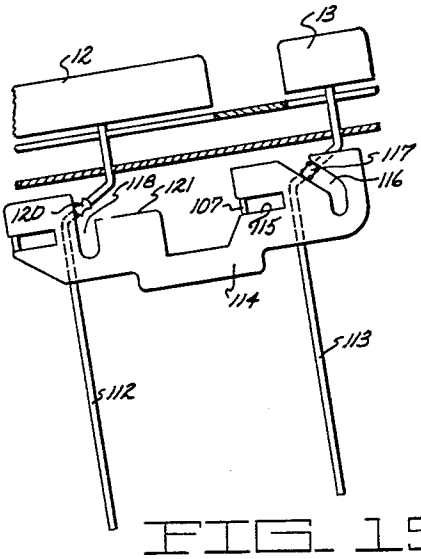

FIG. 19

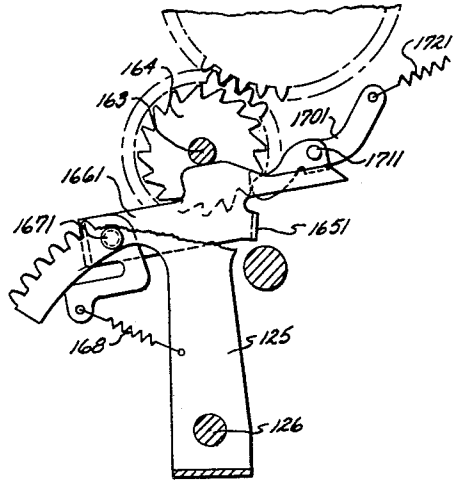

FIG. 20

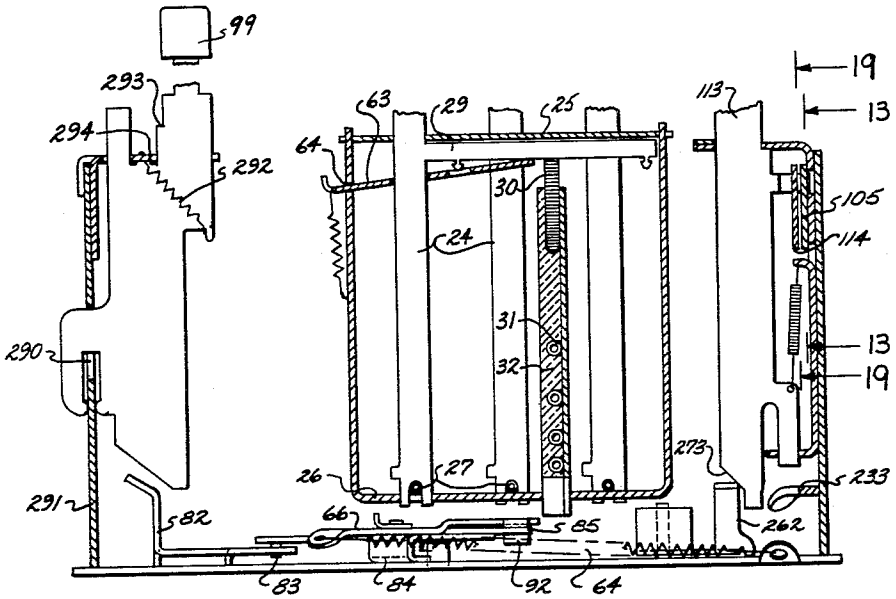

FIG. 21

INVENTORS
HUGH L. CLARY
BRYAN F. KUHNE
CHRIS A. CHRISTOFF
BY
ATTORNEY

Oct. 6, 1964 H. L. CLARY ETAL 3,151,546

CALCULATING MACHINE

Original Filed Sept. 25, 1961 9 Sheets-Sheet 8

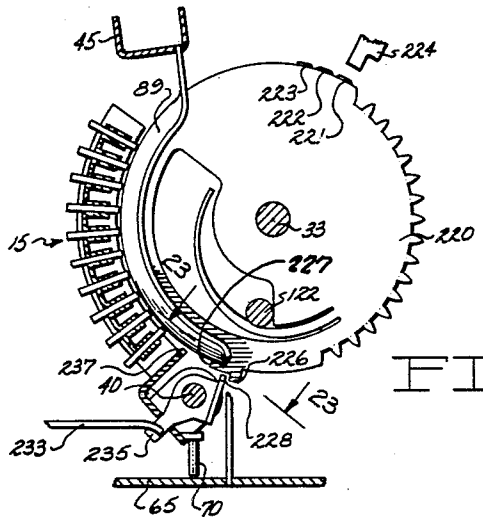

FIG. 22

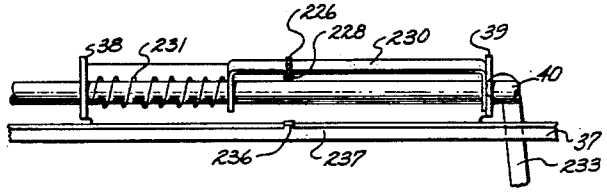

FIG. 23

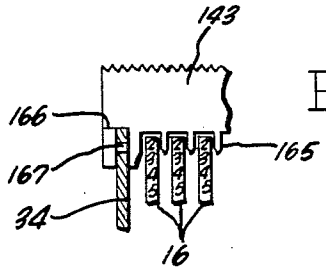

FIG. 27

INVENTORS
HUGH L. CLARY
BRYAN F. KUHNE
BY CHRIS A. CHRISTOFF
ATTORNEY

Oct. 6, 1964 H. L. CLARY ETAL 3,151,546

CALCULATING MACHINE

Original Filed Sept. 25, 1961 9 Sheets-Sheet 9

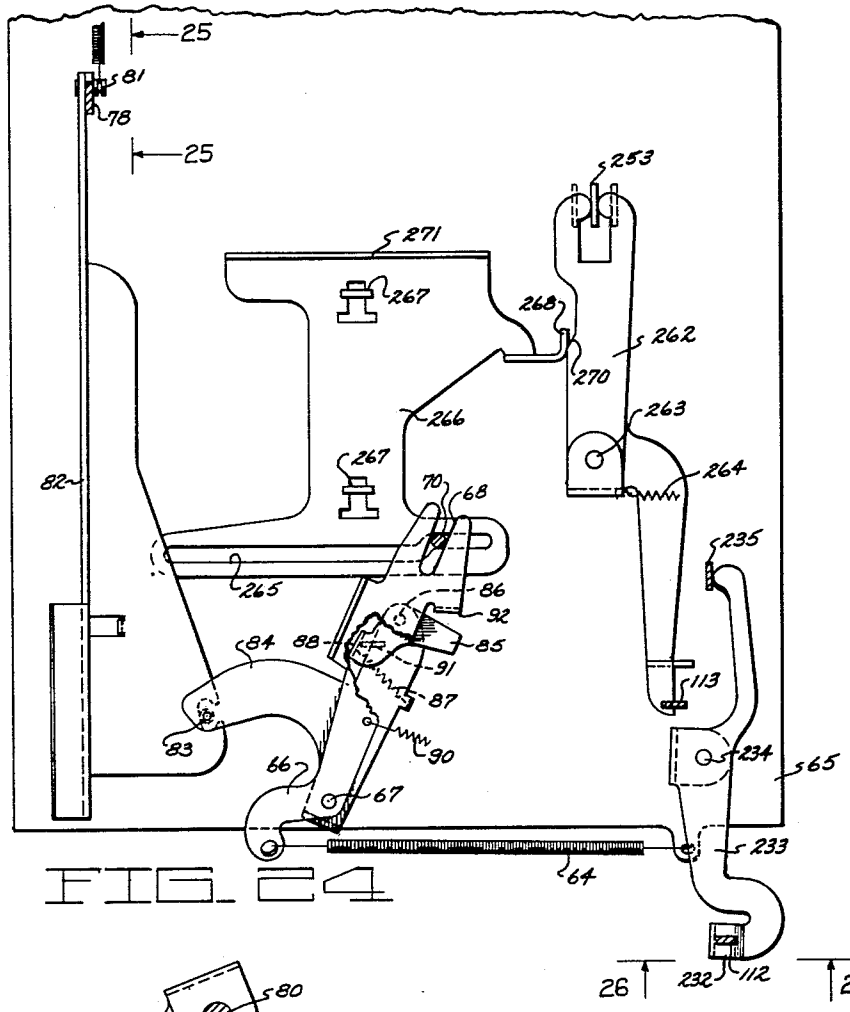

FIG. 24

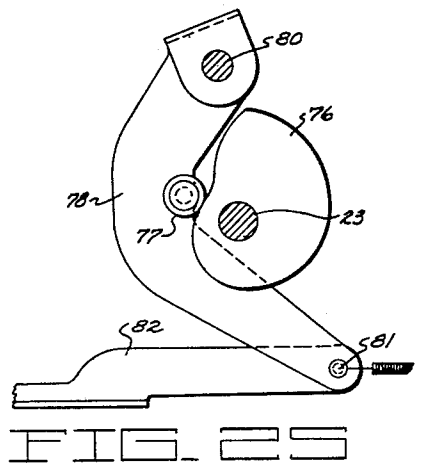

FIG. 25

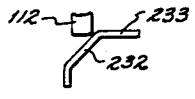

FIG. 26

INVENTORS
HUGH L. CLARY
BRYAN F. KUHNE
BY CHRIS A. CHRISTOFF
ATTORNEY

United States Patent Office

3,151,546

Patented Oct. 6, 1964

3,151,546

CALCULATING MACHINE

Hugh L. Clary, San Marino, Bryan F. Kuhne, Monrovia, and Chris A. Christoff, San Gabriel, Calif., assignors to Addmaster Corporation, San Gabriel, Calif., a corporation of California

Original application Sept. 25, 1961, Ser. No. 140,336. Divided and this application Oct. 19, 1962, Ser. No. 237,426

6 Claims. (Cl. 101—93)

This invention relates to calculating machines and the like and has particular reference to printing devices for such machines.

A principal object of the present invention is to provide a printing device for a machine of the above general class which is highly reliable and yet simple and relatively easy to manufacture and assemble.

Another object is to provide a printing device in which individual printing hammers effect printing impressions, upon impact, through a paper record medium.

A still further object is to provide a machine of the above class in which different single parts perform a plurality of functions whereby to reduce the total number of parts in the machine.

The manner in which the above and other objects are accomplished will be readily understood on reference to the following specification when read in conjunction with the accompanying drawings, wherein:

FIG. 1 is a longitudinal sectional view of an adding-listing machine embodying a preferred form of the present invention.

FIG. 2 is a sectional plan view illustrating part of the pin carriage and is taken along the line 2—2 of FIG. 1.

FIG. 3 is a perspective view of the pin carriage.

FIG. 4 is an enlarged sectional view through a portion of the pin carriage.

FIG. 5 is a sectional plan view illustrating the printing sectors and part of the main drive mechanism and is taken substantially along the line 5—5 of FIG. 1.

FIG. 6 is a sectional view taken along the line 6—6 of FIG. 5 illustrating mainly the accumulator control cam and associated follower.

FIG. 7 is another sectional view through the accumulator control cam and is taken along the line 7—7 of FIG. 5.

FIG. 8 is another sectional view through the accumulator control cam and is taken along the line 8—8 of FIG. 5.

FIG. 9 is a sectional view illustrating the sector, ribbon and zero elimination drive mechanism and is taken substantially along the line 9—9 of FIG. 5.

FIG. 10 is a sectional view illustrating the aligner control cam operating mechanism.

FIG. 11 is a plan view taken along the line 11—11 of FIG. 9 illustrating the mechanism for operating the printing ribbon and zero elimination control slides.

FIG. 12 illustrates a timing chart of the machine.

FIG. 13 is a sectional view illustrating the clutch control and is taken along the line 13—13 of FIG. 5.

FIG. 14 is a sectional view taken substantially along the line 14—14 of FIG. 1 illustrating the printing ribbon and zero elimination control slides in normal retracted condition.

FIG. 15 is a sectional view similar to FIG. 14 but is taken substantially along the line 15—15 of FIG. 1 illustrating the printing ribbon and zero elimination control slides in extended conditions.

FIG. 16 is a transverse sectional view through the combined ribbon magazine and inker and is taken along the line 16—16 of FIG. 15.

FIG. 17 is a sectional view through the combined ribbon magazine and inker and is taken along the line 17—17 of FIG. 16.

FIG. 18 is a sectional plan view through the printer and is taken substantially along the line 18—18 of FIG. 1.

FIG. 19 is a sectional view illustrating the interlock slide for the machine control bars.

FIG. 20 is a sectional view illustrating the paper advance mechanism and is taken along the line 20—20 of FIG. 5.

FIG. 21 is a transverse sectional view through the keyboard and is taken along the line 21—21 of FIG. 1.

FIG. 22 is a sectional view through the pin carriage illustrating part of the controls for the symbol print sector.

FIG. 23 is a sectional plan view taken along the line 23—23 of FIG. 22.

FIG. 24 is a sectional plan view taken substantially along the line 24—24 of FIG. 1 illustrating part of the accumulator controls and pin carriage return mechanism.

FIG. 25 is a sectional side view of the pin carriage return cam and follower and is taken along the line 25—25 of FIG. 24.

FIG. 26 is a fragmentary view taken in the direction of the arrow 26 in FIG. 24.

FIG. 27 is a sectional view, partly broken away, and taken along the line 27—27 of FIG. 1, illustrating the transparent tear-off bar.

This application is a division of the copending application Serial No. 140,336, filed September 25, 1961, for Calculating Machine.

General Design

The present invention is disclosed as associated with a ten-key adding-listing machine. However, it should be understood that the same, at least in its broader aspects, could be equally well associated with other types of printing machines of this general class.

Digits of a value are entered into the machine through ten amount keys, four of which are shown at 11, which keys range in value from 0 to 9. Operation of the machine to perform digit entry and total or subtotal functions is controlled by an add-subtotal depressible control bar 12 and a subtract-total bar 13 (FIGS. 13 and 19).

Depression of an amount key sets an appropriate stop pin 14 (FIG. 1) in a pin carriage, generally indicated at 15, which shifts laterally of the machine into cooperative relation with combined differential actuators and printing sectors 16. Each of the latter carries a series of type characters 17 on its periphery, ranging from 0 to 9, the character 0 being located at the clockwisemost location relative to the rest of the series.

The sectors 16 cooperate with a printing mechanism, generally indicated at 18, to print amounts registered by the sectors 16 onto a paper strip 20. The sectors also cooperate with an accumulator, generally indicated at 21, to enter amounts therein or to remove accumulated amounts during totaling and subtotaling operations.

The machine is driven by an electric motor (not shown) through a cyclically operable clutch, generally indicated at 22 (FIGS. 5 and 13), the clutch being effective to drive a main shaft 23 (FIGS. 1, 6, 9, 10, 13 and 25) one complete revolution during each cycle of operation. The shaft 21 carries various cams, to be described hereinafter, for driving different operating units of the machine in proper timed relation and for advancing the paper strip one increment as an incident to each cycle.

Keyboard

The amount keys 11 are mounted on key stems 24 (FIGS. 1 and 21) which are slideable vertically in slots provided in upper and lower key frame plates 25 and 26,

respectively, forming part of the framework of the machine. Tension springs 27 attached at their ends to the lower frame plate 26 extend under the key stems to normally hold the amount keys in raised positions. Such springs extend across openings 28 in the plate 25 to permit depression of the keys.

Each key stem has an extension 29 which is attached to the upper end of a respective flexible cable 30. The various cables are vertically aligned with each other and are slideably mounted for endwise movement in grooves 31 formed in a guide block 32 suitably attached to the lower frame plate 26. The various cables 30 terminate in an arcuate pattern concentric with a shaft 33 which rotatably supports the sectors 16. The shaft is rotatably mounted in bearings formed in side frame plates 34 and 35 (FIG. 5) forming part of the machine framework.

Pin Carriage

The pin carriage 15 (FIGS. 1, 2, 3, 4, 22 and 23) is formed of an arcuate body 36 of plastic or the like mounted within an enclosing frame 37. The latter is provided with bearing tabs 38 and 39 at its lower end which are slideably mounted on a stationary rod 40 extending across the machine and suitably supported in frame plates 41 and 42 forming part of the machine framework.

The pin carriage has an extension 43 which projects through a slot 44 in a channel member 45 secured at its ends to the frame plates 41 and 42. A slide 46 attached to the extension 43 is guided by the channel member to likewise guide the upper end of the pin carriage across the machine. The extension 43 also extends through a slot 47 in a machine cover 48 and terminates in a knob 50, permitting the pin carriage to be returned manually to its home position shown in FIG. 2, if so desired.

The stop pins 14 are slideably mounted for endwise movement in a field of openings in the pin carriage body 36. Each pin has a head 51 and a body which is bifurcated to form two spring legs 52 which yieldably press outwardly against the adjacent edges of a respective opening in the pin carriage body, thereby frictionally maintaining the pin in either of two positions to which it may be set.

It will be noted that the stop pins 14 are arranged in a plurality of vertical columns and are located in horizontal rows aligned with the lower ends of the flexible cables 30. Thus, upon depression of a selected amount key 11, the respective cable 30 will be moved endwise to likewise move an aligned stop pin from its normal ineffective position shown in FIGS. 1, 3 and 4 to a position wherein it forms an abutment in the path of a shoulder 53 formed on an aligned sector 16.

An additional row of escapement pins 54, similar to pins 14, are located above the latter pins. Such pins cooperate with a stop shoulder 55 (FIGS. 1 and 2) extending downwardly from the channel member 45 to normally maintain the pin carriage in its home or any other denominational position. The pins 54 are aligned with the various vertical columns of pins 14 and are engageable by a finger 56 of a bail 57 which is pivotally supported at 58 in frame plates 60 and 61 forming part of the machine framework for movement about a horizontal axis. The bail 57 is pivotally connected at 62 to a second bail 63 (see also FIG. 21) which is pivotally supported at 64 from movement about an axis extending longitudinally of the machine. The bail 63 underlies the extensions 29 of the amount keys so that upon depression of any thereof the bail will rock bail 57 to depress whichever escapement pin is aligned with the finger 56.

The pin carriage 15 is urged to the left in FIGS. 2 and 5 by a tension spring 64 (FIG. 24) connected between a part of a bottom frame plate 65 and a lever 66 fulcrummed at 67 on the plate 65 and provided with a slot 68 which embraces a pin 70 depending from the pin carriage. Thus, upon depression of any amount key to set an appropriate stop pin 14, the bails 63 and 57 will depress an aligned escapement pin 54, permitting the pin carriage to escape one column to the next wherein the next escapement pin 54 will arrest against the stop shoulder 55.

A zero stop blade 71 is pivotally supported at 72 in the pin carriage frame 37 for movement about a horizontal axis and is urged upwardly by a spring (not shown) toward a position in blocking relation with the shoulders 53 of those sectors 16 with which it is aligned. The blade 71 has its forward edge 73 aligned with the lower or zero row of stop pins 14 so as to block the aligned sectors 16 at zero registration.

A cam formation 74 is formed on the blade 71 and when the pin carriage is in its home position, as depicted in FIG. 3, the cam formation will cam against a ledge 75 on the frame plate 60, moving the blade downwardly out of blocking relation with the sectors. Therefore, during totaling and subtotaling operations wherein the pin carriage is located in its home position, as depicted in FIG. 3, the blade 71 will permit all sectors 16 to be differentially advanced under control of the accumulator.

Pin Carriage Return Mechanism

During the latter stages of a machine cycle, the pin carriage is returned to its home position shown in FIGS. 2 and 5 by a cam 76 (FIG. 25) carried by the drive shaft 23. The cam 76 engages a roller 77 on a cam follower lever 78 which is pivotally supported at 80 and is pivotally connected at 81 to a link 82 (see also FIG. 24). The latter is coupled through a pin and open slot connection 83 to a bell crank 84 fulcrummed at 67 independently of the lever 66. A bypass pawl 85 is pivoted at 86 on the bell crank and is urged counterclockwise relative thereto by a tension spring 87 extending between an ear 88 on the bypass pawl and a part of the bell crank.

The cam 76 is effective to cause link 82 to first swing the bell crank 84 counterclockwise of its position illustrated in FIG. 24 against the action of a relatively strong tension spring 90. During this movement, the ear 88 on pawl 85 will recede from a stationary projection 91, allowing the spring 87 to rock the pawl counterclockwise and into the path of movement of an ear 92 on the lever 66. Accordingly, during clockwise return movement of the bell crank 84 under the action of spring 90, the pawl 85 will engage the ear 92, causing the lever 66 to drive the pin carriage to the right toward its home position against the action of the relatively weaker spring 64. During this movement of the pin carriage, depressed ones of the stop pins will engage a stationary arcuate cam 89 (FIG. 22) extending between the channel member 45 and the plate 65, camming those stop pins outwardly to their normal positions.

As the pin carriage moves into its home position, the ear 88 will strike the projection 91, rocking the pawl 85 clockwise so that it will pass below the ear 92. The pin carriage is thus freed of the bypass pawl so that it may again be indexed to the left by depression of the amount keys.

Means are provided to perform repeat operations. For this purpose, a repeat key 99 (FIG. 21) is provided, the stem of the latter being slideable vertically in a slot 290 formed in a frame plate 291. A tension spring 292 urges the key into its upper illustrated position. Upon depression of the repeat key, an inclined camming surface 293 on its stem will cam the link 82 to the left in FIG. 24 sufficiently to uncouple the link from the bell crank 84 so that the link will be ineffective to return the pin carriage. The spring 292 is also effective to hold the depressed repeat key in a position slightly cocked to the left wherein a latching shoulder 293 on the key stem is effective to latch under a ledge 294.

Main Drive and Controls Therefor

The machine is driven by a suitable motor (not shown) through the cyclic clutch 22 (FIGS. 5 and 13). The latter comprises a pawl 94 pivotally supported at 95 on a

disc 96 attached to the drive shaft 23. The pawl is urged toward driving engagement with a drive ratchet 97 by a yieldable tail 98 on the pawl, which tail engages a pin 100 on the disc. However, normally, the pawl is held out of driving engagement with the ratchet by a clutch dog 101. The latter is provided with slots 102 which slideably embrace frame studs 103 whereby to guide the clutch dog in and out of blocking engagement with the clutch pawl 94.

The clutch dog is coupled at 104 to a control slide 105 having slots 106 which are guided over stationary projections 107 extending from the machine framework, the slide being urged to the right in FIG. 13 by a tension spring 108 to normally maintain the clutch in its illustrated disengaged condition.

The control slide 105 has inclined camming surfaces 110 engageable by projections 111 extending laterally from stems 112 and 113 on which the control bars 12 and 13, respectively, are mounted. Thus, when one or the other of such control bars is depressed, the clutch dog 101 will be withdrawn to cause a cycle of operation. An ear 109 on the clutch dog is effective, when the latter is actuated, to close contacts 119 located in the power circuit of the drive motor for the machine.

In order to prevent simultaneous depression of the control bars 12 and 13, an interlock slide 114 (FIG. 19) is provided, the latter having slots 115 thereon guided over the stationary projections 107. An inclined guideway 116 in the interlock slide 114 embraces a projection 117 on the stem 113 while a vertical slot 118 in the slide underlies a projection 120 on the stem 112. Thus, depression of the bar 13 will cause the slide 114 to move to the left to position a shoulder 121 directly below the projection 120 to prevent concurrent depression of the bar 12. On the other hand, depression of the bar 12 will lower the projection 120 into slot 118 to prevent shifting of the slide 114 by depression of the bar 13.

Sector Drive

The various printing sectors 16 are yieldably driven clockwise from their home positions illustrated in FIG. 1 during digitizing and totaling operations by a bail rod 122. The latter is mounted at its opposite ends on gear sectors 123 and 124 (FIGS. 5 and 9). The sector 124 meshes with a second sector 125 pivoted on a shaft 126 and carrying a roller 127 which engages a cam groove 128 formed in a cam 130 suitably attached to the drive shaft 23.

The bail rod 122 extends through openings 131 in the various sectors 16 and is normally engaged by a detent shoulder 132 formed on a yieldable tail 133 extending integrally with each sector. As the bail rod is rocked clockwise from its home position, it will correspondingly rock the sectors 16 through engagement with the detent shoulders 132 until they strike depressed stop pins 14 in the pin carriage during digit entry operations or until they are arrested by the accumulator during totaling and subtotaling operations, whereupon the detenting shoulders 132 on the tails 133 will yield, permitting the bail rod to proceed to the limit of its excursion.

It should be noted at this time that each sector 16 has a pin 129 thereon which arrests against a stationary comb plate 134 after the sector has advanced 9 increments.

After the printing phase of a machine cycle, the bail rod 122 will be returned by the cam 130 and, in doing so, the frictional engagement between the bail rod and the tails 133 will drive the sectors slightly beyond, i.e., approximately 2°, counterclockwise of their zero positions where they are arrested by the comb plate 134, the latter being engaged by pin 135 extending from the sectors. The bail rod will continue to slide along the tails 133, coming to rest adjacent edges 136 of the respective shoulders.

Printer and Paper Feed

As noted heretofore, the sectors 16 cooperate with the printing mechanism 18 to print amounts registered by the sectors onto the paper strip 20.

The strip 20 is fed from a supply roll 137, between feed rolls 138 and 139, through a guideway 140 and past a printing station located betwen the sectors 16 and respective printing hammers 141. From such station, the strip is guided upwardly at substantially 90° over a stationary guide plate 142 and behind a transparent tearoff bar 143. It will be noted that the strip is deflected upwardly in a relatively sharp bend by the tearoff bar.

The hammers 141 are guided for endwise movement at their upper ends in guide slots formed by a cross brace 144 extending between the frame plates 60 and 61. The lower ends of the hammers have slots 145 which are guided over a guide bar 146 also extending between the frame plates 60 and 61.

A leaf spring 147 (see also FIG. 18) is secured by rivets 148 to the underside of the bar 144 and is formed into a plurality of spring fingers 150 at its forward end, each engaging in a notch 151 in a respective hammer whereby to urge the hammers downwardly toward printing contact with the paper strip. However, the spring fingers are normally prevented from actuating the hammers by a bail 152 pivotally supported on a cross rod 153. The bail 152 overlies a cam 154 carried by a rotatable shaft 155. The latter carries a gear 156 (FIG. 10) which is entrained with a gear 157 fixed on the drive shaft 23 through an idler gear 158.

During the printing phase of the machine cycle (see FIG. 12, item 2), a shoulder 160 on the cam 154 passes one edge of an opening 161 in the bail 152, permitting the spring fingers 150 to impel those hammers 141, which are otherwise allowed to do so, downwardly to effect an imprint of aligned type characters. Immediately thereafter, the cam 154 is effective to retract the hammers to their normal upper positions.

Means are provided for incrementally advancing the paper strip 20 after a printing operation to render the last printed line visible through the transparent tearoff bar 143. For this purpose, the feed roller 138 is fastened to a rotatable shaft 163 to which is also fastened a ratchet wheel 164 (FIG. 20). The latter is engageable by an ear 1651 of a pawl 1661 which is pivotally mounted at 1671 on the aforementioned gear sector 125. A tension spring 168 extending between the pawl and the gear sector 125 urges the pawl toward engagement with the teeth of the ratchet wheel so that during the latter half of a cycle, the pawl will be effective to advance the ratchet wheel. A detent lever 1701 is pivotally supported at 1711 and urged clockwise by a tension spring 1721 to detent the ratchet wheel 164 and, consequently, the fed roll 138 in their different positions.

The tearoff bar 143 is prismatic in cross section, as seen in FIG. 1, to render the last printed line located therebehind visible from above the machine. The tearoff bar is provided with comb teeth 165 (FIG. 27) which, when the bar is in its normal lower position, extend between adjacent sectors 16 to laterally guide the sectors along their upper sides and directly adjacent the printing point where the hammers 141 effect printing. This permits the bearings of the sector 16 to fit freely on the shaft 23 while insuring accurate lateral spacing of the printed characters. Also, the tearoff bar is provided with spaced arms 166 which are pivotally mounted at 167 on the machine frames, i.e. frame 34. When it is desired to thread a new strip 20 through the printer, the machine cover 48 is suitably removed from the machine and the tearoff bar is swung into its dotted line position 143*a* shown in FIG. 1, permitting the leading edge of the strip to be readily located over the guide bar 142. When the tearoff bar is returned to its lowered position, its rear surface extends parallel with the surface of the guide plate 142 to form a strip guiding channel.

An inked printing ribbon 170 (FIGS. 14 to 17, inclusive) is provided for transferring impressions from the sectors 16 to the strip 20. The ribbon is relatively short

and has the effective inking portion thereof normally housed within a cylindrical magazine 171. The latter comprises a side wall 172 to which is secured a cup-shaped shell 173. The flange has a tubular sleeve 174 integral therewith which, when the magazine is in place, fits over a stud 175 extending from a bracket 176 which is attached to the frame plate 60. The magazine is prevented from rotating by means of a stud 177 thereon which fits into a mating hole in the bracket.

A spool 178 is rotatably mounted on the sleeve 174 and is formed of two flanges 180 and 181 held in spaced relation to each other by four studs 182. A core 183 of felt or similar material impregnated with a suitable ink is attached between the flanges of the spool. One end of the printing ribbon 170 is attached to one of the studs 182 and is normally wrapped around the core 183 to transfer ink thereto.

A tension spring 184 is fitted over a partial annular flange 185 integral with the magazine side wall 172 and is attached at one end to a stud 186 integral with the side wall 172. The opposite end of the spring is attached to a stud 187 extending from the spool, thus tending to maintain a projection 179 on the ribbon spool against a stud 189 on the side wall 172 to likewise maintain the ribbon wrapped around the spool.

The free end of the ribbon is passed out through a slot 188 in the side of the magazine and over a roller 190 rotatably supported by the bracket 176. Thence, the ribbon is guided between the various sectors 16 and their respective hammers 141 directly below the path of the paper strip 20. The ribbon is guided around a second roller 191 carried by a slide 192 and is anchored at 193 to the frame plate 61.

The slide 192 is mounted for endwise movement in guides formed in the plates 60 and 61 and is normally urged to the left into its positions shown in FIG. 14 by a tension spring 194 extending between a suitable point on the framework and the right-hand end of the slide.

A cable 195 (FIGS. 9 and 11) is attached at one end 196 to the slide 192 and is guided over a stationary guide 197 extending from the side plate 61 and onto the periphery of a grooved pulley 198, being attached thereto at 200. The pulley is attached to a gear 201 which meshes with the aforementioned gear sector 125.

Normally, when the machine is in its full cycle or rest position, the spring 194 will hold the slide in its left-hand position shown in FIG. 14 and the magazine spring 184 will be effective to maintain the left-hand or inked portion of the printing ribbon within the magazine and wrapped in contact with the spool core 183.

Shortly after a machine cycle is initiated, the sector 125 will cause a pulley 198 and cable 195 to draw the slide 192 to the right into its position shown in FIG. 15 wherein the inked portion of the ribbon will be withdrawn from the magazine and will extend between the sectors 16 and the printing hammers 141. Subsequent to the printing operation, the sector 125 is retracted, allowing the slide 192 to be returned to its normal position.

Zero Elimination Device

Means are provided to prevent printing of zeros to the left of the highermost significant digit in an amount being printed. For this purpose, a sensing slide 210 (FIGS. 1, 14 and 15) is provided, the slide being mounted for endwise movement in guide slots formed in the frame plates 60 and 61.

It will be noted that the slide 210 lies parallel to and closely adjacent the ribbon actuating slide 192 and is provided with a projection 211 which, when the parts are in their normal position shown in FIG. 14, is held in engagement with an ear 212 on the slide 192 by a spring 213 tensioned between the two slides.

The slide 210 is substantially U-shaped, having a lower leg 214 which is guided in a guide slot 215 in the frame plate 60. The leg 214 is aligned with rectangular slots 216 in the sectors 16 only when the latter are in their zero positions shown in FIG. 1, but such leg is normally out of the path of the sectors as shown in FIG. 14.

The slide 210 is also formed with a ledge 216 which includes an extended hammer blocking section 217 normally lying to the left of the hammers 141 and terminating substantially in line with the right-hand end of the lower leg 214 thereof. However, when the slide 210 is moved to the right, the blocking section 217 moves into blocking relation with one or more shoulders 218 formed on the hammers 141.

It will be noted that the slides 192 and 210 are so related to the bail rod 122 that they will commence movement to the right as a unit concurrently with rocking of the bail rod to advance the sectors. However, the leg 214 is normally spaced a sufficient distance from the leftmost sector 16 (as seen in FIG. 14) so that it will not reach the same until the latter sector has advanced its slot 216 out of the path of the leg, if it is allowed to so advance.

Thus, for example, if the four leftmost sectors 16 are retained at 0 by the zero stop blade 71 (FIG. 3) as depicted in FIG. 15, the slide 210 will be advanced to the right along with slide 192 through the spring 213 until the leg 214 strikes the side of the sector which registers the highermost significant digit. Accordingly, the blocking ledge section 217 will block the four highermost hammers from printing. During return of the slide 192 in the latter half of the cycle, it will pick up the slide 210 to return the same to its normal left-hand position

Symbol Printing Controls

A symbol indicating the type of factor or result printed is produced by a special symbol sector 220 (FIGS. 5 and 22). The latter is rotatably mounted on the shaft 33 and is located to the right of the digit printing sectors 16. The symbol sector 220 is aligned with the left-hand row of stop pins 14 in the pin carriage when the latter is in home position, but is not controlled by these pins since, when such a pin is depressed, the pin carriage is concurrently advanced one step to the left to locate that pin in cooperative relation with the right-hand digit printing sector 16.

The symbol sector has a total symbol type character 221, a subtotal type character 222 and a minus type character 223 thereon, each cooperable with a special printing hammer 224 which is similar in construction to the printing hammers 141 except that it is provided with a special ledge 225 (FIG. 6), the function of which will be described later.

The symbol sector 220 has two abutment shoulders 226 and 227 thereon spaced both angularly and radially relative to each other.

The shoulder 226 is adapted to arrest against a stop projection 228 on a bail slide 230 (see also FIG. 23) when the pin carriage is in its home position and when the bail slide is in its illustrated position relative to the pin carriage. The bail slide is slideable on the rod 40 and is normally held in its position shown in FIG. 23 by a compression spring 231 extending between the slide and the bearing tab 38 of the pin carriage.

When a total operation is initiated, as will be described later, the pin carriage and slide 230 will be in their normal illustrated positions wherein the stop projection 228 is aligned with the symbol sector and accordingly will block the symbol sector in a position to effect an imprint of the total type character 221.

However, when a subtotal operation is initiated, the pin carriage will likewise be in its home position but depression of the add-subtotal bar 12 will have caused its stem 112 (FIGS. 24 and 26) to cam against an inclined edge 232 of a lever 233 fulcrumed at 234, causing its opposite end to engage a foot 235 on the slide 230, causing the latter to move to the left in FIG. 23 relative to the pin carriage so that the symbol sector 220 may advance to a position where the shoulder 227 thereof engages a second stop projection 236 on the pin carriage frame 37 (see also

FIG. 3). In this position, the subtotal type symbol **222** will be in position to effect a printing impression.

When an add or minus operation is initiated, the pin carriage will obviously be out of its home position wherein both stop projections **228** and **236** will be out of alignment with the symbol sector **220** whereupon the latter will be advanced until the shoulder **226** limits against the edge **237** of the pin carriage frame **37** in which case the minus type character **223** will be located in printing position.

As will be described later, the symbol type hammer **223** is prevented from operating during add operations.

Accumulator

The accumulator **21** and total stop mechanism is disclosed in detail and claimed in the copending application of R. E. Busch, Serial No. 130,078, August 8, 1961, for "Calculating Machine." Therefore, for the sake of brevity, such details are not disclosed herein and reference may be had to said application for a complete understanding of the accumulator and its operations.

However, it will be noted that the accumulator is of the crawl carry type comprising denominationally arranged gears **240** and other elements rotatably mounted on an accumulator shaft **241**. Normally, the accumulator is held in a lower position as shown in FIG. 1 wherein the accumulator gears are located out of mesh with gear sections **242** formed on respective ones of the sectors **16**.

During a digitizing phase of a machine cycle, the accumulator is raised to mesh the gears **240** with the sectors **16** so as to transfer digital amounts from the sectors into the accumulator. Likewise, during totaling and subtotaling operations, the accumulator is raised to mesh with the sectors for the purpose of transferring amounts from the accumulator to the sectors so that such amounts may be printed. During such totaling and subtotaling operations, total stop levers **243** pivoted on the shaft **126** are swung counterclockwise to positions wherein shoulders **244** thereon are engaged by zero stops in the form of zero stop shoulders **245** formed on accumulator elements **246**, when the latter reach their zero positions.

Accumulator Controls

The accumulator is meshed and demeshed with the sectors **16** at different times in a machine cycle as set forth in items 5, 6 and 7 in the timing diagram of FIG. 12, depending on whether additive or subtractive entries are being made or whether totaling or subtotaling operations are being performed.

For this purpose, an accumulator control cam **247** (FIGS. 5, 6, 7 and 8) is attached to the main drive shaft **23**. Such cam is provided with three axially spaced camways **248**, **250** and **251**, the camways being separated by broken flanges **252**.

A cam follower bail **253** is mounted on the shaft **126** for both pivotal and longitudinal movement thereon. A follower nose **254** is formed on the bail to follow a selected camway. The bail is connected through a pin and slot connection **255** with a camming bail **256** also pivoted on the shaft **126**. Bail **256** is provided with spaced arms having camming grooves **257** therein which embrace rollers **258** on opposite ends of the accumulator shaft **241**. Accordingly, when the bails **253** and **256** are rocked counterclockwise by a selected camway against the action of a tension spring **260**, they will cam the accumulator along suitable guides (not shown) into mesh with the sectors **16**.

It will be noted that the flanges **252** are broken at **261** to permit lateral shifting of the follower bail **253** when the machine is in full cycle position.

Means are provided to shift the follower ball **253** into cooperative relation with any of the camways on the cam **247**. For this purpose, the bail **253** has a depending leg which is engaged by a a bifurcated lever **262** (FIG. 24) pivotally supported at **263** and urged counterclockwise by a tensioned spring **264** tending to locate the nose **254** of the bail **253** in engagement with the camway **248** of the control cam **247**. In such case, the accumulator would be meshed with the sectors **16** during the return or counterclockwise rocking movements thereof as occurs during additive entry operations (see also item 7 of the timing diagram).

Now, the aforementioned stud **70** of the pin carriage is embraced within a slot **265** formed in a blocking plate **266**. The latter is slideably mounted for fore and aft movement of the machine on the bottom frame plate **65** through pin and slot connections **267**. When the pin carriage is moved into its right-hand or home position, the stud **70** cams the blocking plate forwardly into its position shown in FIG. 24, causing an ear **268** thereof to cam against an inclined edge **270** on the lever **262**, thus moving the latter into its neutral illustrated position wherein the cam follower bail **253** is positioned in cooperative relation with a central camway **250**. It will be noted on reference to FIGS. 6 and 12 (item 6) that the camway **250** has a high portion extending around the major part of its periphery whereby to maintain the accumulator in mesh with the sectors **16** during both the advance and retraction of the latter. This occurs during subtotaling operations of the accumulator.

Thus, when no amount has been entered into the pin carriage, i.e., when the pin carriage is in its home position, and the add-subtotal bar **12** (FIG. 13) is depressed to cause engagement of the clutch **22**, a subtotal operation will ensue. However, when an amount has been entered into the pin carriage, i.e., when the latter is moved out of its home position, the blocking plate **104** will be cammed rearwardly of its position shown in FIG. 12 permitting the lever **262** to rock counterclockwise, thus moving the follower bail **253** into cooperative relation with the camway **248**. Upon rearward movement of the blocking plate **266**, a blocking ledge **271** thereon (see also FIG. 1) is moved into blocking relation with lugs **272** formed on the zero stop levers **243**, thus preventing the latter from moving into zero blocking relation with the accumulator elements.

The stem **113** (FIGS. 21 and 24) of the subtract-total bar **13** has a camming edge **273** engageable with the forward end of the lever **262** so that upon depression of the bar **13** the lever **262** will be cammed clockwise to position the cam follower bail **253** in cooperative relation with the camway **251** of the cam **247**. As shown in FIG. 8 and item 5 of the timing chart, the camway **251** has a high portion so located as to mesh the accumulator with the sectors **16** during the early portion of a machine cycle or during advance of the sectors so as to effect a subtractive entry or totaling operation.

Means are provided for preventing printing of a symbol during additive entry operations and for this purpose, a lever **275** (FIG. 6) is provided having a slot **276** pivotally embracing a frame stud **277**. A stud **278** on the lever rides on a camming surface formed on the camming bail **256**. Normally, the stud **278** engages a low portion of the camming surface on the bail **256** whereby to locate an ear **279** under the ledge **225** of the symbol printing hammer **224**, thus blocking the same from printing.

During an add operation, as noted heretofore, the bail **256** will not be rocked counterclockwise from its position shown in FIG. 6 until after the printing operation so that the lever **275** will be effective to block the symbol printing hammer **224** from printing. However, in subtract entry, totaling and subtotaling operations, as noted in items 5 and 6 of the timing chart, the camming bail **256** will be rocked counterclockwise during the first portion of a cycle and will be retained there until after the printing operation whereby the high portion of the camming edge of the bail **256** will become effective to hold the lever **275** clockwise, allowing the hammer **224** to operate in the same manner as the remaining hammers.

Sector Aligner

In order to ensure proper alignment of the sectors **16** during a printing operation and to ensure proper meshing of the accumulator gears therewith, an aligner **280** (FIGS. 1 and 10) is provided which extends across the various sectors and is pivotally mounted at **281** on the arm of a bail **282** pivotally supported at **283** on the machine framework. A spring **284** is tensioned between the aligner and bail **282** to normally maintain the aligner in a counterclockwise rocked position relative to the bail and wherein a projection on the aligner engages a projection **289** on the bail.

The bail **282** is coupled through a pin and slot connection **285** to a cam follower bail **286** which is pivotally supported on the shaft **126** and carries a stud **287** held in engagement with the periphery of a cam **288** fastened to the shaft **23** by a tension spring **290**.

Just prior to the end of a machine cycle and just prior to a printing operation as depicted in the timing chart of FIG. 12 (item 4), the cam **288** causes bail **286** to rock the bail **282** counterclockwise, first moving the aligner **280** into engagement with the teeth of the sectors. As the bail **282** continues its movement, a toggle action results, causing the aligner **280** to retract the sectors counterclockwise slightly, i.e., approximately 2°. When such retraction occurs near the end of a cycle, the shoulders **53** are spaced sufficiently from alignment with the zero stop pins **14** that the pin carriage may be readily moved to successively higher denominational positions even though one or more zero pins **14** have been set without such zero pins engaging the shoulders.

Although the invention has been described in detail and certain specific terms and languages have been used, it is to be understood that the present disclosure is illustrative rather than restrictive and that changes and modifications may be made without departing from the spirit or scope of the invention as set forth in the claims appended hereto.

Having thus described the invention, what is desired to be secured by United States Letters Patent is:

1. In a printing calculating machine, a plurality of type members independently pivoted about a common axis, each of said type members having a plurality of type characters thereon, means for differentially setting said type members about said axis to present different type characters to a printing line, a plurality of elongate printing hammers, means for guiding said hammers endwise in a direction extending at least substantially radially of said type members, means for guiding a paper strip to said printing line between said type members and said hammers, channel means including a guide member extending across said hammers; said channel means forming a channel for guiding said strip from between said type members and said hammers and along the lengths of said hammers in juxtaposition thereto, said guide member having at least a portion through which said strip is visible; means for actuating said hammers toward said type members to form impressions on said paper strip at said printing line, and means adjacent the entrance to said guide means for advancing said strip, said last mentioned means being operable after actuation of said hammers whereby to render a printed impression on said strip visible through said guide member.

2. In a printing calculating machine, a plurality of type members independently pivotal about a common axis, each of said type members having a plurality of type characters thereon, means for differentially setting said type members about said axis to present different type characters to a printing line, a plurality of elongate printing hammers, means for guiding said hammers endwise in a direction extending at least substantially radially of said type members, means for guiding a paper strip to said printing line between said type members and said hammers, means forming a channel including a transparent member extending across said hammers for guiding said strip between said type members and said hammers and along the lengths of said hammers in juxtaposition thereto; means for actuating said hammers toward said type members to form impressions on said paper strip at said printing line, and means adjacent the entrance to said guide means for advancing said strip, said last mentioned means being operable after actuation of said hammers whereby to render a printed impression on said strip visible through said transparent member, said transparent member being of prismatic cross section whereby to refract an image of said printed impression upwardly.

3. In a printing calculating machine, a plurality of type members each having a plurality of type characters thereon, means for differentially setting said type members to present different type characters to a printing line, printing impression means, means for guiding a portion of a paper strip to said printing line intermediate said type members and said impression means, means for causing a printing impression between said type members and said impression means, means forming a channel including a transparent tear-off member for guiding another portion of said strip at substantially right angles to said first portion; and means adjacent said guide means for advancing said strip, said last mentioned means being operable in response to actuation of said impression means whereby to render a printed impression on said strip visible through said tear-off member.

4. In a printing calculating machine, a plurality of type members arranged in side by side relation, each of said type members having a plurality of type characters thereon, means for differentially setting said type members to present different type characters to a printing line, printing impression means, means for guiding a record medium intermediate said type members and said impression means, means for causing a printing impression between said type members and said impression means at said printing line, a tear-off member extending across said type members and across the path of said record medium for additionally guiding said record medium, guide means on said tear-off member for guiding said type members against movement toward and away from each other, and means supporting said tear-off member for movement toward and away from a position guiding said record medium and said type members.

5. In a printing calculating machine, a plurality of type members arranged in side by side relation, said type members being independently pivoted about a common axis, means for differentially setting said type members about said axis to present different type characters to a printing line, a plurality of elongate type hammers, means for guiding said hammers endwise in a direction extending at least substantially radially of said type members, means for guiding a paper strip between said type members and said hammers, additional means including a tear-off member extending across said hammers for guiding said strip; said tear-off member extending across said type members, guide teeth on said tear-off member extending between said type members for laterally guiding said type members, and means pivotally supporting said tear-off member for movement toward and away from a position guiding said strip and said type members.

6. In a printing calculating machine, a plurality of type members independently pivoted about a common axis, each of said type members having a set of type characters on the periphery thereof, means for differentially setting said type members about said axis to present different type characters to a printing line, a plurality of elongated printing hammers, means for guiding said hammers endwise in a direction extending at least substantially radially of said type members, means forming a first channel for guiding a paper strip to said printing line between said type members and said hammers, means forming a second channel for guiding said strip from said printing line and along the lengths of said hammers, means for actuating said hammers toward said type mem-

bers to form printed impressions on said paper strip at said printing line, a guide member forming part of said second channel, said guide member having a tear-off edge at the exit of said second channel, said guide member having at least a portion through which printed impressions on said strip are visable, and means adjacent the entrance of said first channel for advancing said strip through said channels after said formation of printed impressions whereby to render said printed impressions on said strip visible.

References Cited in the file of this patent

UNITED STATES PATENTS

1,700,699	Green	Jan. 29, 1929
2,649,732	Klaar	Aug. 25, 1953
2,724,328	Boyden et al.	Nov. 22, 1955
2,800,854	Werner et al.	July 30, 1957
2,818,018	Christoff et al.	Dec. 31, 1957
2,976,800	Gross et al.	Mar. 28, 1961