(12) PATENT **(11)** Application No. **AU 199644476 B2**
(19) AUSTRALIAN PATENT OFFICE **(10)** Patent No. **713859**

(54) Title
Biaxial inclination sensor

(51)[6] International Patent Classification(s)
G01C 009/26

(21) Application No: **199644476** (22) Application Date: **1996.02.13**

(30) Priority Data

(31) Number	(32) Date	(33) Country
7-25614	**1995.02.14**	**JP**

(43) Publication Date : **1996.08.22**
(43) Publication Journal Date : **1996.08.22**
(44) Accepted Journal Date : **1999.12.09**

(71) Applicant(s)
Nissho Corporation

(72) Inventor(s)
Hideo Agawa; Norihisa Teraji; Isshu Terauchi

(74) Agent/Attorney
PAUL R TAYLOR and ASSOCIATES,PO Box 742,SPIT JUNCTION NSW 2088

(56) Related Art
GB 665628
GB 2250600

Abstract of the Disclosure

An object of this invention is to eliminate causes of errors and provide a biaxial inclination sensor having high resolution and reproducibility and stability of detection with which it is possible to secure a high levelness of inclination angle zero by attitude control.

In the inner bottom of a circular liquid chamber 11 formed in a sensor holder 1 made of an insulating material and having a bottom surface 28 made horizontal are mounted one common electrode 2 made of 18K (Au) having a low ionization tendency in a central position and vertical with respect to the bottom surface 28 and four outer electrodes 3 made of the same material as the common electrode 2 and passing vertically through the bottom surface 28 at points of intersection of two horizontal orthogonal lines passing through the center and a circle of a predetermined radius about the center and all having the same surface area; an opening in the liquid chamber 11 of the sensor holder 1 is liquidproofly closed off by a glass window plate 4 having a spherical concave portion 9 of a surface roughness less than JIS Rmax 0.2S in its inner surface and a gas bubble 8 and an electrolyte 7 made by mixing pure water as a solvent, magnesium sulfate as a solute and anhydrous methanol as a solution in such ratios that the impedance between the electrodes is 10KΩ are sealed into the sealed liquid chamber

11 in amounts such that the common electrode 2 is always submerged in the electrolyte and does not make contact with the gas bubble 8.

Our Ref: NIS1

P/00/0011
Regulation 3.2

AUSTRALIA

Patents Act 1990

ORIGINAL

COMPLETE SPECIFICATION

STANDARD PATENT

Applicant:	Nissho Corpoation 3-31, Kusune 2-chome Higashi-Osakashi Osaka Japan
Address For Service:	PAUL R. TAYLOR & ASSOCIATES Patent and Trademark Attorneys PO Box 742 SPIT JUNCTION NSW 2088 Australia
Invention Title:	Biaxial Inclination Sensor
Inventor:	Hideo Ogawa Norihisa Teraji Isshu Terauchi

The following statement is a full description of this invention, including the best method of performing it known to me:

Title of the Invention

BIAXIAL INCLINATION SENSOR

Background of the Invention

1. Field of the Invention

This invention relates to a biaxial inclination sensor comprising a liquid and a gas bubble sealed in a vessel for sensing levelness by detecting the position of the gas bubble by means of electronic signals and is used in automatic leveling devices of machines and instruments, angle gauges, surveying devices, measuring instruments, airplanes, ships, trains, cars and other things and places where high-precision levelness is required.

2. Prior Art

Conventional biaxial inclination sensors of this kind include (1) those wherein in a sealed concave part serving as a circular liquid chamber formed by an electrode mounting plate and a warhead-shaped vessel of which an upper inner surface is formed into a spherical concave part in the center of the electrode mounting plate a common electrode and in positions at a predetermined spacing on radial lines about the common electrode outer electrodes the same height as the common electrode are respectively mounted vertically passing through the electrode mounting plate in a liquidproofly sealed state and an electrolyte and a gas are sealed inside the sealed concave part serving as a circular liquid chamber

and which detect inclination in two directions by detecting differences in the submerged height of the electrodes resulting from inclination of the surface of the electrolyte by means of electrical signals, and (2) those wherein the inside of a spherical vessel is filled with substances having different specific gravities and which do not mix with each other and the fact that due to gravity the substance with the lower specific gravity collects vertically upward is utilized and a positional relationship of the substances corresponding to the bearing and angle of an inclination of the vessel is detected by a detecting device disposed outside the vessel, using as the different substances a magnetic fluid or a permanent magnet and a non-magnetic substance, or a fluid having a high electrical conductivity and an electrically insulating substance, and according to the case inputting into a computing circuit and converting to and outputting as a vessel inclination direction and angle either a detection signal obtained by a magnetic detecting device by applying a magnetic bias in a fixed direction or an output signal corresponding to the size of a static capacity (for example Japanese Laid-Open Patent Publication No. H.3-142315).

The biaxial inclination sensors (1) described above have the object of inclination angle zero horizontal attitude control, but there has been the problem that these sensors cannot be made highly accurate for such reasons as that

changes in the vertical position of the liquid surface due to the expansion and contraction of the electrolyte caused by changes in the surrounding temperature of the sensor and changes in the characteristics of the electrolyte caused by temperature changes and instability of the contact surface due to surface tension of the liquid result in accuracy errors and errors of reproducibility and that liquid surface differences only produce small changes in output.

The biaxial inclination sensors(2) described above have the object of measuring overall bearing angle, but with these sensors there have been the problems that when a magnetic fluid is used its surface tension is large and for reasons relating to the frictional coefficient between the magnetic fluid and the inner wall of the vessel a high resolution cannot be obtained, and with magnetic lines of force or static capacity methods dependence on outside detecting devices is high and this becomes a cause of errors.

SUMMARY OF INVENTION

In one aspect the present invention consists in a biaxial inclination sensor comprising:

a sensor holder made of an insultating material and having a horizontal flat bottom surface and a concave portion serving as a liquid chamber formed in a central portion thereof,

a common electrode passing vertically and in a liquid-proof manner through the centre of an inner bottom of the concave portion serving as a liquid chamber,

AUSTRALIAN PATENT OFFICE

outer electrodes all having the same surface area and each projecting vertically higher than the common electrode and passing vertically and in a liquidproof manner through the inner bottom of the concave portion serving as said liquid chamber and respective said outer electrodes being located at points of intersection of two horizontal orthogonal axes passing through said inner bottom centre and a circle of a predetermined radius about said inner bottom centre,

a window plate of an insulating material closing an opening of the sensor holder in a liquidproof manner, at least a central part of a surface of which is formed into a spherical concave portion having high surface roughness with the spherical concave portion of the window plate facing inward and the centre thereof aligned with the centre axis of the common electrode, and

a gas bubble and an electrolyte having a plurality of components, the electrolyte having a low surface tension and the components thereof being mixed in a ratio such that the electrical impedance betwen the electrodes is a predetermined value, sealed in said concave portion serving as said liquid chamber in an amount such that the common electrode is always submerged in the electrolyte.

With a biaxial inclination sensor according to the

AUSTRALIAN PATENT OFFICE

invention constructed as described above, because the common electrode is positioned vertically below the center of a spherical surface in an inclination angle zero state (the completely horizontal state) and the common electrode is always submerged in an electrolyte having a low surface tension and mixed in a ratio such that the impedance between the electrodes is a predetermined value, when the gas bubble is displaced along the spherical surface due to an inclination the impedance between the electrodes changes as a result of this displacement, this change can be converted directly into an electrical signal and outputted as an analogue signal, and by controlling the analogue signal to zero with a controlling means using the analogue signal it is possible to obtain a levelness highly accurate at inclination angle zero.

Brief Description of the Drawings

Fig. 1 is an enlarged sectional view of a biaxial inclination sensor according to a first preferred embodiment of the invention;

Fig. 2 is a sectional view on the line A-A in Fig. 1;

Fig. 3 is a bottom surface view of the same biaxial inclination sensor;

Fig. 4 is an exploded sectional view of the same biaxial inclination sensor;

Fig. 5 is an enlarged sectional view of a biaxial

inclination sensor according to a second preferred embodiment of the invention; and

Fig. 6 is a view illustrating a sensor amplifier.

Detailed Description of the Preferred Embodiments

(First Preferred Embodiment)

Fig. 1 is an enlarged sectional view of a biaxial inclination sensor according to the invention, Fig. 2 is a sectional view on the line A-A in Fig. 1, Fig. 3 is a bottom surface view and Fig. 4 is an exploded sectional view.

A cylindrical sensor holder 1 is made of a polyamide synthetic resin and a bottom surface 28 thereof is finished to a highly accurate levelness; a concave portion serving as a liquid chamber 11 is formed in the middle of the sensor holder 1, and a female thread 12 and a supporting step 13 below that are formed around the opening of the liquid chamber 11.

A common electrode mounting hole 15 is provided in the center of the bottom 14 of the liquid chamber 11, and outer electrode mounting holes 16 are provided in the liquid chamber bottom 14 at the points of intersection of a 10mm diameter circle having the common electrode mounting hole 15 at its center and biaxial lines X, Y intersecting horizontally at right angles; a board recess 17 provided with a charging hole 18 passing through to the liquid chamber bottom 14 and mounting screw holes 25 around the circuit

board recess 17 are provided in the bottom surface 28.

A common electrode 2 and four outer electrodes 3 are made of 18K (Au), which is a metal material having a low ionization tendency, are 0.6mm in diameter and have polished surfaces, and the surface areas of the outer electrodes 3 are all the same.

The common electrode 2 is of a length such that it is always submerged in an electrolyte 7 and does not make contact with a sealed-in gas bubble 8 which will be further discussed later, the outer electrodes 3 are of such a length that their tips are as close as possible to the surface of a spherical concave portion 9 in a window plate 4 which will be further discussed later, and the common electrode 2 and the outer electrodes 3 are liquidproofly and vertically mounted in polyoxymethylene (for example Dellulin - registered trademark of Du Pont Co.) embedding members 19 in the common electrode mounting hole 15 and outer electrode mounting holes 16 provided in the liquid chamber bottom 14 of the sensor holder 1 with their front ends projecting into the liquid chamber 11 and their rear ends projecting from the circuit board recess 17 to the bottom surface side.

The window plate 4 is made of glass and mounted on a polytetrafluoroethylene (for example Teflon - registered trademark of Du Pont Co.) packing 10 on the supporting step 13 of the liquid chamber 11, and a spherical concave portion

9 of a suitable radius of curvature and a surface roughness made less than JIS Rmax 0.2S is formed over the entire inner-side surface of the window plate 4.

A brass holding ring 5 has a window hole 20 provided in its center, a pair of blind holes 21 for fastening formed in its upper surface and a male thread 22 for screwing into the female thread 12 formed on its outer surface, and fixes the window plate 4 to the sensor holder 1 by way of an annular cushion sheet 23 made of vinyl chloride.

An electrode support board 6 is dinner plate shaped in cross-section and has electrode holes 24 formed therein in positions corresponding to the centers of the common electrode mounting hole 15 and the outer electrode mounting holes 16, and is fitted or fixed with adhesive in the board recess 17 formed in the bottom of the sensor holder 1 with the rear ends of the electrodes projecting through the electrode holes 24.

Reference numeral 7 denotes an electrolyte and 8 a gas bubble; so as to have a low surface tension, a high boiling point and a low freezing point the electrolyte 7 consists of water (pure) as a solvent, magnesium sulfate as a solute and either anhydrous methanol or anhydrous ethanol as a solution mixed in such ratios that the impedance between the electrodes is 10KΩ, and an amount of the electrolyte 7 such that the common electrode 2 is always submerged is used; the

gas bubble 8 is an amount of air such that the common electrode 2 does not make contact therewith, and the electrolyte 7 and the gas bubble 8 are charged into the sensor holder 1 through the charging hole 18 provided in the bottom surface of the sensor holder 1.

(Second Preferred Embodiment)

A biaxial inclination sensor according to a second preferred embodiment of the invention will now be described with reference to Fig. 5. This biaxial inclination sensor comprises a glass hollow warhead-shaped member 26 having one end open and its upper inner surface formed into a spherical concave portion 9, a common electrode 2 and outer electrodes 3 mounted vertically with respect to a horizontal bottom surface 28 in the same way as in the first preferred embodiment and an electrode mounting plate 27 provided with a charging hole (not shown in the drawing; see Fig. 3); the open end of the hollow warhead-shaped member 26 is liquidproofly closed off by the electrode mounting plate 27 and the bottom surface 28 is horizontal; the common electrode 2 and the four outer electrodes 3, the surface roughness of the surface of the spherical concave portion 9, the electrolyte 7 and the gas bubble 8 are the same as in the first preferred embodiment and therefore have been given the same reference numbers and descriptions thereof will be omitted.

In this case, unlike the first preferred embodiment, because the holding ring 5, the packing 10 and the cushion sheet 23 are unnecessary the number of parts is reduced and the manufacture and assembly of the biaxial inclination sensor can be made simple and cheap.

As the common electrode 2 and the outer electrodes 3, a material having a low ionization tendency is suitable; because when the impedance between the electrodes is too high they pick up various kinds of noise and this produces errors and when it is too low this results in lack of economy and functional loss due to plating of the electrodes, the material of the electrodes should be decided with this taken into consideration.

The electrolyte 7 is not limited to the above-mentioned preferred embodiment, but it is necessary to use an electrolyte having a low surface tension, a high boiling point and a low freezing point.

As means for converting the position of a gas bubble directly into an electrical signal according to a biaxial inclination sensor S of either of the first and second preferred embodiments described above, for example means can be employed wherein as shown in Fig. 6 an alternating current of a basic pulse of 4KHz is produced by an oscillator OSC, this is divided into different pulses of 1KHz and 2KHz of duty 50% by a frequency divider F/F, these pulses are made

into negative phase alternating current pulses (X+, X-, Y+, Y-) by buffer amplifiers SP1 to SP4 and impressed on the outer electrodes 3 of the biaxial inclination sensor S; to extract information from this a signal from the common electrode 2 of the biaxial inclination sensor S is fed into a signal amplifying circuit AMP1, the output thereof is fed into an analogue switch MP through two amplifying circuits AMP2, AMP3 having a zero drift correcting function using variable resistors VR1, VR2, the above-mentioned two different pulses from the frequency divider F/F are synchronized into two axis directions in a logic circuit G and fed into the analogue switch MP, analogue signals of the two axis directions split in the analogue switch MP are respectively sent to amplifiers AMP4, AMP5 through sample and hold circuits SH1, SH2 and from these amplifiers AMP4, AMP5 are outputted individually as analogue signals corresponding to the axis directions. However it is not limited to this and changing to a conventional converting means would be a simple substitution and therefore included in the invention without influencing the scope of the claims thereof.

A biaxial inclination sensor according to the invention is used by being fixed to a level surface of an apparatus or device required to be disposed horizontally and this is kept level by conventional mechanical controlling means, for example by rotating motors for changing the inclination of

the X and Y axes according to digital signals converted by a signal convertor, converting this to linear motion and changing the inclination of the surface on which the sensor is mounted so that the analogue output thereof is controlled to zero.

With a biaxial inclination sensor according to the invention constructed as described above, because the common electrode is positioned vertically below the center of a spherical surface in an inclination angle zero state and the common electrode is always submerged in an electrolyte having a low surface tension and mixed in a ratio such that the impedance between the electrodes is a predetermined value, when the gas bubble is displaced along the spherical surface due to an inclination the impedance between the electrodes changes as a result of this displacement, this change can be converted directly into an electrical signal and outputted as an analogue signal, and by controlling the analogue signal to zero with a controlling means using the analogue signal it is possible to obtain a levelness highly accurate at inclination angle zero.

Particularly, by sealing into the sensor a gas bubble and an electrolyte having a low surface tension and mixed in a ratio such that the impedance between the electrodes is a predetermined value so that the common electrode is always submerged in the electrolyte, because conventional causes of

errors are eliminated and it is possible to solidly detect changes in the impedance between the electrodes produced by displacement of the gas bubble, the angle information output is high and output fluctuation errors caused by physical changes such as expansion and contraction and changes in the surface tension of the electrolyte due to changes in the surrounding temperature become very small, a high resolution and reproducibility are ensured and attitude control of a highly accurate zero inclination angle state of an apparatus in which the sensor is used can be achieved and it is possible to cheaply provide a biaxial inclination sensor most suitable for automatic leveling devices of machines and instruments, angle gauges, surveying devices, measuring instruments, airplanes, ships, trains, cars and other fields in which high-precision levelness is required.

WHAT IS CLAIMED IS:

1. A biaxial inclination sensor comprising:

a sensor holder made of an insultating material and having a horizontal flat bottom surface and a concave portion serving as a liquid chamber formed in a central portion thereof,

a common electrode passing vertically and in a liquid-proof manner through the centre of an inner bottom of the concave portion serving as a liquid chamber,

outer electrodes all having the same surface area and each projecting vertically higher than the common electrode and passing vertically and in a liquidproof manner through the inner bottom of the concave portion serving as said liquid chamber and respective said outer electrodes being located at points of intersection of two horizontal orthogonal axes passing through said inner bottom centre and a circle of a predetermined radius about said inner bottom centre,

a window plate of an insulating material closing an opening of the sensor holder in a liquidproof manner, at least a central part of a surface of which is formed into a spherical concave portion having high surface roughness with the spherical concave portion of the window plate facing inward and the centre thereof

AUSTRALIAN PATENT OFFICE

aligned with the centre axis of the common electrode, and

a gas bubble and an electrolyte having a plurality of components, the electrolyte having a low surface tension and the components thereof being mixed in a ratio such that the electrical impedance betwen the electrodes is a predetermined value, sealed in said concave portion serving as said liquid chamber in an amount such that the common electrode is always submerged in the electrolyte.

2. A biaxial inclination sensor as claimed in claim 1, wherein the common electrode and the outer electrodes are made of a metal material having a low ionization tendency and have polished surfaces and the surface areas of the outer electrodes are the same.

3. A biaxial inclination sensor as claimed in claim 1 or claim 2, wherein the surface roughness of the window plate is less than Japanese Industrial Standard Rmax 0.2S.

4. A biaxial inclination sensor as claimed in anyone of the preceding claims, wherein the electrolyte is a solution, said components being of pure water as a solvent, magnesium sulfate as a solute and one alcohol selected from the group consisting of anhydrous methanol and anhydrous ethanol in ratios such that impedance between the electrodes is 10KΩ.

AUSTRALIAN PATENT OFFICE

5. A biaxial inclination sensor as claimed in claim 1 or claim 2, comprising means for converting an alternating current into a predetermined basic pulse with an oscillator, dividing this basic pulse into two different pulses of duty 50% with a frequency divider, impressing the pulses on the outer electrodes as negative phase alternating current pulses with buffer amplifiers, extracting information from said sensor by impressing a signal from the common electrode into an amplifier circuit, feeding the output thereof through two amplifier circuits having a zero drift correction function into an analogue switch, respectively synchronizing the two different pulses from the frequency divider with two axis directions and feeding them into the analogue switch, sending analogue signals of two axis directions split in the analogue switch respectively through sample and hold circuits to amplifiers and outputting from the amplifiers predetermined analogue signals corresponding to an inclination.

6. A biaxial inclination sensor as claimed in anyone of the preceding claims wherein the the window plate is made of glass.

7. A biaxial inclination sensor as claimed in claim 2, wherein the common electrode and the outer electrodes are made of 18K Au.

AUSTRALIAN PATENT OFFICE

8. A biaxial inclination sensor substantially as hereinbefore described and with reference to the accompanying drawings.

AUSTRALIAN PATENT OFFICE

44476/96

Fig. 1

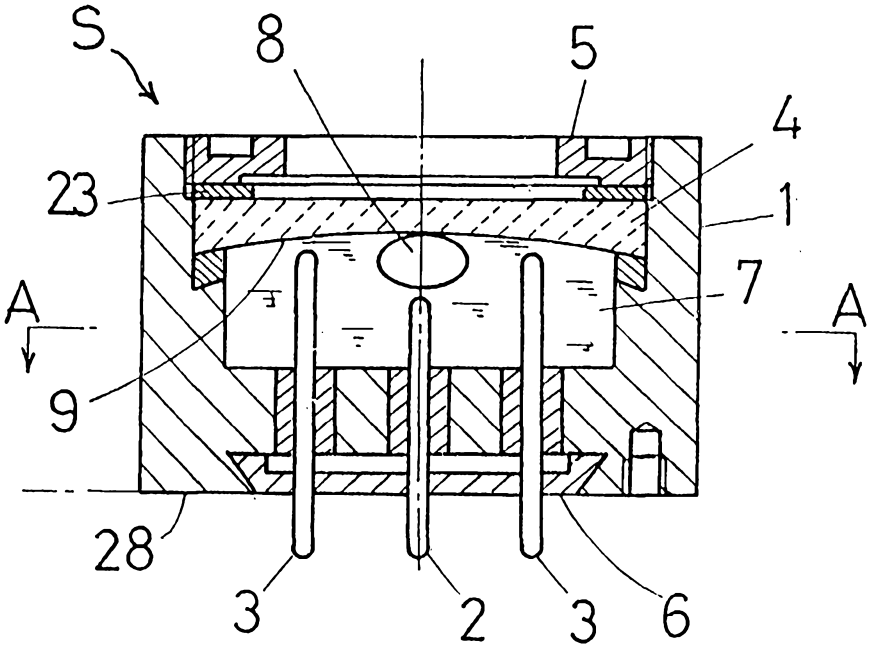

Fig. 2

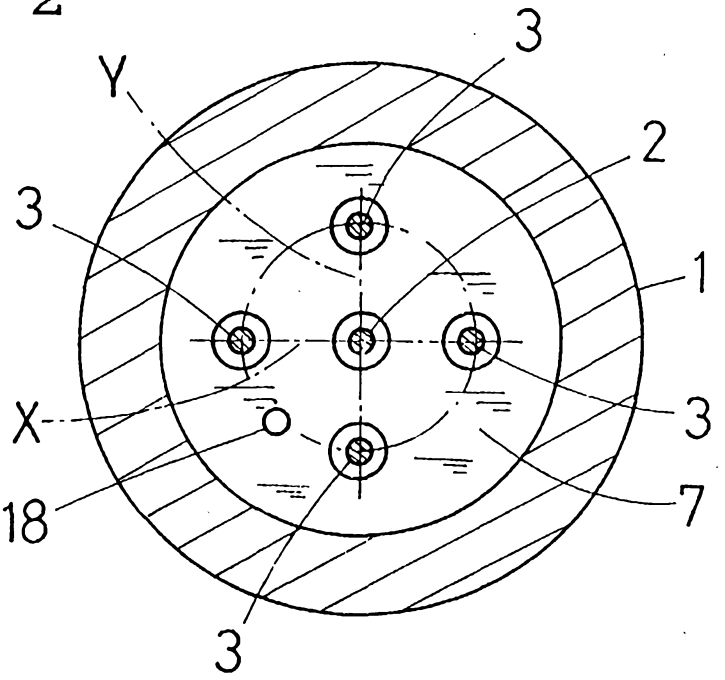

Fig. 3

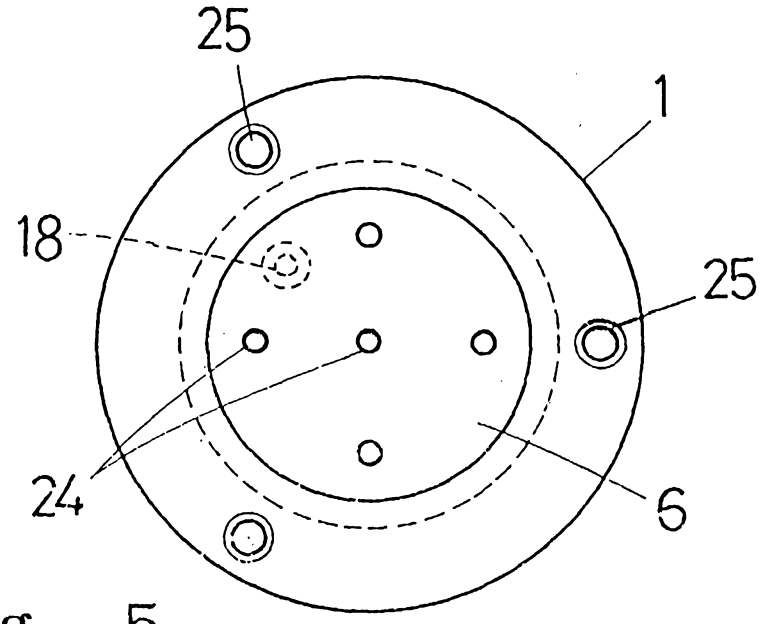

Fig. 5

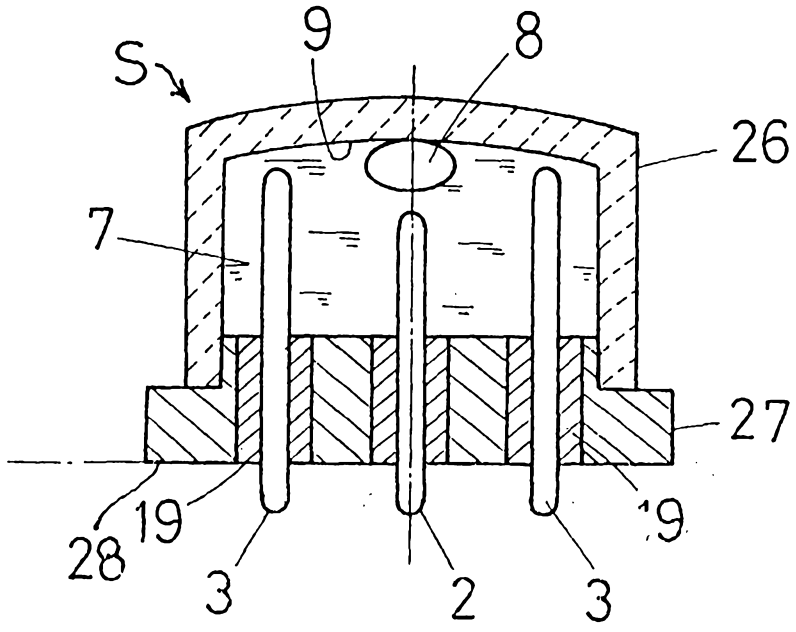

Fig. 4

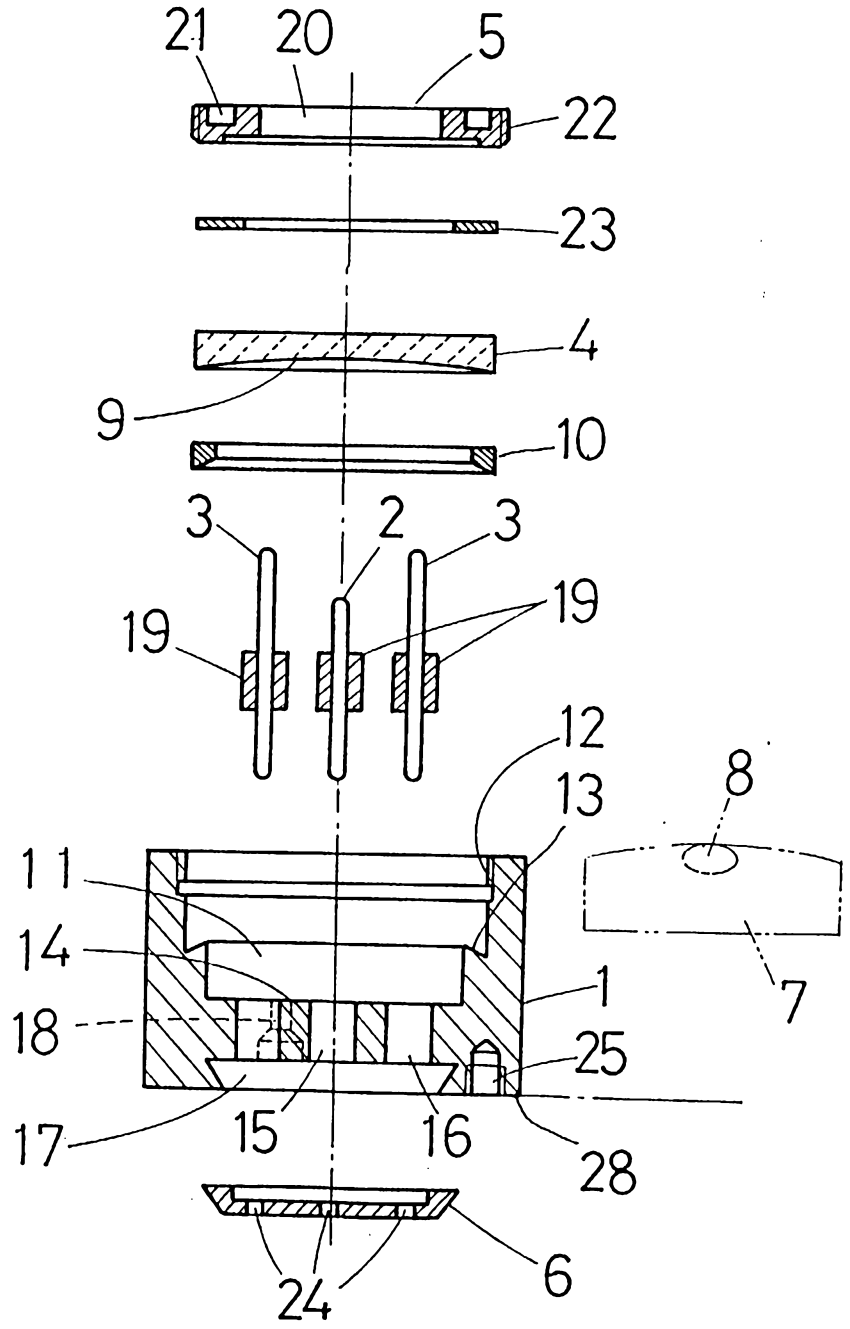

Fig. 6

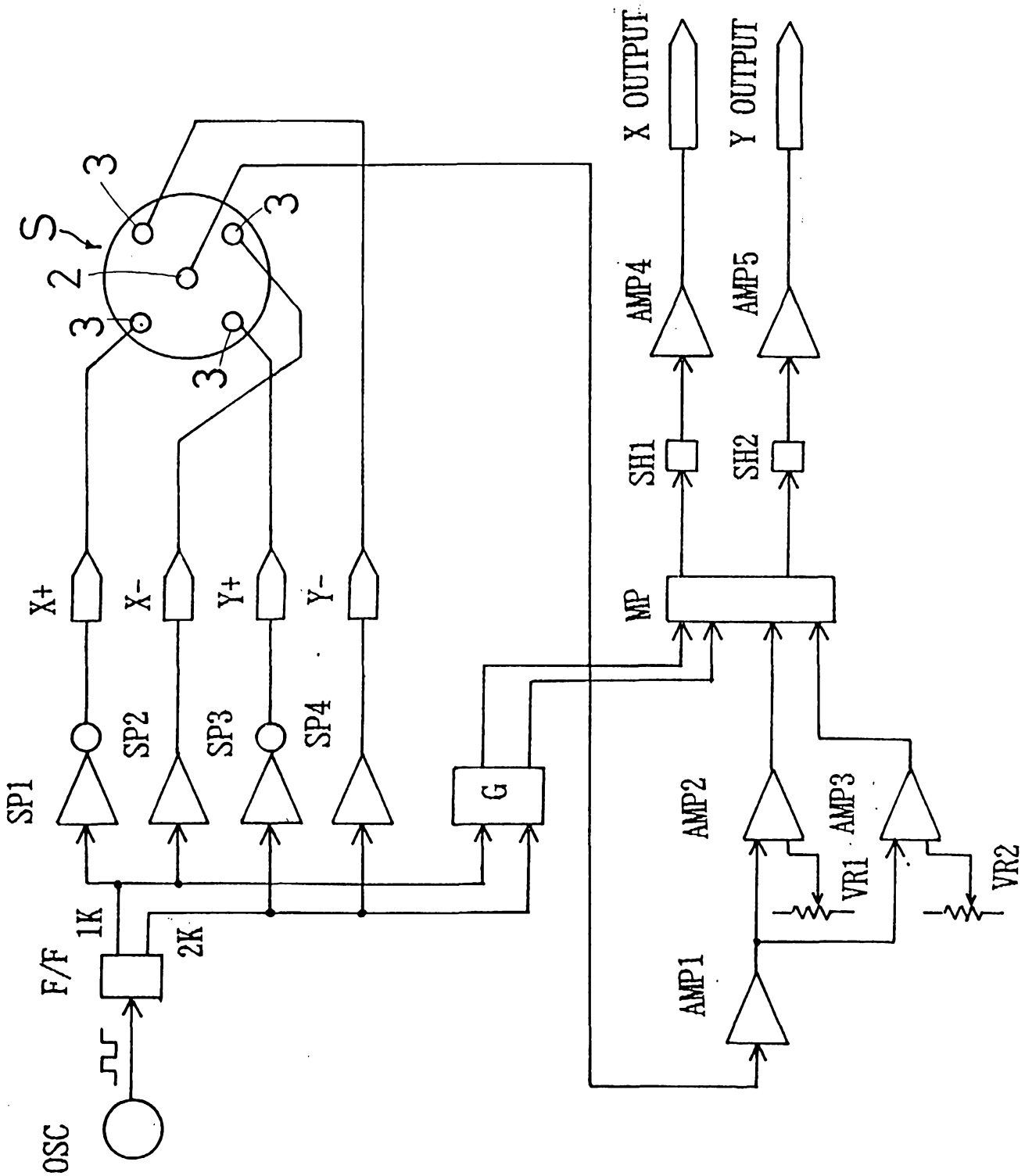
X OUTPUT
Y OUTPUT
AMP4
AMP5
SH1
SH2
MP
X+
X-
Y+
Y-
SP1
SP2
SP3
SP4
G
AMP2
AMP3
VR1
VR2
AMP1
F/F
1K
2K
OSC
S
3
2