June 28, 1955 A. O. PRILL 2,711,783

FOLDABLE PORTABLE SPORTSMAN SEAT

Filed Feb. 6, 1953

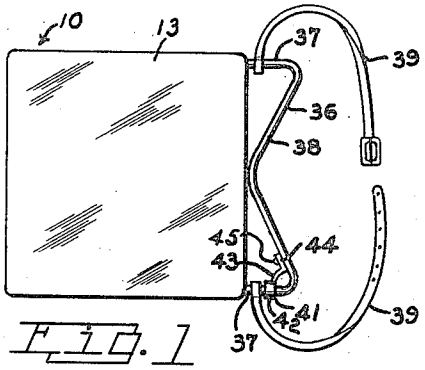

FIG. 1

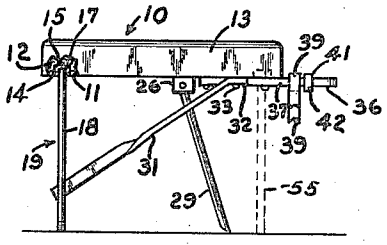

FIG. 2

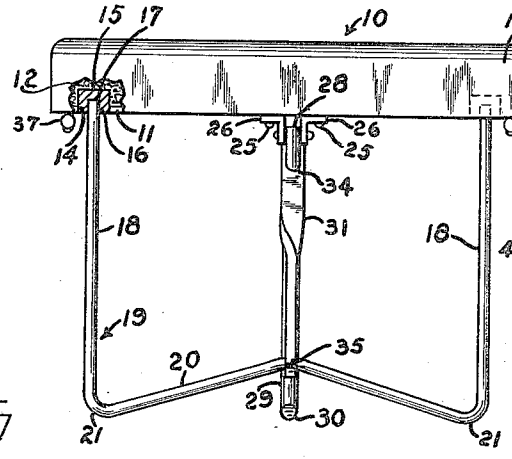

FIG. 3

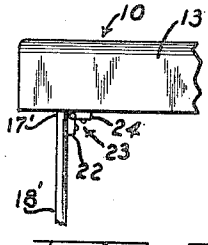

FIG. 5

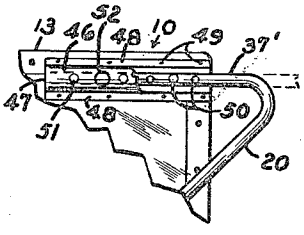

FIG. 6

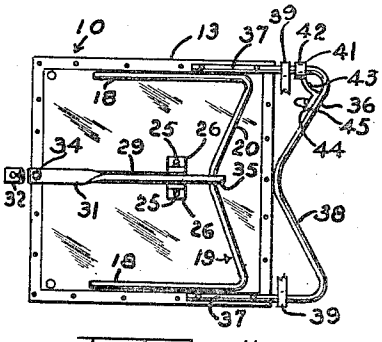

FIG. 4

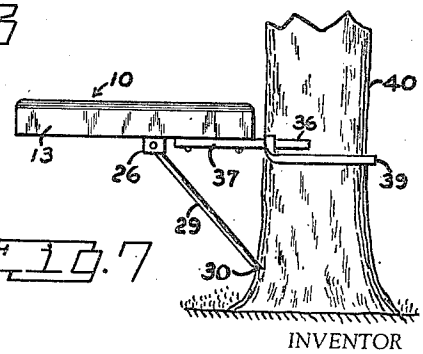

FIG. 7

INVENTOR

ALFRED O. PRILL

BY

J. B. Dickman, Jr.

ATTORNEY

United States Patent Office

2,711,783

Patented June 28, 1955

2,711,783

FOLDABLE PORTABLE SPORTSMAN SEAT

Alfred O. Prill, Romulus, Mich.

Application February 6, 1953, Serial No. 335,429

2 Claims. (Cl. 155—78)

The present invention relates to a portable sportsman's seat, so constructed that it may be readily carried in a compact form.

It is an object of the present invention to provide a seat having support elements that may be folded into a compact form.

Another object of the present invention is the provision of a portable sportsman's seat having means for engaging the trunk of a tree for supporting the seat and means for securing the seat to a tree.

A still further object of the present invention is the provision of means for supporting the seat from the ground or similar surface.

A still further object of the present invention is the provision of means for supporting a fishing rod.

A still further object of the present invention is the provision of detachable support means.

With these and other objects in view, the invention comprises novel features of construction and arrangement of parts which will be more fully described and claimed.

In the accompanying drawing:

Figure 1 is a top plan view of my improved sportsman's seat.

Figure 2 is a side elevational view showing the support elements in supporting position.

Figure 3 is a front elevational view of the seat shown in Figure 2.

Figure 4 is a bottom plan view of the seat and showing the support elements in folded position.

Figure 5 is a fragmentary view and showing a hinged support.

Figure 6 is a fragmentary view showing one leg to the tree engaging bar adjustable in a plate socket, and

Figure 7 is a side elevational view of the seat secured and supported to the trunk of a tree, some of the supporting elements being omitted.

Referring to the drawing in which like numerals designate like parts in the several views, the numeral **10** represents the seat, and it comprises a base **11** of wood or other suitable material, having suitable padding **12** and a cover **13** of plastic or other moisture resistant material. The base **11** is provided adjacent the front end of the seat with bores **14** that receive cups **15** having sockets **16**, and these sockets receive the ends **17** of legs **18** of a support frame **19**. The bridge **20** of the frame is deformed into a modified V-shaped configuration, the ends **21** being rounded, a portion of the rounded ends adapted for engagement with a surface such as the ground, the floor of a boat and ice. As shown in the modified view of Figure 5, the ends **17'** of the legs **18'** may be mounted to one leaf **22** of a hinge **23**, the opposite leaf **24** being secured to the base **11**.

To the base **11** there is secured by screws **25** or other suitable means, angle brackets **26** that are in spaced relation, and interposed between these angle brackets and pivotally connected by a pin is one end **28** of a support rod **29**, the opposite end **30** of this rod being beveled and pointed.

A reinforcing half-twist support bar **31** is provided and it has one end **32** secured to the base **11** by screws **33**. The bar **31** is provided with an aperture **34** through which passes the support rod **29**, the opposite end **35** of the half-twist support bar having an aperture that is engaged by the bridge **20** and positioned at the mid-way point of the bridge **20**.

To the rear end of the seat there is provided a brace bar **36**, having arms **37**, the arms being secured to the base **11** by screws. The bridge **38** of the brace bar is deformed into a modified V-shaped configuration and disposed inwardly toward the rear edge of the seat, the V-shaped portion of the bridge adapted to engage a portion of the trunk of a tree. The arms **37** carry straps **39** for engaging the circumference of a tree trunk **40**, to secure the seat to the tree. One of the arms **37** carries a bracket **41**, having a circular portion or collar **42**, a bridge **43**, and a flange **44** that is provided with a lock screw **45**. As shown in Figure 1, the bridge portion **43** is of an arcuate configuration and it is adapted to engage and clamp the handle of a fishing rod (not shown), and support same when the bracket **41** is fixedly secured by the lock screw **45** to the bridge **43**.

In Figure 6, a modified form of the invention is illustrated and in this showing the arms **37'** engage the semi-circular portion **46** of a bracket **47**, the flanges **48** of which are secured to the base **11** by screws **49** or by other suitable means. The arms **37'** are provided with bores **50**, and these bores are adapted to be aligned with companion bores **51** in the semi-circular portion **46** of bracket **47** when the brace bar **36** is moved inwardly or outwardly and secured by a screw **52** when in selected position.

In using the seat as shown in Figures 1 to 4 inclusive, the support frame **19**, half-twist bar **31** and support rod **29** are removed from folded position, the support rod **29** passed through the aperture **34** in the half-twist bar **31**. The ends **17** of legs **18** of the support frame **19** are inserted into sockets **16** of the cups **15** and the end **32** of the half-twist bar then secured to the base **11** by screws **33**. If desired, an additional support frame **55** may be used, this being indicated by dotted lines in Figure 2. In this set up of the seat, the seat may be used on ice for a fisherman, on the ground or in a boat, and on other surfaces. If the seat is to be used where there are trees, such as along a stream or in the woods, the set-up shown in Figures 1 to 4 could be used, with the exception that the straps **39** would be secured to the trunk of a tree.

The seat may be modified by leaving off the support frame **19** and half-twist bar **31**, and as shown in Figure 7, the end **30** of rod **29** is jammed into the trunk **40** of a tree and the straps **39** secured to the trunk **40**, a portion of the bridge **38** engaging a portion of the trunk **40** of a tree.

As shown in the modified form in Figure 5, the ends **17'** of legs **18'** may be connected to hinges **23**, thus providing a foldable support attached to the seat, and in using this modified form of the invention, the end of the half-twist bar **31** would be disconnected from the base **11** by removing screw **33**.

1. A portable sportsman's seat comprising a seat structure, a support frame having its ends inserted into bores in said seat, reinforcing and stabilizing means comprising a leg having one end connected to and freely movable on said support frame, the opposite end detachably secured to the base of said seat, reinforcing and support means comprising a leg having a sharpened end portion passing through the reinforcing and stabilizing means and having the end remote from said sharpened portion pivotally connected to said seat, a brace bar at one end of said seat, the ends of said brace bar connected to said

seat, and straps and a clamp carried by said brace bar, said straps adapted for engagement with a support.

2. A portable sportsman's seat comprising a seat structure, a support frame having its ends inserted into bores in said seat, reinforcing and stabiiizing means comprising a leg having one end connected to and freely movable on said support frame, the opposite end detachably secured to the base of said seat, reinforcing and support means comprising a leg having a sharpened end portion passing through the reinforcing and stabilizing means and having the end remote from said sharpened portion pivotally connected to said seat, a brace bar at one end of said seat having arms, means on said seat for receiving and locking the arms of said brace bar, and a clamp on said brace bar for locking engagement with a handle of a fishing pole.

References Cited in the file of this patent

UNITED STATES PATENTS

336,156	Pursell	Feb. 16, 1886
1,984,602	Snyder	Dec. 18, 1934
2,264,744	Dunnam	Dec. 2, 1941
2,394,203	Pruder	Feb. 5, 1946
2,476,244	Johnson	July 12, 1949