H. P. McCOLL.

DOOR LOCK AND CONTACT FOR ELECTRIC ELEVATORS.

APPLICATION FILED JAN. 4, 1915.

1,192,217. Patented July 25, 1916.

Fig. 1.

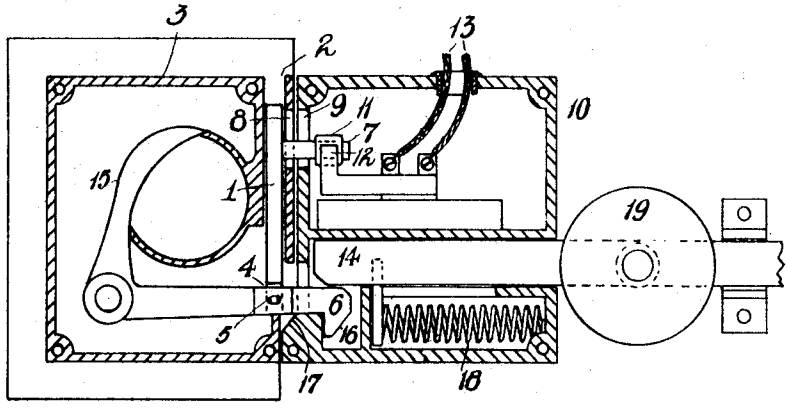

Fig. 2.

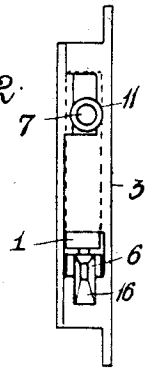

Fig. 3.

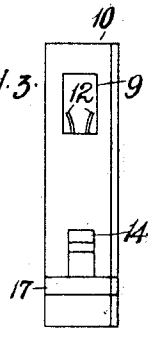

Witnesses:
B. Dommers
E. Leckert

Inventor.
Henry Percy McColl,
By Henry McColl atty

THE KORR-PETERS CO., PHOTO-LITHO., WASHINGTON, D. C.

UNITED STATES PATENT OFFICE.

HENRY PERCY McCOLL, OF MELBOURNE, VICTORIA, AUSTRALIA.

DOOR LOCK AND CONTACT FOR ELECTRIC ELEVATORS.

1,192,217. Specification of Letters Patent. Patented July 25, 1916.

Application filed January 4, 1915. Serial No. 367.

To all whom it may concern:

Be it known that I, HENRY PERCY McCOLL, a subject of the King of Great Britain, residing at 402 Post Office Place, Melbourne, in the State of Victoria, Commonwealth of Australia, electrical engineer, have invented certain new and useful Improvements in Door Locks and Contacts for Electric Elevators, of which the following is a specification.

This invention relates to combined door locks and contacts for electric elevators and the improvements have been devised for the purpose of producing a simplified and more reliable contrivance.

The drawings illustrating the invention comprise: Figure 1 a vertical section through the lock and Figs. 2 and 3 end views respectively of the portions of the lock on the door and frame of the opening in the well.

According to this invention a contact carrying bar 1 is mounted in a vertical guide 2 in the catch casing 3 on the door and is loosely pivoted or attached by a pin 5 in a slot 4 to the catch 6 of the lock. This bar 1 has an insulated arm 7 made for instance of fiber which projects laterally through an opening 8 in the casing 3 and when the door is closed extends through a slot 9 in the lock casing 10 in the frame of the opening in the well. Attached to the outer end of the arm 7 is a metal ferrule 11 which is adapted to make contact with a pair of contacts 12 in the electric circuit 13 controlling the elevator. When the elevator is at a landing and the usual locking bar 14 that controls the catch 6 is automatically withdrawn, by means for instance of a cam (not illustrated) on the elevator engaging the roller 19, the catch may be lifted by the handle 15. The lifting of the catch causes the contact-carrying bar 1 to be raised and with it the ferrule 11 clear of the contacts 12 so that the circuit 13 is opened, the door then being slid back carries with it the contact ferrule. Upon the door being pushed to close same the bevel nose 16 of the catch engages a bevel lip 17 on the catch slot of the casing 10 and raises the catch with the ferrule 11 clearly above the contacts 12 and when the door is quite closed the catch and the ferrule drop into the position illustrated when the elevator control circuit is closed. It will be observed that until the catch is in correct locking position the ferrule cannot close the circuit. Upon the elevator being started the locking bar 14 moves forward by the aid of a spring 18 (or another cam not illustrated on the elevator) and locks the catch as illustrated so that the door cannot be opened nor the circuit broken while the elevator is traveling between landings. The foregoing invention is applicable to horizontally or vertically sliding doors or swinging doors.

It will be observed by the foregoing that instead of the catch pressing a lever or other device adapted to make contact in the lock casing as is done in some instances, the contact making part is carried on the door and is positively removed from contact by the lifting of the catch and altogether withdrawn by opening the door. This construction eliminates the possibility of contact remaining made after the door is opened. The contact once made does not require any pressure on the catch to maintain it therefore no spring is necessary and there is no tendency for the contact to become loose while furthermore friction is reduced and the closing of the door is more reliable. It will be noticed moreover in contra distinction to plugs, wedges or similar contacts that the contact is not made until the catch is in the casing and down to locking position thus avoiding danger of the elevator running while any door is not securely locked.

I claim:—

1. A door latch and contact for controlling a control circuit of an elevator, comprising a lock casing, a catch on the elevator door, terminals for connection in said circuit arranged out of the longitudinal plane of movement of the catch, and a contact carried by the latch in the plane of and adapted to contact with the terminals when the catch drops into locking position.

2. A door lock and contact for controlling a control circuit of an elevator, comprising a lock casing, a catch on the elevator door, terminals for connection in said circuit, a vertically guided member carried by said catch, and a contact on said member adapted to engage said terminals.

3. A door lock and contact for controlling a control circuit of an elevator, comprising a lock casing, a catch on the elevator door, contacts for connection in said circuit, a contact pivotally connected with said catch to make contact in the frame portion of the

lock casing and adapted to be raised and positively removed from said contacts when the door is opened.

4. A door lock and contact for controlling a control circuit of an elevator, comprising a lock casing, a catch on the elevator door, contacts for connection in said circuit, a catch casing on the door, a vertically guided bar therein loosely connected with said catch, a laterally projecting contact on said bar adapted to engage said contacts in the control circuit.

5. A door lock and contact for controlling a control circuit of an elevator, comprising a lock casing, a catch on the elevator door, contacts for connection in said circuit, a catch casing on the door, a vertically guided bar therein loosely connected with said catch, a laterally projecting contact on said bar adapted to engage said contacts in the control circuit, and means to prevent said circuit being closed until the catch has dropped into locking position.

6. A door lock and contact for controlling a control circuit of an elevator, comprising a lock casing, a catch casing on the elevator door, a pivoted catch in the latter formed with a bevel nose, a slot in the lock casing formed with a bevel lip, a bar loosely connected to said catch and mounted in a vertical guide in said catch casing, an insulated arm on said bar projected through an opening formed in said catch casing, a contact ferrule on said arm, a slot in the lock casing through which said ferrule enters, and contacts for connection in said circuit adapted to be engaged by said ferrule.

7. A door lock and contact for controlling a control circuit of an elevator, comprising a lock casing, a catch casing on the elevator door, a pivoted catch in the latter formed with a bevel nose for engaging a slot in the lock casing, a bar loosely connected to said catch and mounted in a vertical guide in said catch casing, an insulated arm on said bar projected through an opening formed in said catch casing, a contact ferrule on said arm arranged to project through a slot in the lock casing, a pair of contacts for connection in said circuit adapted to be engaged by said ferrule, and an automatic locking bar to control said catch.

In testimony whereof I have hereunto set my hand in presence of two subscribing witnesses.

HENRY PERCY McCOLL.

Witnesses:
ARTHUR J. WATERS,
EDWARD WATERS.

Copies of this patent may be obtained for five cents each, by addressing the "Commissioner of Patents, Washington, D. C."