US 20050126087A1

(19) United States

(12) Patent Application Publication (10) Pub. No.: US 2005/0126087 A1

Monden et al. (43) Pub. Date: Jun. 16, 2005

(54) MANHOLE STRUCTURE, FLEXIBLE WATER SHUT OFF JOINT FOR MANHOLE STRUCTURE AND METHOD FOR INSTALLING MANHOLE STRUCTURE

(75) Inventors: **Fumio Monden**, Hiroshima (JP); **Hideichi Suzuki**, Hiroshima (JP); **Satoshi Suyama**, Hiroshima (JP)

Correspondence Address:
Oliff & Berridge
PO Box 19928
Alexandria, VA 22320 (US)

(73) Assignee: **HAYAKAWA RUBBER COMPANY LIMITED**, Hiroshima (JP)

(21) Appl. No.: **10/487,908**

(22) PCT Filed: **Jul. 16, 2002**

(86) PCT No.: **PCT/JP02/07227**

Publication Classification

(51) **Int. Cl.**[7] **E02D 1/00**

(52) **U.S. Cl.** **52/169.1**

(57) **ABSTRACT**

There is provided a manhole structure **1** formed by joining a cast-in-place concrete manhole wall **2** to a pipe **3.** In the manhole structure **1,** the pipe **3** is driven and laid in a vertical shaft **4,** and a flexible cut-off joint **5** for manhole is disposed on an outer periphery of the pipe **3.** The flexible cut-off joint **5** for manhole comprises a rigid cylindrical body **6** and a tubular flexible body **7** located at an inside of the cylindrical body **6** in a space between the cylindrical body and the pipe, and the tubular flexible body **7** is made of an elastic body. An end **7***a* of the tubular flexible body **7** is press-fixed to an inner surface of the cylindrical body **6** with an expansion band **8,** and the other end **7***b* of the tubular flexible body **7** is press-fixed to an outer periphery of the pipe **3** by tightening with a fastening band **9.** The manhole wall **2** is formed by pouring a concrete on the outer periphery of the cylindrical body **6.** The tubular flexible body **7** in the manhole structure **1** absorbs an expansion-contraction displacement, a bending displacement, a shearing displacement and the like between the manhole wall **2** and the pipe **3** without applying a load to the pipe **3.**

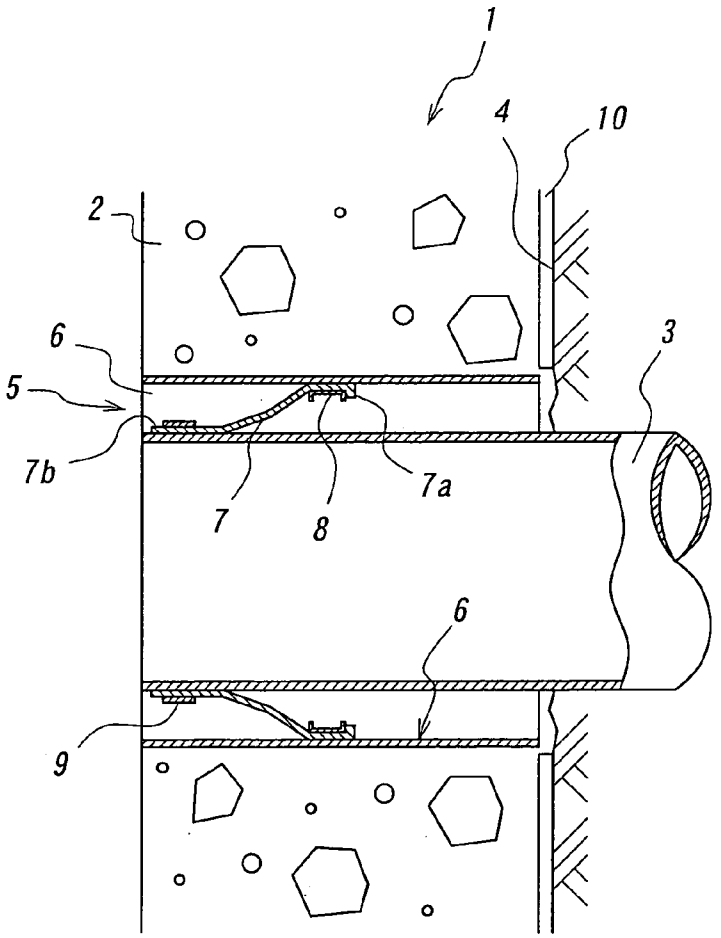

FIG. 1

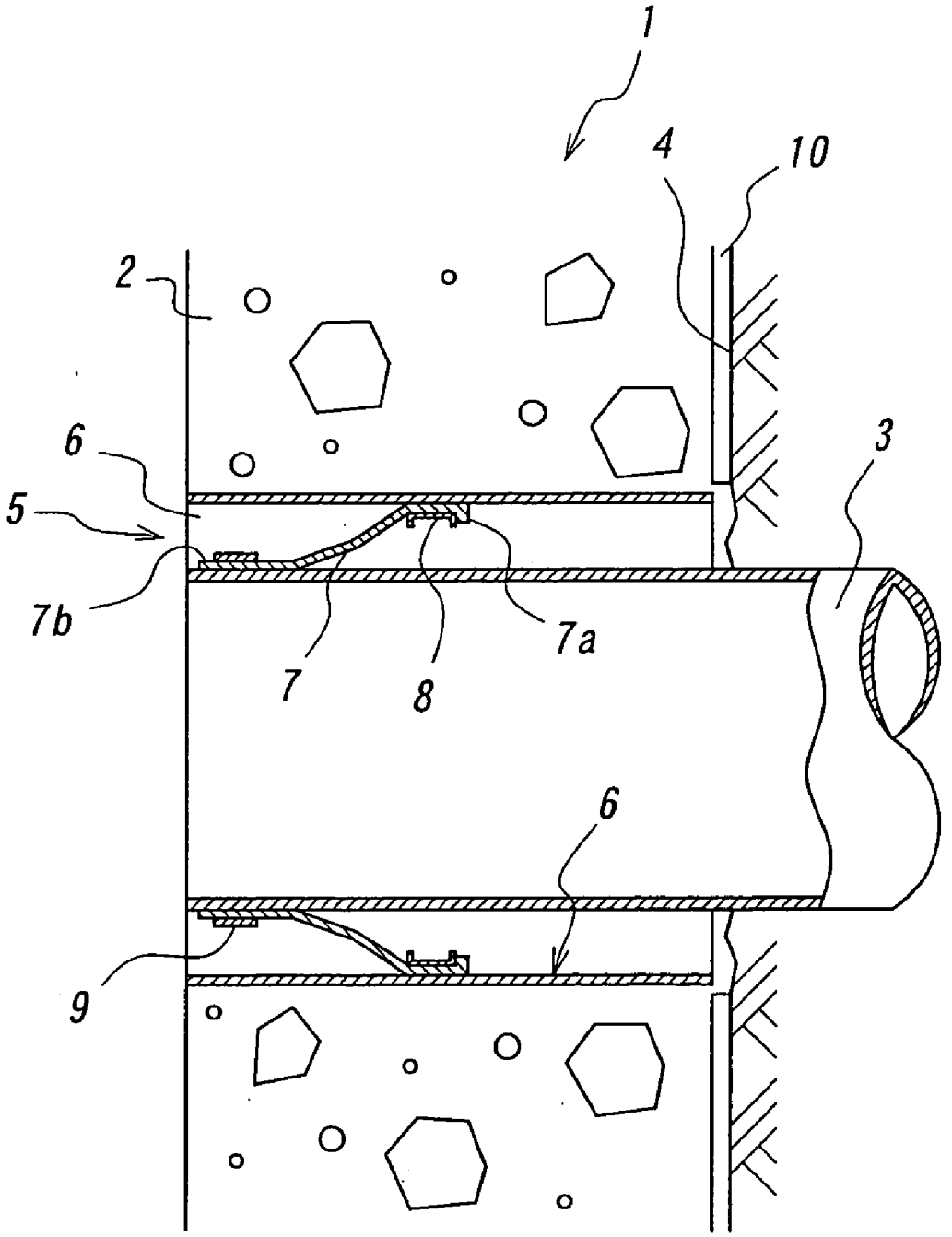

FIG. 2

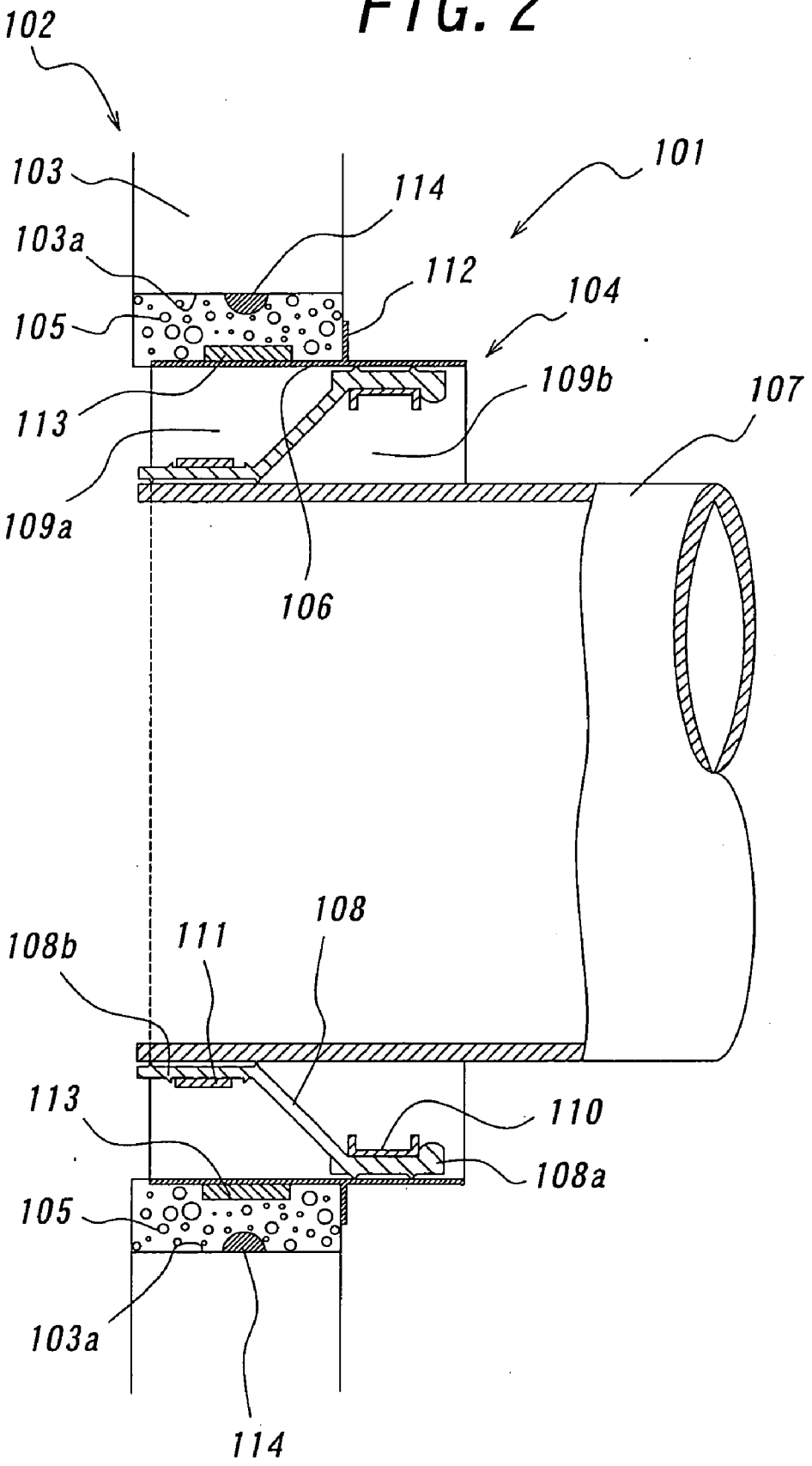
102
101
103
114
103a
112
104
105
109b
107
113
109a
106
108
108b
111
113
110
108a
105
103a
114

FIG. 3

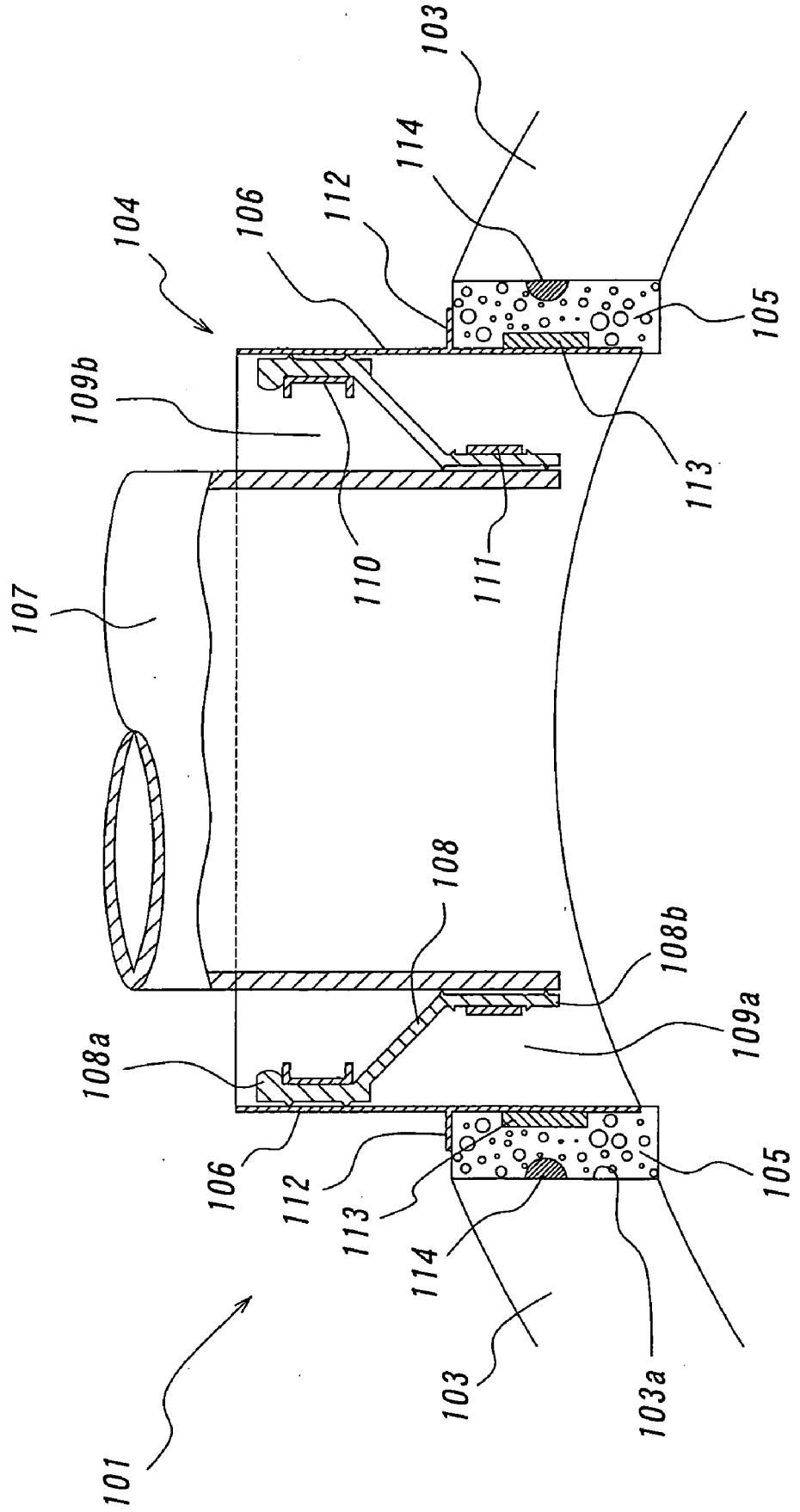
103
114
112
106
104
105
109b
113
110
111
107
108
108b
109a
108a
106
112
113
114
105
103
103a
101

FIG. 4

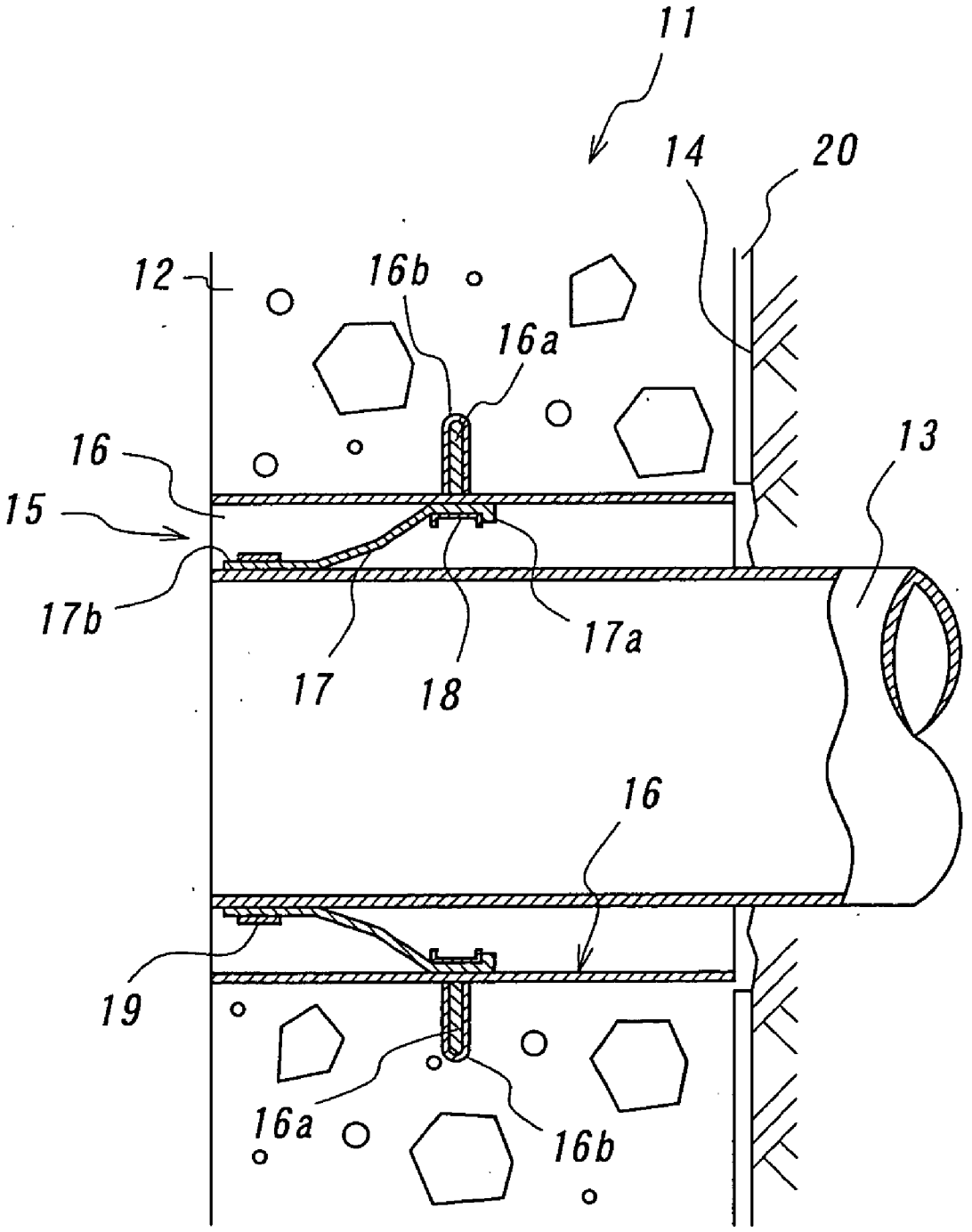

FIG. 5

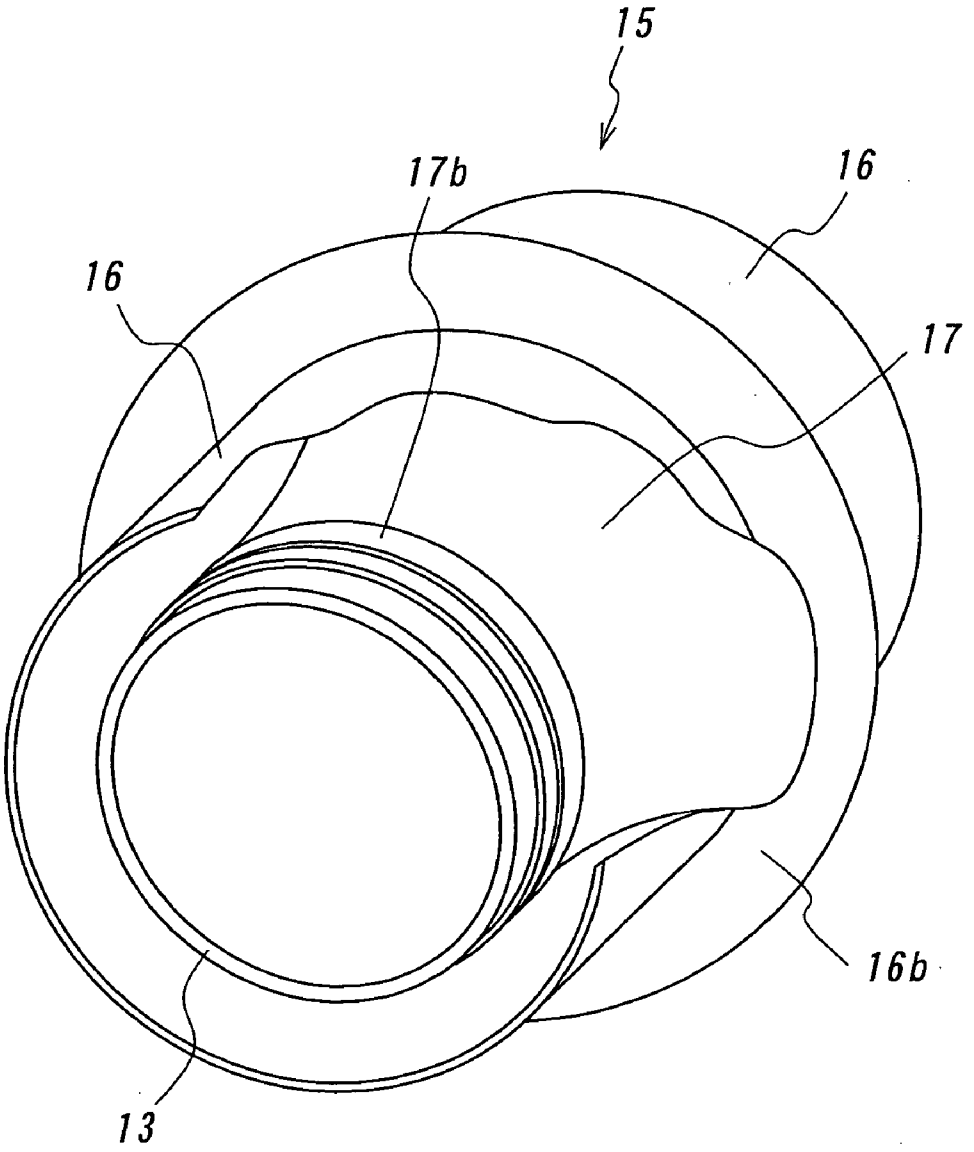

FIG. 6

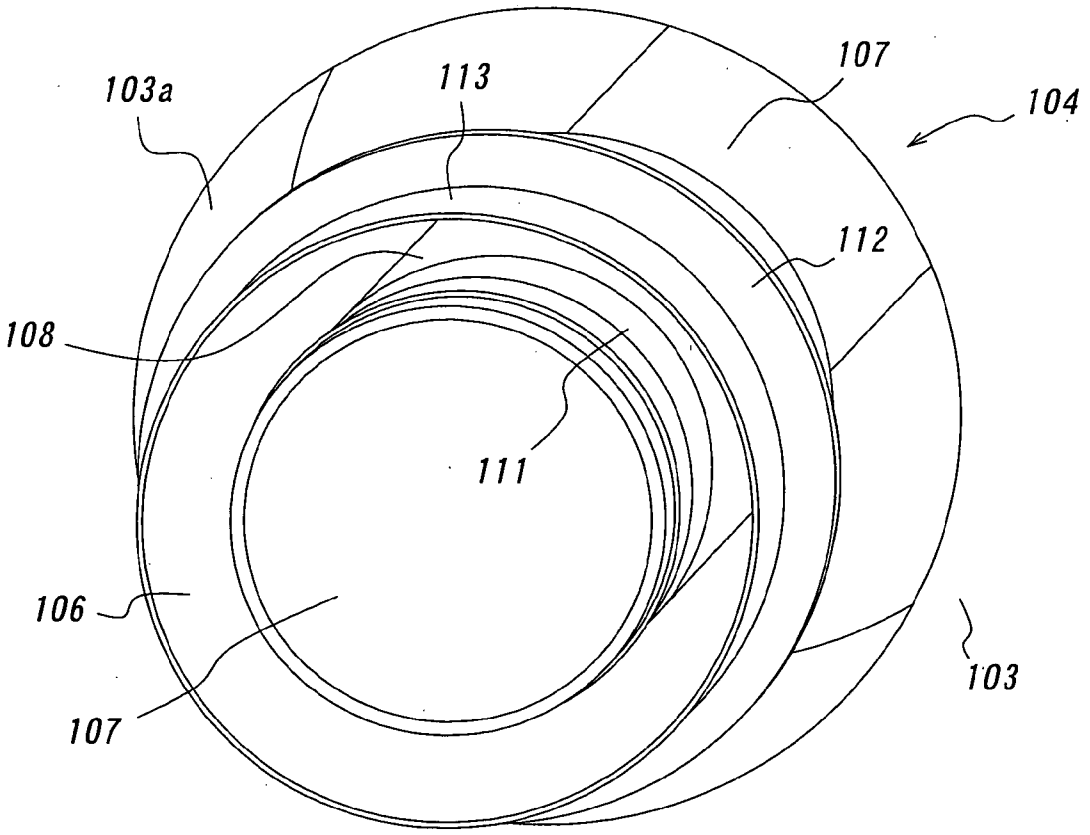

FIG. 7

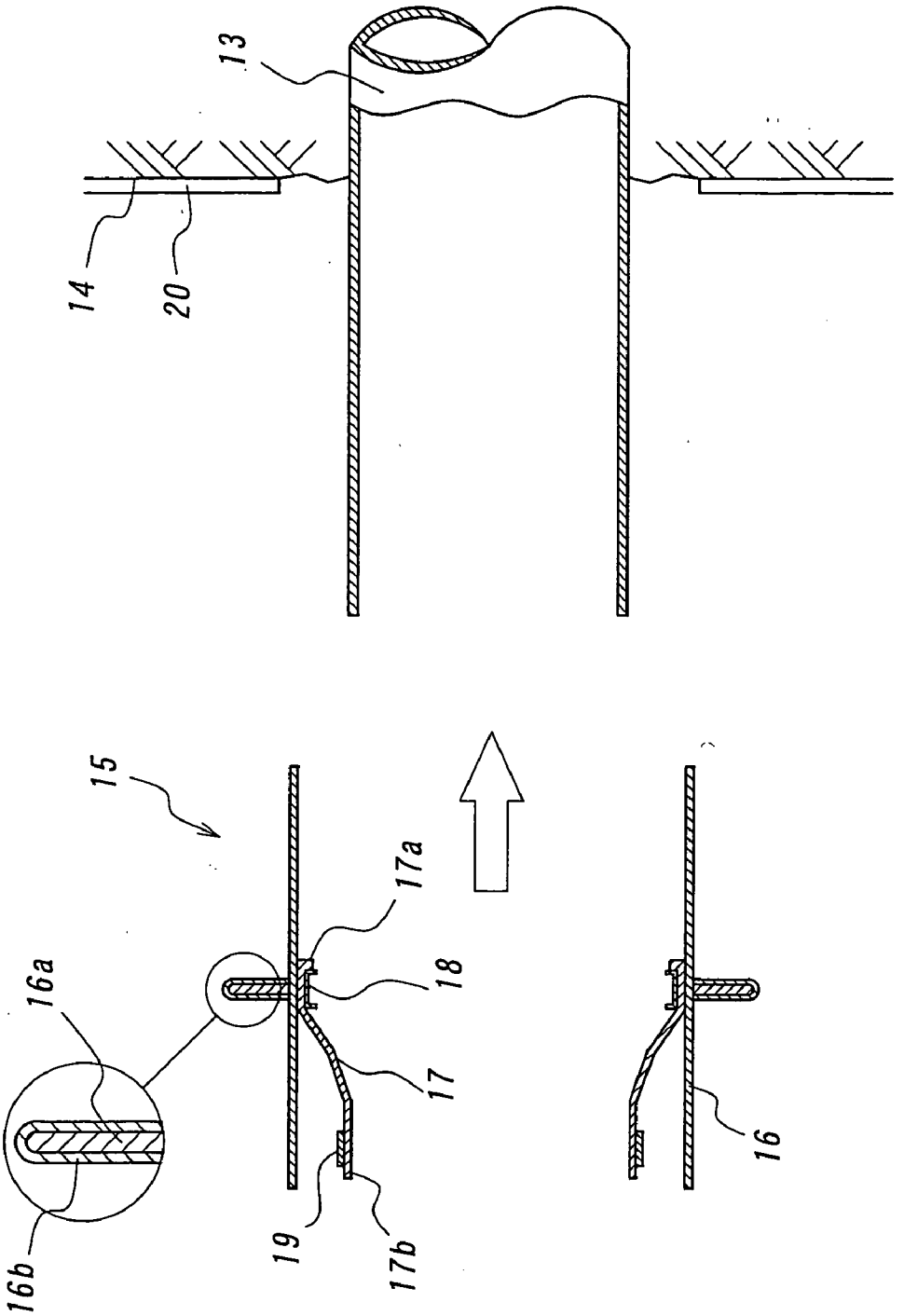

FIG. 8

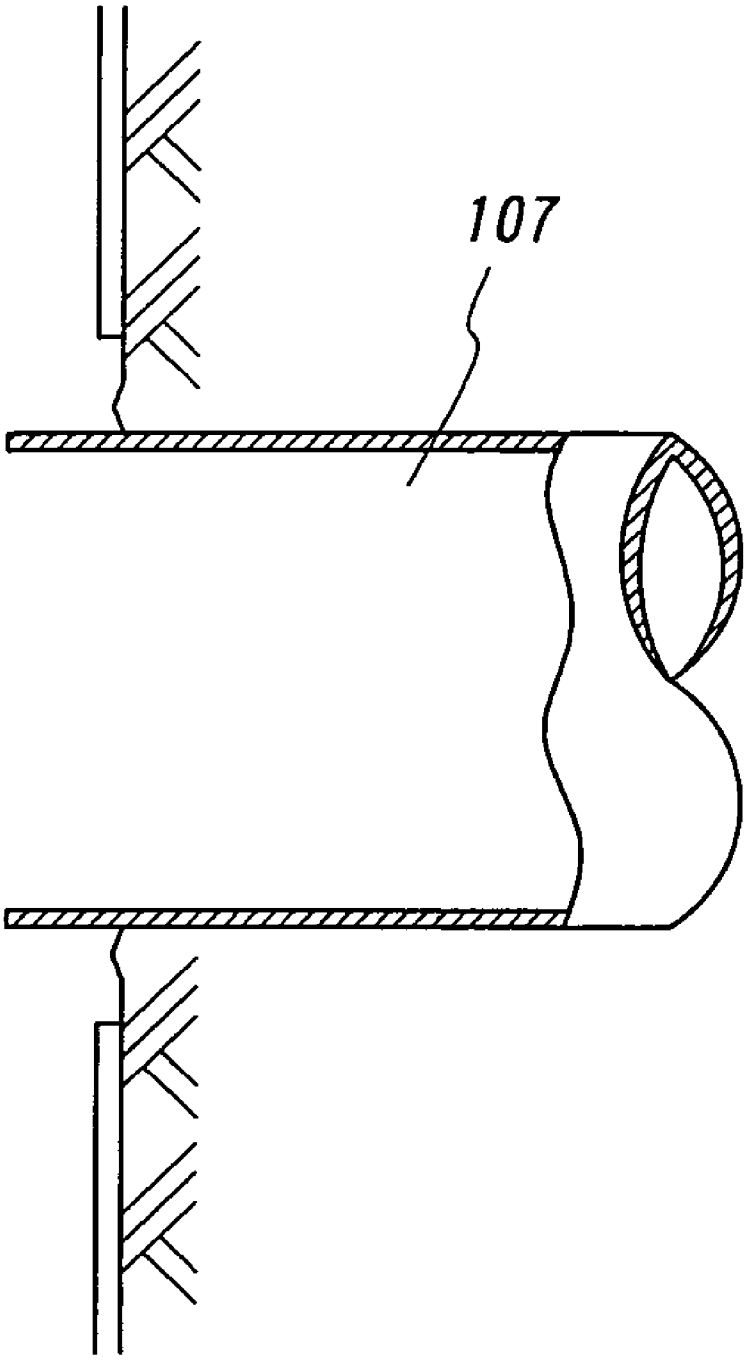

FIG. 9

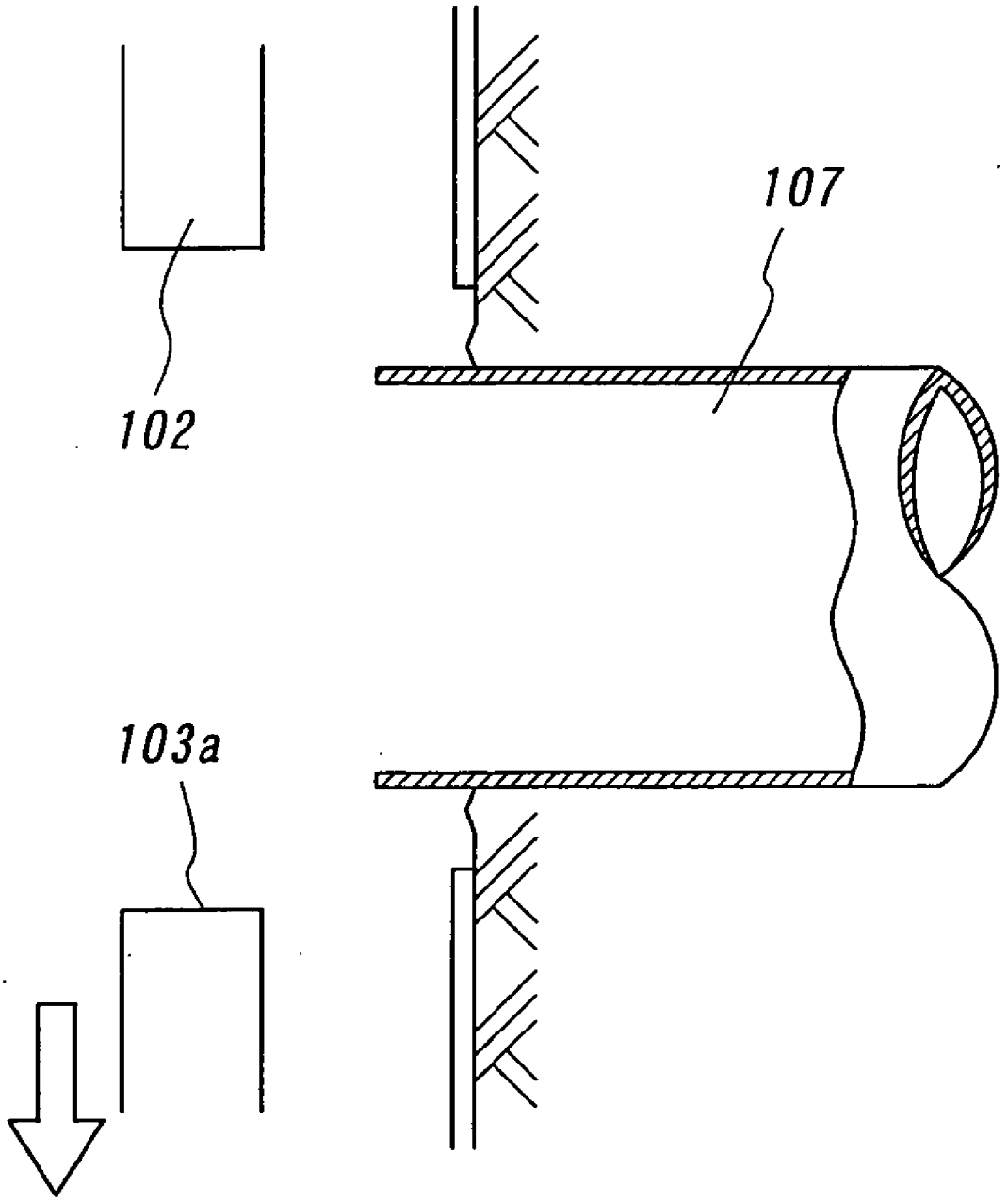

FIG. 10

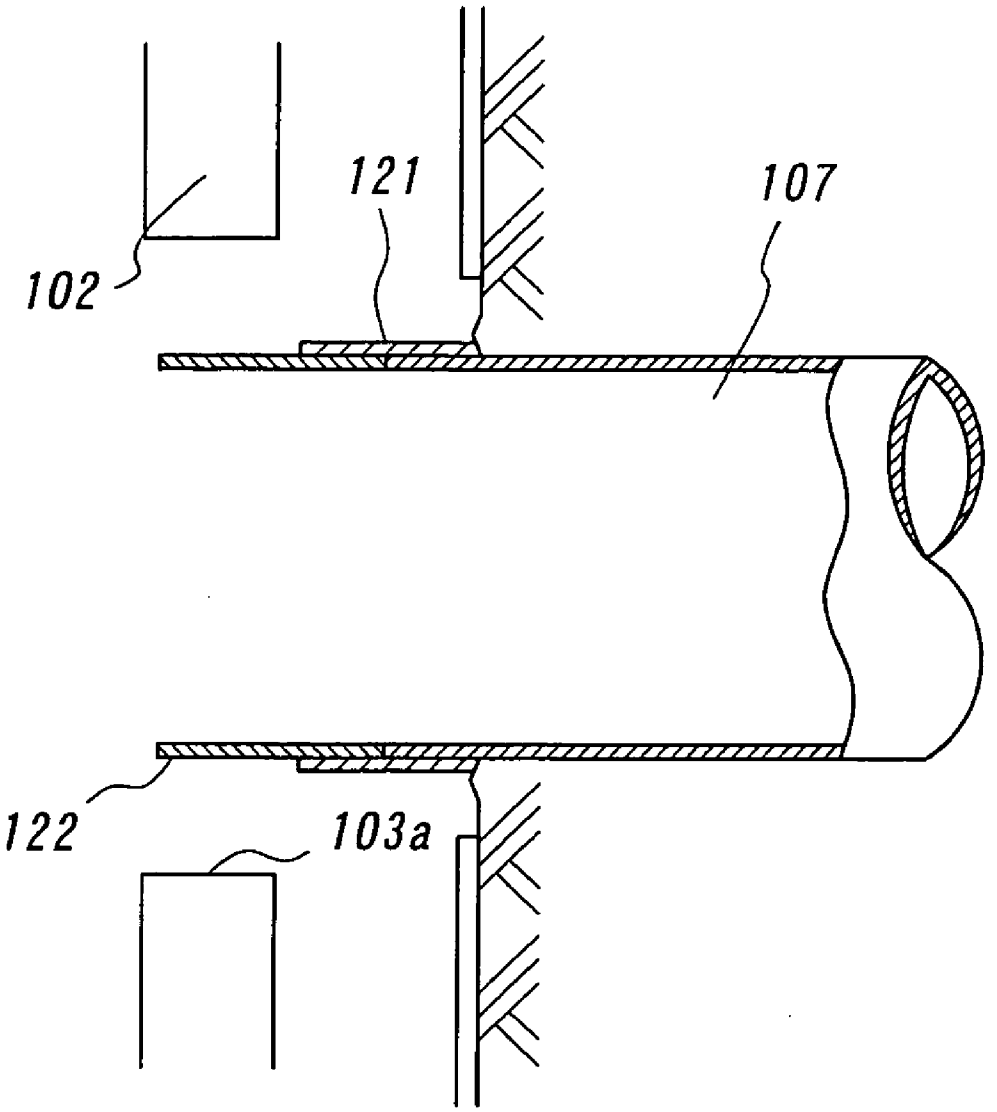

FIG. 11

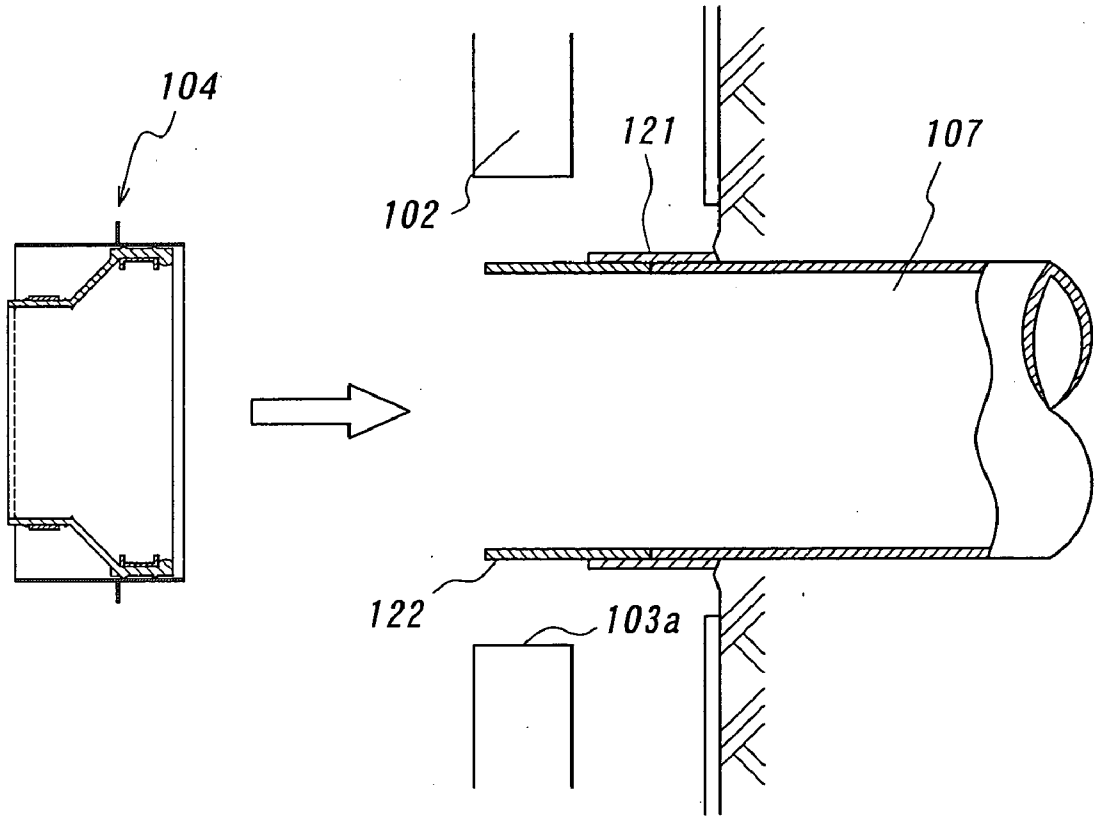

FIG. 12

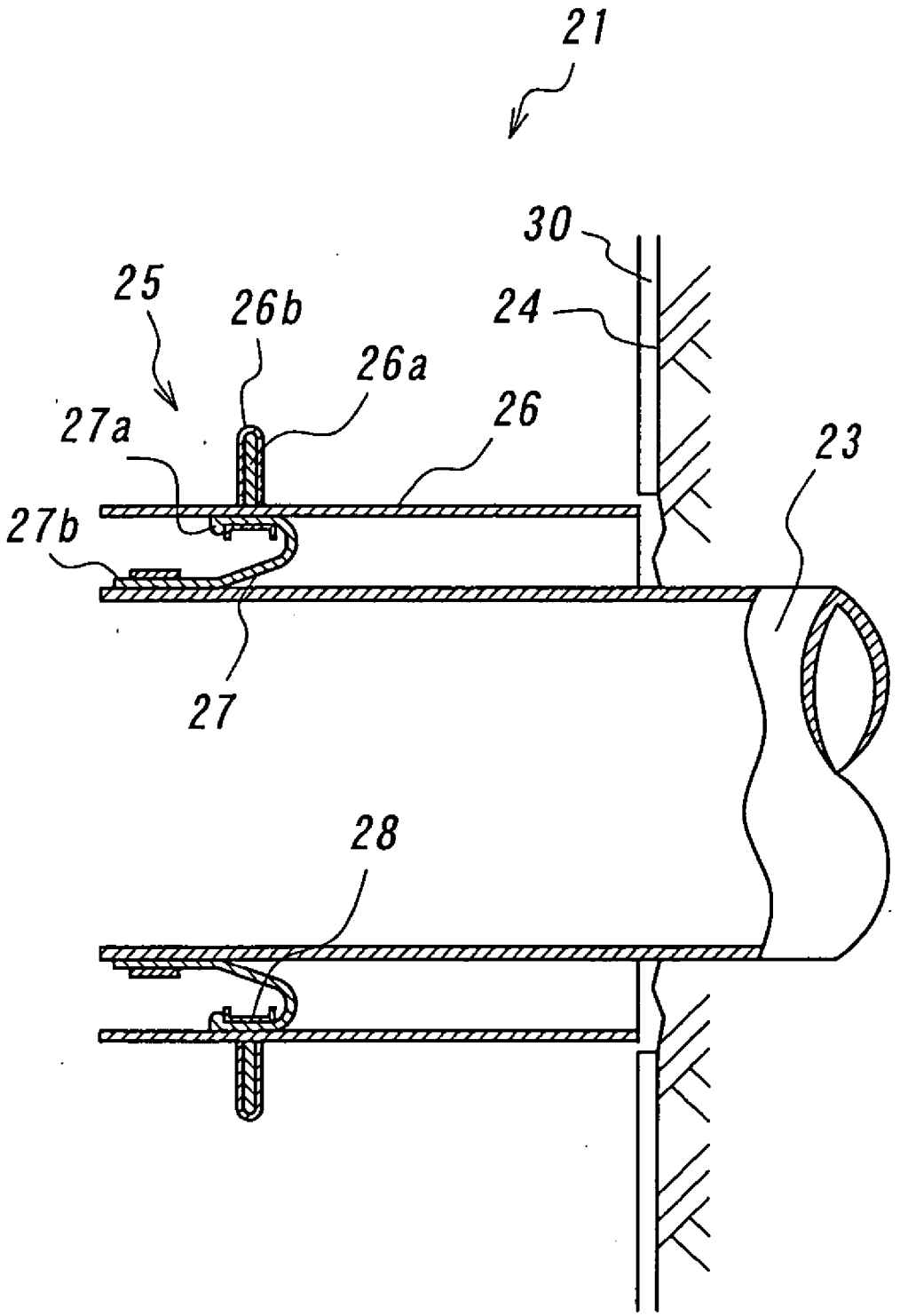

FIG. 13

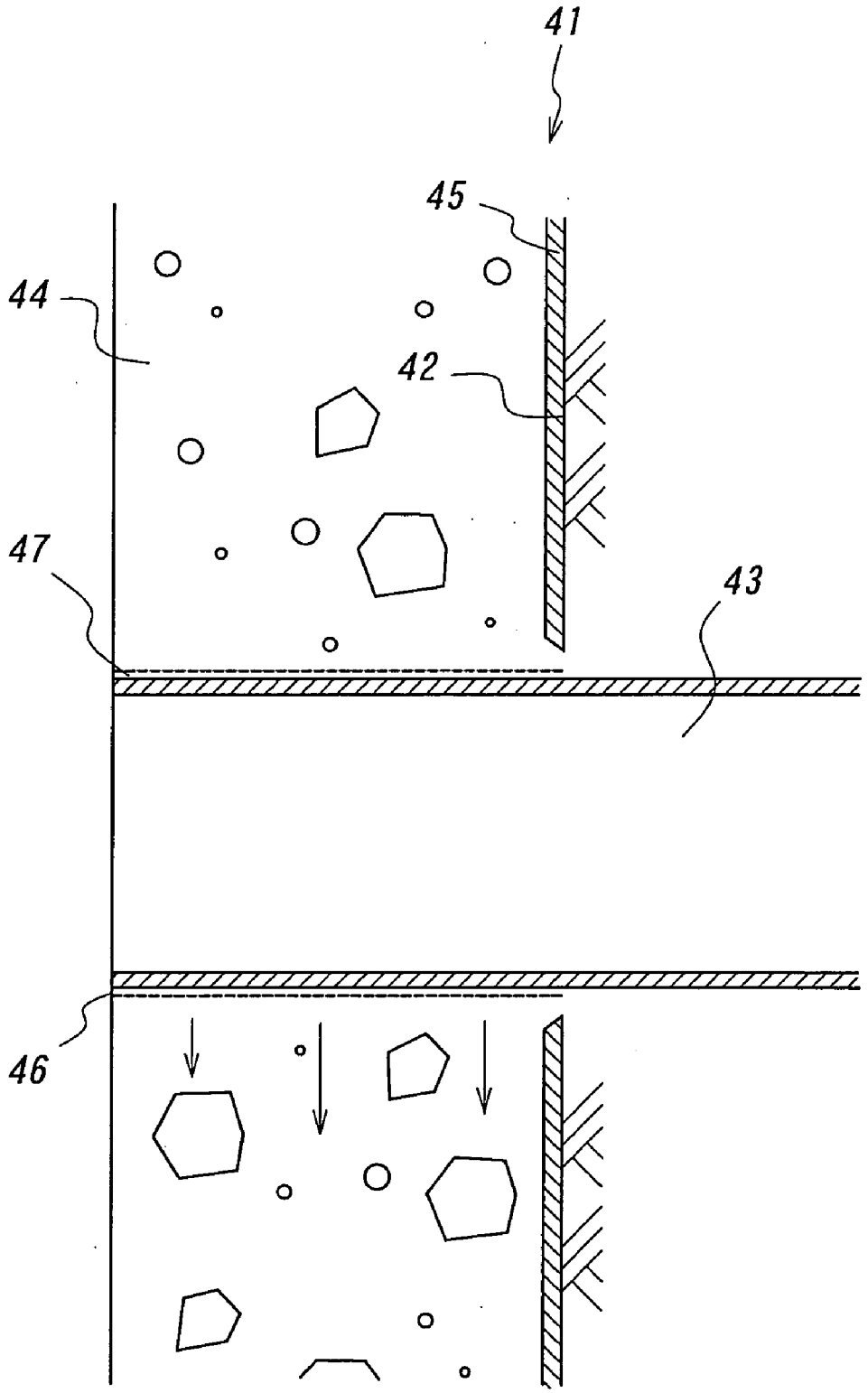

FIG. 14

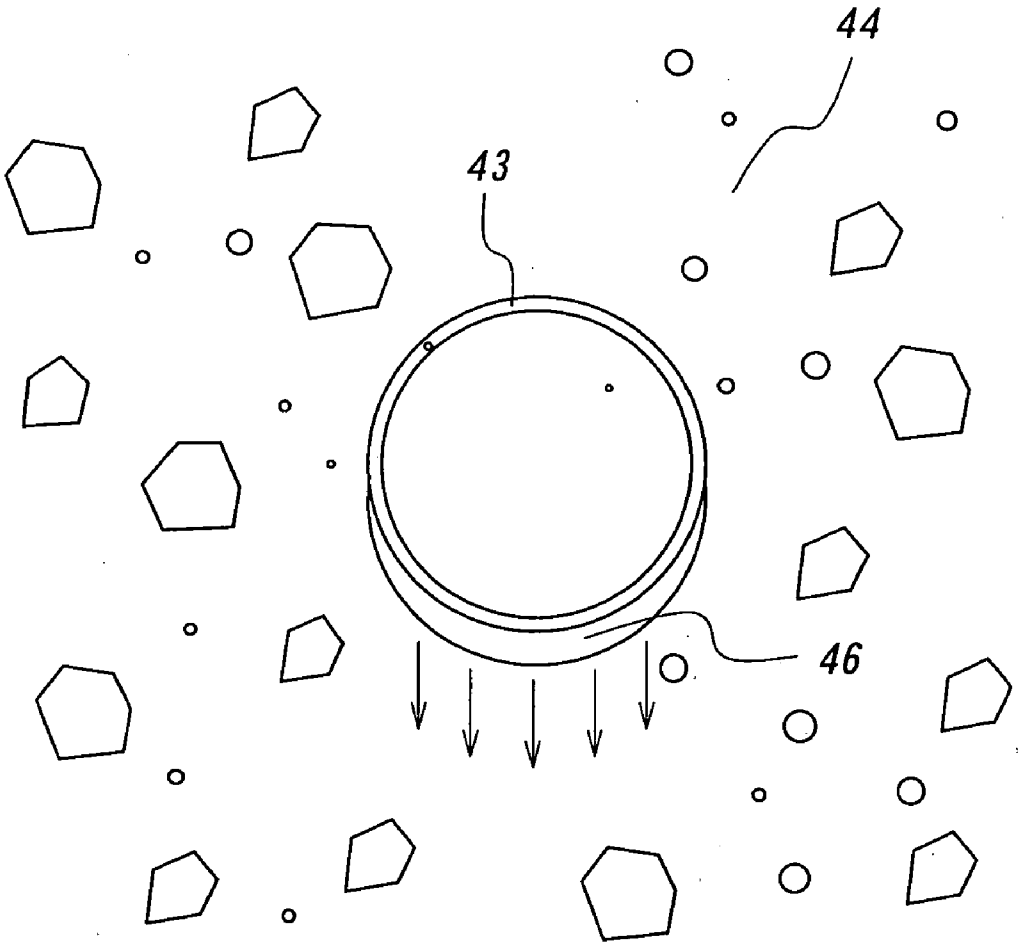

FIG. 15

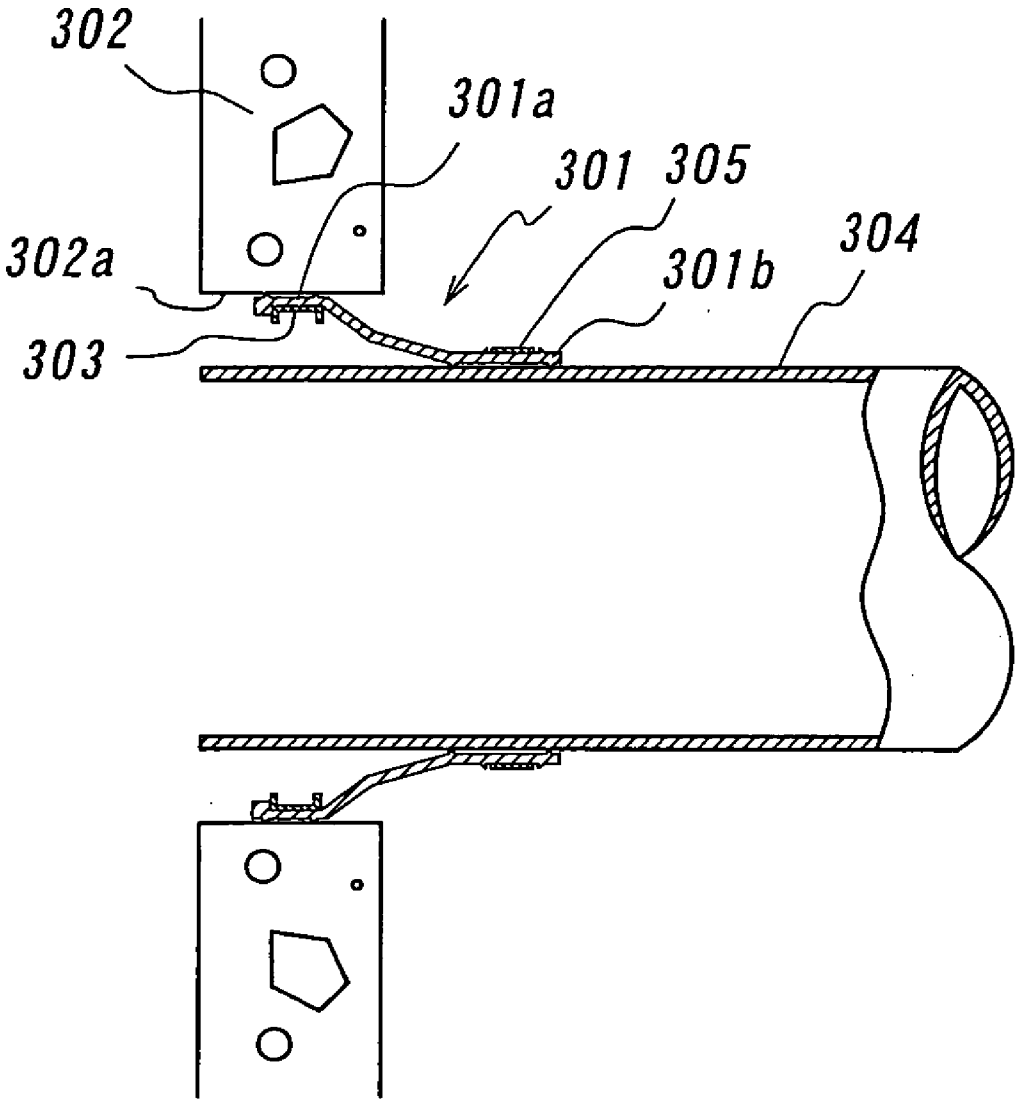

FIG. 16

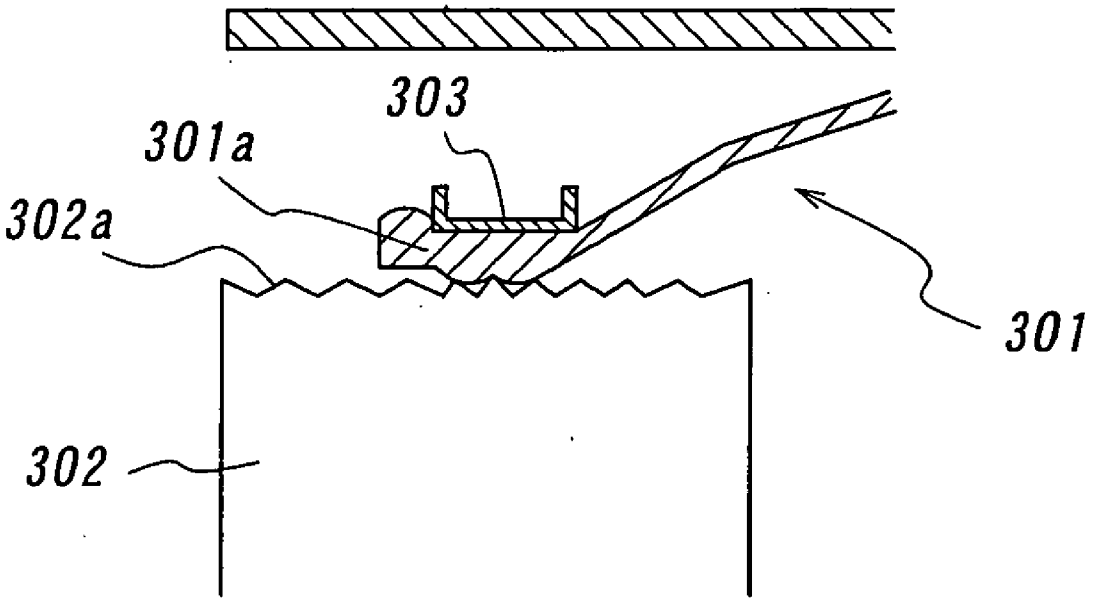

MANHOLE STRUCTURE, FLEXIBLE WATER SHUT OFF JOINT FOR MANHOLE STRUCTURE AND METHOD FOR INSTALLING MANHOLE STRUCTURE

FIELD OF THE INVENTION

[0001] This invention relates to a structure of a joining portion between a wall of a manhole wall and a pipe such as a sewerage pipe or the like, and a flexible cut-off joint for manhole used in such a joining portion, and more particularly to a flexible cut-off joint for manhole structure used in a concrete manhole structure constructed by a pipe jacking method.

BACKGROUND ART

[0002] There is known a manhole structure constructed by the pipe jacking method as shown in **FIG. 13**. In **FIG. 13** is shown a vertical cross-sectional view of the conventional manhole structure constructed by the pipe jacking method.

[0003] In the conventional manhole structure, as shown in **FIG. 13**, vertical shafts **42** are first dug in both of start and arrive by the pipe jacking method, and then a pipe **43** such as a sewerage pipe or the like is compressed into the vertical shaft **42** by a jack while with digging with a transverse boring machine.

[0004] In the conventional pipe jacking method, as shown in **FIG. 13**, a mold is subsequently built in the vertical shaft **42** laying the pipe **43** such as sewerage pipe or the like therein, and concrete is poured into the mold to form a manhole wall **44**, whereby the manhole structure is constructed.

[0005] In case of digging the vertical shaft, a steel pipe is usually used as an earth retaining wall for rendering the working area into a minimum range. In the formation of the manhole wall **44**, therefore, a casing steel pipe **45** forms an outer mold. The previously laid pipe **43** is embedded in the concrete of the manhole wall **44**.

[0006] **8** Problems to be Solved in the Invention]

[0007] In such a manhole structure **41**, however, the joining portion between the manhole wall **44** and the pipe **43** such as sewerage pipe or the like is rigid joining, so that the joining portion between the manhole wall **44** and the pipe **43** is broken due to uneven settlement of ground in earthquakes or the like.

[0008] It is an of the invention to prevent the breakage of the joining portion between the manhole wall and the pipe in the earthquake or the like by providing a manhole structure in which the joining between a cast-in-place concrete manhole wall and a pipe is rendered into flexible joining by a flexible cut-off joint for manhole.

[0009] It is another object of the invention to prevent the breakage of the joining portion between the manhole wall and the pipe in the earthquake or the like by providing a manhole structure in which the joining between the manhole and the pipe is rendered into flexible joining by a flexible cut-off joint for manhole structure.

[0010] Means for Solving Problems]

[0011] The invention concerns a manhole structure comprising a manhole and a pipe joined thereto, in which the pipe is driven and laid in a vertical shaft, and a flexible cut-off joint for manhole structure is disposed on an outer periphery of the pipe, and the flexible cut-off joint for manhole structure comprises a rigid cylindrical body and a tubular flexible body located in a space between the cylindrical body and the pipe and at an inside of the cylindrical body, and the tubular flexible body is made of an elastic body absorbing a displacement between the cylindrical body and the pipe, and at least a part of the tubular flexible body is fixed to the cylindrical body and the pipe, respectively, and the outer periphery of the cylindrical body is fixed with a filler for manhole wall. Also, the invention concerns a flexible cut-off joint for use in such a manhole structure and a method for construction of such a manhole structure.

[0012] The inventor has prepared and examined various manhole structures for rendering the joining portion between a cast-in-place concrete manhole wall and a pipe such as sewerage pipe or the like into flexible joining.

[0013] As a result, the inventor has found that by using a given flexible cut-off joint for manhole is obtained a manhole structure wherein the joining portion between a pipe laid by the pipe jacking method and the cast-in-place concrete manhole wall is rendered into the flexible joining, and the invention has been accomplished.

[0014] Moreover, the inventor has prepared and examined various manhole structures for rendering a joining portion between a ready-made build-up manhole and a pipe such as sewerage pipe or the like into a flexible joining.

[0015] Consequently, the inventor has found that by using a given flexible cut-off joint for manhole is obtained a manhole structure wherein the joining portion between a laid by the pipe jacking method and a manhole, and the invention has been accomplished.

[0016] The flexible cut-off joint for manhole according to the invention comprises a rigid cylindrical body and a tubular flexible body located at the inside of the cylindrical body, in which the tubular flexible body is made of an elastic body.

[0017] The tubular flexible body according to the invention connects between the rigid cylindrical body and the pipe and acts to absorb a displacement therebetween. The tubular flexible body is formed so as to expand radially in a direction from the inside of manhole to the outside thereof, whereby a fixing portion can be fixed to an outer periphery of the pipe from the inside of the manhole.

[0018] The joint according to the invention is a flexible cut-off joint for manhole applied on the joining portion between the pipe and the manhole wall of the manhole such as a cast-in-place concrete manhole, a build-up manhole or the like.

[0019] The cylindrical body according to the invention serves as a dam to ensue a space between the cylindrical body and the pipe when the manhole wall is formed by pouring a filler for manhole wall such as a concrete or the like on the outer periphery of the cylindrical body.

[0020] Also, the cylindrical body according to the invention serves as a dam on a filler for manhole wall between a drilled surface of the manhole wall and a flexible cut-off joint for manhole structure to ensue a space between the cylindrical body and the pipe when the filler for the manhole

wall such as mortar concrete or the like is poured on the outer periphery of the cylindrical body.

[0021] In the invention, the tubular flexible body made of an elastic body is arranged in the space between the cylindrical body and the pipe. Such a tubular flexible body serves to absorb a displacement between the cylindrical body and the pipe.

[0022] According to the manhole structure of the invention, the manhole wall is formed on the outer periphery of the cylindrical body and the cylindrical body and the pipe are connected through the tubular flexible body made of the elastic body, so that even if different load is applied between the manhole and the pipe or a relatively different displacement is produced there between to cause a position displacement by large-scale diastrophism such as earthquake or the like, the tubular flexible body can absorb such load and displacement to prevent the breakage of the joining portion between the manhole wall and the pipe.

[0023] Moreover, according to the manhole structure of the invention, the outer periphery of the cylindrical body is fixed to the manhole wall through the filler for manhole wall embedding a space between the manhole wall and the pipe, and the cylindrical body and the pipe are connected through the tubular flexible body made of the elastic body, so that even if different load is applied between the manhole and the pipe or a relatively different displacement is produced there between to cause a position displacement by large-scale diastrophism such as earthquake or the like, the tubular flexible body can absorb such load and displacement to prevent the breakage of the joining portion between the manhole and the pipe.

BRIEF DESCRIPTION OF THE DRAWINGS

[0024] **FIG. 1** is a vertical cross-sectional view of an embodiment of the manhole structure according to the invention.

[0025] **FIG. 2** is a vertical cross-sectional view of another embodiment of the manhole structure according to the invention.

[0026] **FIG. 3** is a transverse sectional view of the manhole structure of **FIG. 2**.

[0027] **FIG. 4** is a vertical cross-sectional view of the other embodiment of the manhole structure according to the invention.

[0028] **FIG. 5** is a perspective view of a flexible cut-off joint for manhole used in the manhole structure of **FIG. 4**.

[0029] **FIG. 6** is a perspective view of another embodiment of the flexible cut-off joint for manhole structure according to the invention.

[0030] **FIG. 7** is a vertical cross-sectional view of an embodiment of the method for constructing the manhole structure of **FIG. 4**.

[0031] **FIG. 8** is a vertical cross-sectional view illustrating a step of an embodiment of constructing the manhole structure according to the invention.

[0032] **FIG. 9** is a vertical cross-sectional view illustrating another step of the embodiment of constructing the manhole structure according to the invention.

[0033] **FIG. 10** is a vertical cross-sectional view illustrating the other step of the embodiment of constructing the manhole structure according to the invention.

[0034] **FIG. 11** is a vertical cross-sectional view illustrating a further step of the embodiment of constructing the manhole structure according to the invention.

[0035] **FIG. 12** is a vertical cross-sectional view of further embodiment of the manhole structure according to the invention.

[0036] **FIG. 13** is a vertical cross-sectional view of the conventional manhole structure constructed by the pipe jacking method.

[0037] **FIG. 14** is a front view of the conventional manhole structure as viewed from the inside of vertical shaft.

[0038] **FIG. 15** is a vertical cross-sectional view of the conventional embodiment using a flexible cut-off joint.

[0039] **FIG. 16** is a partially enlarged view of **FIG. 15**.

DETAILED DESCRIPTION OF THE INVENTION

[0040] An embodiment of the invention is explained below.

[0041] In the manhole structure according to the invention can be used manholes previously manufactured in a factory or the like such as a ready-made build-up manhole and the like in addition to cast-in-place concrete manholes. A drilled hole of the manhole wall surface for connecting to a pipe may be formed in building site, but is preferable to be formed in a completely quality controlled place such as a factory or the like.

[0042] The manhole structure according to the invention can be formed by jointing a cast-in-place concrete manhole wall and a pipe.

[0043] The cast-in-place concrete manhole wall according to the invention can be formed by pouring a filler for manhole wall into a mold in a building site such as vertical shaft or the like. Moreover, the pipe according to the invention is a pipe connecting such a manhole to another manhole or the like, which typically includes a sewerage pipe and the like.

[0044] In the invention, such a pipe is driven and laid between at least two vertical shafts by pipe jacking method, and thereafter a filler for manhole wall can be poured into the mold in the vertical shaft to form a manhole wall around such a pipe.

[0045] Such a filler for manhole wall is used for constructing the cast-in-place manhole wall or fixing a flexible cut-off joint for manhole structure onto a surface of the drilled hole of manhole wall such as a ready-made built-in manhole or the like, which can use various materials such as concrete, mortar concrete and the like.

[0046] Moreover, in the invention, the pipe is driven and laid between at least two vertical shafts by the pipe jacking method, and thereafter ready-made concrete members are assembled in the vertical shafts, and a flexible cut-off joint for manhole structure can be fixed onto a drilled hole surface formed in the assembled manhole wall with a filler for manhole wall.

[0047] The filler for manhole wall poured between the outer periphery of a cylindrical body according to the invention and the drilled hole surface of the assembled manhole wall is not particularly limited and may be various concretes such as a mortar concrete and the like. Especially, if a gap between the outer periphery of the cylindrical body and the drilled hole surface of the manhole is narrow, a shrinkage compensating mortar, a resin mortar, an epoxy resin or the like can be preferably used.

[0048] In case of the cast-in-place concrete manhole, the flexible cut-off joint for manhole structure according to the invention can be mounted on the pipe laid by the pipe jacking method prior to the formation of the manhole wall. Such a flexible cut-off joint for manhole comprises a rigid cylindrical body and a tubular flexible body located at an inside of the cylindrical body, in which the tubular flexible body is made of an elastic body.

[0049] Also, in case of the ready-made built-in concrete manhole, the flexible cut-off joint for manhole structure according to the invention can be mounted on the pipe laid by the pipe jacking method after the formation of the manhole wall. In this case, after the pipe laid by the pipe jacking method is extended up to the inner surface of the manhole, the flexible cut-off joint for manhole structure can be inserted between the drilled hole of the manhole wall and the extended pipe.

[0050] The tubular flexible body according to the invention is not particularly limited in the shape unless it is an elastic body absorbing a displacement between the cylindrical body and the pipe, and various shapes can be used.

[0051] As such a tubular flexible body can be used, for example, a cylindrical body. The wall of the tubular flexible body may be a polygonal shape such as quadrilaterals, pentagon, hexagon or the like, a bellows, a spring and the like as viewed from a vertical cross-section thereof.

[0052] The tubular flexible body can be inserted and arranged between the rigid cylindrical body and the pipe. The tubular flexible body is existent in a space between the cylindrical body and the pipe and is positioned at the inside of the cylindrical body. As shown in the figure, the connecting portion is positioned in the inside of the cylindrical body in a radial direction and in the inside of the both end portions of the cylindrical body in an axial direction. Moreover, in case of the pipe jacking method, as shown in the figure, the tubular flexible body is extended in a direction capable of fixing a holding portion to the pipe from the inside of the manhole.

[0053] In the invention, at least a part of the tubular flexible body is fixed to the cylindrical body and the pipe. In this way, a distance between the manhole wall and the pipe is kept at a constant level, while even if a different displacement is produced between the manhole wall and the pipe to cause the position shifting, the tubular flexible body can absorb efficiently the displacement to prevent the breakage of the joining portion.

[0054] In the flexible cut-off joint for manhole according to the invention, it is preferable that an end of the tubular flexible body is previously press-fixed to the inner surface of the cylindrical body through an expansion band.

[0055] Also, it is preferable that after the mounting on the pipe at this state, the other end of the tubular flexible body is tightened and press-fixed to the outer periphery of the pipe through a fastening band.

[0056] In the invention, the manhole wall can be formed by pouring a filler for manhole wall such as a concrete or the like into the outer periphery of the flexible cut-off joint for manhole mounted on the pipe.

[0057] Also, according to the invention, the filler for manhole wall is poured into the outer periphery of the cylindrical body in the flexible cut-off joint for manhole mounted on the pipe, whereby a gap between the drilled hole surface of the previously formed manhole wall and the cylindrical body can be filled up.

[0058] In the thus obtained manhole structure, the flexible cut-off joint for manhole is arranged in the joint portion between the manhole wall and the pipe, so that the tubular flexible body in the flexible cut-off joint for manhole render the joint portion between the manhole wall and the pipe into flexible joining.

[0059] The tubular flexible body according to the invention is made of an elastic body. Such an elastic body is required to have a flexibility capable of absorbing the displacement between the manhole wall and the pipe, but may be made by using various materials without being particularly limited.

[0060] Among the materials for the elastic body, rubber is especially preferable. Because the rubber has an elasticity in the material itself and is expandable and is suitable for developing a follow-up property against a pipe displacement.

[0061] The cylindrical body according to the invention may be a dam on the pouring filler for cast-in-place manhole wall, and ensures a space for the tubular flexible body between the cylindrical body and the pipe. For this end, the cylindrical body is preferable to be hardly deformed by a pressure of a placing concrete or the like.

[0062] In the invention can be used the cylindrical body made of the same material as the pipe. However, in the conventional manhole structure **41** shown in **FIG. 13**, a boundary face between the pipe **43** such as sewerage pipe or the like and the manhole wall **44** is easy to form a water channel for water leakage.

[0063] **FIG. 14** is a front view of the conventional manhole structure as viewed from the inside of the vertical shaft. As shown in **FIGS. 13 and 14**, in the conventional manhole structure **41**, the boundary face between the pipe **43** such as sewerage pipe or the like and the manhole wall **44** is easy to form the water channel for water leakage with an interstice produced in a lower portion of the cylindrical body by the dewatering settlement before the hardening of the concrete, a fine interstice **47** produced by the drying shrinkage of the concrete after aging and the like.

[0064] Therefore, when a short length pipe made of the same material as the pipe is used in the cylindrical body according to the invention, there can be used a sanded short length pipe in which sand are pasted onto an outer peripheral face of the pipe for improving the adhesion of the filler for manhole wall to a face of the cylindrical body contacting with the filler for manhole wall made of concrete or the like.

[0065] In the cylindrical body according to the invention, an adhesive materials or self-adhering material adhering to the filler for manhole wall made of concrete or the like can be attached to a face of the cylindrical body contacting with the filler for manhole wall constituting the manhole wall.

[0066] As such an adhesive material or self-adhering material can be used a water-expansible rubber based adhesive material or non-curing butyl rubber based self-adhering material.

[0067] Moreover, the non-curing butyl rubber based self-adhering material is preferable as the adhesive material or self-adhering material. The water-expansible rubber based adhesive material is expanded by absorbing an incoming water to stop water through the expansion pressure. While, the butyl rubber based self-adhering material adheres chemically to the filler for manhole wall in the course of curing the filler for manhole wall and is high in the water-stop ability.

[0068] The adhesive material or self-adhering material can prevent the occurrence of water leakage from the interstice produced in the lower portion of the cylindrical body by the dewatering settlement before the hardening of the filler for manhole wall, the fine interstice produced by the dry shrinkage of the filler for manhole wall after aging and the like.

[0069] A flange can be arranged on the outer periphery of the cylindrical body according to the invention. This flange serves to fix the cylindrical body to the concrete or the like of the manhole wall by digging into the filler for manhole wall, and can enhance the adhesion property between the cylindrical body and the filler for manhole wall.

[0070] The material or the like for the flange is not particularly limited unless it digs into the filler for manhole wall in the manhole wall and is fixed to the filler for manhole wall. It is preferable that the flange is hardly deformed by a pressure of a placing filler for manhole wall.

[0071] Also, an adhesive materials or self-adhering material adhering to the filler for manhole wall made of concrete or the like can be attached to a face of the flange according to the invention contacting with the filler for manhole wall in the manhole wall likewise the aforementioned face of the cylindrical body contacting with the filler for manhole wall.

[0072] As the adhesive material or self-adhering material can be used the aforementioned water expansible rubber based adhesive material or non-curing butyl rubber based self-adhering material, and the non-curing butyl rubber based self-adhering material is preferable.

[0073] According to the flexible cut-off joint for manhole comprising the cylindrical body provided with the above flange and the adhesive material or self-adhering material applied to the outer face thereof, the flange attached with the adhesive material or self-adhering material on the outer periphery of the cylindrical body is embedded in the filler for manhole wall in the manhole wall, whereby an incoming water between the manhole wall and the cylindrical body can be blocked and the water leakage from the boundary face to the filler for manhole wall can be completely prevented.

[0074] Moreover, as a flexible cut-off joint for manhole is known one described in JP-A-9-32020. **FIG. 15** is a vertical cross-sectional view of an example using such a flexible cut-off joint. In this flexible cut-off joint **301**, an end **301***a* of a rubber flexible joint **301** is press-fixed to a drilled hole face **302***a* of a manhole **302** with an expansion band **303** to cover an outer periphery of a sewerage pipe **304**. The other end part **301***b* of the rubber flexible joint **301** is tightened with a fastening band **305** and press-fixed to a pipe **304**, whereby the joining portion between the manhole **302** and the sewerage pipe **304** is rendered into a flexible structure but also the water-stop ability is ensured.

[0075] Such a flexible cut-off joint for manhole should be fitted to the manhole prior to the joining of the pipe.

[0076] When the manhole is manufactured in a factory, a hole to be inserted with a pipe such as sewerage pipe or the like is formed in a specified position of the manhole by means of a concrete drilling machine. Although the rubber flexible portion is press-fixed to the drilled hole face with the expansion band, the drilled hole face is not necessarily flat and smooth.

[0077] A diamond is embedded in a blade edge of the concrete drilling machine, which cuts both of mortar and aggregate. However, an irregularity of about 2-3 mm is produced by the vibration of the drilling machine, and especially, the irregularity becomes larger as the cutting speed is increased. Also, some bubbles are included in the concrete itself, which may also cause the irregularity. As shown in **FIG. 16**, which is a partially enlarged view of **FIG. 15**, such an irregularity of the drilled hole face is easy to cause the water leakage between the drilled hole face **302***a* and the end **301***a* of the flexible joint **301**.

[0078] Therefore, the rubber flexible portion should be a rubber having a certain hardness and being not creped because it is press-fixed to the drilled hole face of the manhole with the expansion band to stop water and is required to absorb a displacement while outstanding water pressure.

[0079] However, such a rubber material may cause the water leakage because it can not follow the irregularity of the drilled hole face in the manhole only by the expansive force of the expansion band.

[0080] Also, as the drilling number increases, the blade edge wears and hence the size of the drilled hole decreases by 2-3 mm. As a result, the pressing can not be attained with the given expansion band.

[0081] In order to solve the above-mentioned defects, it is required to attach the flexible cut-off joint in a manhole manufacturing factory having a definite quality control.

[0082] However, when the built-in manhole is used in the pipe jacking method (the manhole is previously fabricated in the factory and transferred in a building site), the conventional technique can not respond to the circumstance because the flexible cut-off joint is inserted between the drilled hole of the manhole and the sewerage pipe after the setting of the manhole and the joining with the pipe in the building site.

[0083] In the invention, the flexible cut-off joint for manhole structure is fitted between the pipe and the rigid cylindrical body, so that the irregularity of the drilled hole face is not insignificant because the rubber flexible portion in the flexible cut-off joint for manhole structure does not directly contact with the drilled hole face of the manhole.

[0084] Moreover, in the invention, the above-mentioned adhesive material or self-adhering material adhering to the aforementioned filler for manhole wall can be attached or a water-expansible polymer resin can be disposed between the drilled hole face of the build-up manhole and the rigid cylindrical body.

[0085] In the invention, it is preferable that the rigid cylindrical body has a strip-shaped protrusion portion protruding toward a side of the manhole wall. Such a protrusion portion is advantageous to position the end portion of the filler for manhole wall to be poured into the outer periphery of the cylindrical body.

[0086] Also, the protrusion portion can prevent from overbriming of the filler for manhole wall to the outside of the manhole but also can thicken the filler for manhole wall contacting with the cylindrical body, so that the adhesion property between the cylindrical body and the manhole wall can be improved.

[0087] Such a protrusion portion can be made from the various materials in various shapes. Preferably, the protrusion portion is made of the same material as the cylindrical body, and is comprised from the material and the shape outstanding the poured filler for manhole wall likewise the cylindrical body.

[0088] The expansion band and the fastening band according to the invention may be made from a polymer material having an appropriate rigidity unless they can sufficiently press-fix the tubular flexible body to the cylindrical body and the pipe to conduct a sufficient water-stop between them.

[0089] Each of the flange, the cylindrical body, the expansion band and the fastening band according to the invention is desirably made of steel, particularly stainless steel having an excellent corrosion resistance.

[0090] The invention is described in detail with reference to the drawings.

[0091] **FIG. 1** is a vertical cross-sectional view of an embodiment of the manhole structure according to the invention. **FIG. 2** is a vertical cross-sectional view of another embodiment of the manhole structure according to the invention. **FIG. 3** is a transverse sectional view of the manhole structure of **FIG. 2**. **FIG. 4** is a vertical cross-sectional view of the other embodiment of the manhole structure according to the invention. **FIG. 5** is a perspective view of a flexible cut-off joint for manhole used in the manhole structure of **FIG. 4**. **FIG. 6** is a perspective view of another embodiment of the flexible cut-off joint for manhole structure according to this invention. **FIG. 7** is a vertical cross-sectional view illustrating an embodiment of constructing the manhole structure of **FIG. 4**. **FIGS. 8-11** are vertical cross-sectional views illustrating an embodiment of constructing the manhole structure according to the invention every step, respectively. **FIG. 12** is a vertical cross-sectional view of a further embodiment of the manhole structure according to the invention.

[0092] As shown in **FIG. 1**, a manhole structure **1** as one embodiment of the invention is formed by joining a manhole wall **2** of cast-in-place concrete to a pipe **3**.

[0093] In the manhole structure **1**, the pipe **3** is laid within a vertical shaft **4** by a pipe jacking method, and a flexible cut-off joint **5** for manhole is arranged on an outer periphery of the pipe **3**.

[0094] The flexible cut-off joint **5** for manhole comprises a rigid cylindrical body **6** and a tubular flexible body **7** located at an inside of the cylindrical body **6**, in which the tubular flexible body **7** is made of an elastic body. The tubular flexible body **7** is typically made of rubber, and has a tubular shape and surrounds the periphery of the pipe **3**.

[0095] An end **7***a* of the tubular flexible body **7** is press-fixed to an inner surface of the cylindrical body **6** with an expansion band **8**, and the other end **7***b* of the tubular flexible body **7** is fixed to an outer periphery of the pipe **3** by tightening with a fastening band **9**.

[0096] The expansion band **8** radially expands its periphery to push the end **7***a* of the tubular flexible body **7** onto the inside of the cylindrical body **6**.

[0097] On the other hand, the fastening band **9** fixes the other end **7***b* of the tubular flexible body **7** on the pipe **3** by tightening from an outside.

[0098] Both the fixing of the end **7***a* of the tubular flexible body **7** to the inside of the cylindrical body **6** and the fixing of the other end **7***b* of the tubular flexible body **7** to the pipe **3** can be conducted by selecting a proper adhesive material and using the bands with such an adhesive material.

[0099] The manhole wall **2** is formed by pouring a concrete on an outer periphery of the cylindrical body **6**. Moreover, a soil retaining wall of the vertical shaft **4** forms a minimum workable area of concrete placing, so that a casing steel pipe **10** becomes an outer mold.

[0100] As mentioned above, in the manhole structure **1** of **FIG. 1**, when the concrete for the manhole wall **2** is placed after the fitting of the flexible cut-off joint **5** for manhole to the pipe **3**, the cylindrical body **6** forms a dam for the concrete of the manhole wall **2**, and a space is ensured between the cylindrical body **6** and the pipe **3** and the tubular flexible body **7** made of the elastic body connects the cylindrical body **6** to the pipe **3** in such a space.

[0101] The tubular flexible body **7** in the manhole structure **1** absorbs an expansion-contraction displacement, a bending displacement, a shearing displacement and the like between the manhole wall **2** and the pipe **3** without applying a load to the pipe **3**.

[0102] Moreover, an adhesive material or a self-adhering material adhering to the concrete can be attached to a surface of the cylindrical body **6** contacting with the concrete of the manhole wall **2** though it is not shown in the figure.

[0103] **FIG. 2** is a vertical cross-sectional view of a manhole structure **101** as another embodiment at a state of filling a mortar concrete **105** between a drilled hole surface **103***a* of a wall **103** of a built-in manhole **102** and a flexible cut-off joint **104** for manhole structure, and **FIG. 3** is a transverse sectional view thereof.

[0104] By connecting a cylindrical body **106** to a sewerage pipe **107** through a tubular flexible body **108** are ensured spaces **109***a*, **109***b* between the cylindrical body **106** and the sewerage pipe **107**, whereby an expansion-contraction displacement, a bending displacement, a shearing displacement and the like of the sewerage pipe can be absorbed without applying a load to the sewerage pipe **107**.

[0105] The tubular flexible body **108** is fixed to the inside of the cylindrical body **106** with an expansion band **110**. The

expansion band **110** radially expands its periphery to push an end **108***a* of the tubular flexible body **108** made of rubber onto the inside of the cylindrical body **106**. The fixation of the flexible body **108** onto the inside of the cylindrical body **106** may be conducted by selecting and using a proper adhesive.

[**0106**] Moreover, the other end **108***b* of the rubber tubular flexible body **108** as a pipe side attaching portion is fixed by tightening the pipe side attaching portion from its outside with a fastening band **111**. Also, the cylindrical body **106** and the pipe side attaching portion can be fixed by using the band **111** and an adhesive together.

[**0107**] The rubber tubular flexible body **108** is cylindrical and surrounds the pipe **107** from the outside. Although the cylindrical body **106** should be tightly fixed on the manhole **102** by filling the mortar concrete **105**, the operation of filling the mortar concrete can be conducted only from the inside of the manhole **102**.

[**0108**] A protrusion portion **112** serves to prevent the overbriming of the mortal concrete **105** filled from the inside of the manhole **102** toward the outside of the manhole.

[**0109**] Moreover, the filled mortal concrete **105** is contracted by drying with the lapse of time to form a fine interstice in a boundary face to the drilled hole **103***a* of the manhole **102** or to the outer peripheral face of the cylindrical body **106**, which is easy to cause water leakage.

[**0110**] For this end, water expansible polymer resins **113**, **114** and the like are disposed on the drilled hole surface **103***a* of the manhole **102** or the outer peripheral face of the cylindrical body **106** to conduct the water-stop through a plane pressure of the water expansible polymer resin expanded with water penetrated from the fine interstice.

[**0111**] **FIG. 4** shows a manhole structure **11** as the other embodiment of the invention. In the manhole structure **11**, a flexible cut-off joint **15** for manhole as shown in detail in **FIG. 5** is used instead of the flexible cut-off joint **5** for manhole in the manhole structure **1** of **FIG. 1**.

[**0112**] The flexible cut-off joint **15** for manhole comprises a rigid cylindrical body **16** and a tubular flexible body **17** located at the inside of the cylindrical body **16**, in which the tubular flexible body **17** is made of an elastic body likewise the flexible cut-off joint **5** for manhole.

[**0113**] Also, the manhole structure **11** of **FIG. 4** is the same as the manhole structure **1** in a point that an end **17***a* of the tubular flexible body **17** is press-fixed to an inner surface of the cylindrical body **16** with an expansion band **18**, and the other end **17***b* of the tubular flexible body **17** is press-fixed to an outer periphery of a pipe **13** by tightening with a fastening band **19**, and a manhole wall **12** is formed by pouring a concrete into an inside of a vertical shaft **14** on an outer periphery of the cylindrical body **16** with a casing steel pipe **20** as an outer mold.

[**0114**] In the manhole structure **11**, however, a flange **16***a* is provided on the outer periphery of the cylindrical body **16** in the flexible cut-off joint **15** for manhole. The manhole structure **11** of **FIG. 4** is different from the manhole structure **1** of **FIG. 1** in this point. The flange **16***a* bites into the concrete of the manhole wall **12** and serves to fix the cylindrical body **16** to the concrete of the manhole wall **12** and enhances the adhesion property between the cylindrical body **16** and the concrete of the manhole wall **12**.

[**0115**] Moreover, in the manhole structure **11**, a non-curing butyl rubber based self-adhering material **16***b* adhering to the concrete is attached to a face of the flange **16***a* contacting with the concrete of the manhole wall **12**.

[**0116**] In the manhole structure **11** of **FIG. 4**, when the concrete for manhole wall is placed after the flexible cut-off joint **15** for manhole is fitted onto the pipe **13**, the tubular flexible body **17** absorbs an expansion-contraction displacement, a bending displacement, a shearing displacement and the like between the manhole wall **12** and the pipe **13** without applying a load to the pipe **13** likewise the manhole structure **1** of **FIG. 1**.

[**0117**] A boundary face between the concrete of the manhole wall **12** and the cylindrical body **16** easily forms a water channel, and if the materials of these are different from each other, the boundary face more easily a water channel. In the cylindrical body **16** of **FIG. 4**, however, the flange **16***a* is provided and the non-curing butyl rubber based self-adhering material **16***b* adhering to the concrete is attached to the face of the flange **16***a* contacting with the concrete of the manhole wall **12**, so that the water leakage from the boundary face between them can be surely prevented.

[**0118**] A flexible cut-off joint **104** for a manhole structure of **FIG. 6** is used in the manhole structure **101**. The flexible cut-off joint **104** for manhole structure has a protrusion portion **112**, which is mainly different from the flexible cut-off joint **15** for manhole. The flexible cut-off joint **104** for manhole structure is used in the build-up manhole **102** of **FIGS. 2 and 3** and can be also used in the cast-in-place manhole as shown in **FIG. 1**.

[**0119**] **FIG. 7** is a cross-sectional view illustrating a step in the construction of the manhole structure of **FIG. 4**. After the pipe **13** such as sewerage pipe or the like is laid in the vertical shafts **14** by the pipe jacking method, the flexible cut-off joint **15** for manhole according to the invention is mounted on the pipe **13** such as sewerage pipe or the like.

[**0120**] After flexible cut-off joint **15** for manhole comprising the cylindrical body **16** and the tubular flexible body **17** made of the elastic body, wherein the one end **17***a* of the tubular flexible body **17** is previously connected by expanding with the expansion band **18**, is mounted on the pipe **13**, the other end **17***b* of the tubular flexible body is tightened on the outer periphery of the pipe **13** by the fastening band **19** to press-fix thereto.

[**0121**] In the invention, as shown in **FIGS. 8-11**, the build-up manhole **102** and the pipe **107** and the flexible joint **104** for manhole structure can be jointed to construct the manhole structure **101** shown in **FIGS. 2 and 3**.

[**0122**] **FIG. 8** is a vertical cross-sectional view showing a state of laying the sewerage pipe **107** between the vertical shafts by the pipe jacking method, and **FIG. 9** shows a state of suspending down and setting the manhole **102**.

[**0123**] **FIG. 10** shows a state of extending the sewerage pipe **122** to the inner surface of the manhole **102** with a socket **121**. In the case of the pipe jacking method, the flexible cut-off joint **104** can be fitted at this state.

[**0124**] **FIG. 11** shows a state immediately before inserting and setting the flexible cut-off joint **104** to the drilled hole

surface **103***a* of the manhole **102**. The manhole structure shown in **FIGS. 2 and 3** can be obtained by setting the joint and filling a mortar concrete between the cylindrical body and the drilled hole surface of the manhole.

[**0125**] In the invention can also be obtained a manhole structure as shown in **FIG. 12**. In the manhole structure **21** shown in **FIG. 12** is used a flexible cut-off joint **25** for manhole.

[**0126**] The manhole structure **21** is the same as the manhole structures of **FIGS. 1 and 4** except for the flexible cut-off joint **25** though the concrete wall is omitted.

[**0127**] The flexible cut-off joint **25** for manhole comprises a rigid cylindrical body **26** and a tubular flexible body **27** located at the inside of the cylindrical body **26**, in which the tubular flexible body **27** is made of an elastic body. It is the same as the flexible cut-off joint **15** for manhole in a point that a flange **26***a* and a non-curing butyl rubber based self-adhering material **26***b* are provided on the outer periphery of the cylindrical body **26**.

[**0128**] Also, the manhole structure **21** of **FIG. 5** is the same as the manhole structure **11** in a point that an end **27***a* of the tubular flexible body **27** is press-fixed to the inner surface of the cylindrical body **26** with an expansion band **28**, the other end **27***b* of the tubular flexible body **27** is press-fixed to the outer periphery of the pipe **23** with a fastening band **29** and the manhole wall is formed by pouring a concrete in the vertical shaft **24** on the outer periphery of the cylindrical body **26** with a casing steel pipe **30** as an outer mold.

[**0129**] However, the manhole structure **21** is different from the manhole structure **11** of **FIG. 4** in a point that an end **27***a* of the tubular flexible body **27** used in the flexible cut-off joint **25** for manhole is protruded in a direction opposite to the casing steel pipe **30** to form a turnback structure and the end **27***a* is fitted onto the cylindrical body **26**. This structure is advantageous because the shape makes it easier to further absorb the displacement between the manhole wall and the pipe.

[**0130**] [Effect of the Invention]

[**0131**] According to the manhole structure of the invention, the manhole wall is formed on the outer periphery of the cylindrical body and the cylindrical body and the pipe are connected to each other through the tubular flexible body made of the elastic body, so that even if different loads are applied or a difference of relative displacement is produced to cause position shifting between the manhole wall and the pipe by a large-scale diastrophism such as earthquakes or the like, the tubular flexible body can absorb the load and displacement to prevent the breakage of the joining portion between the manhole wall and the pipe.

[**0132**] According to the manhole structure of the invention, after the laying of the pipe is completed by the pipe jacking method, the flexible cut-off joint **15** for manhole is mounted on the pipe and the manhole wall concrete is constructed, whereby the joining portion between the pipe and the manhole wall can be simply made flexible with an excellent working property and also the water-stop ability of the joining portion can be improved.

[**0133**] Moreover, the displacement load applied to the cylindrical body is effectively absorbed by locating the tubular flexible body of the flexible cut-off joint at the inside of the cylindrical body in a space between the cylindrical body and the pipe, and also it is prevented to obstruct the flexibility of the tubular flexible body by adhesion and solidification of concrete filled in the construction, and further it can be prevented that the tubular flexible body is deteriorated by always contacting with earth and sand in the underground manhole structure.

1. A manhole structure comprising a manhole and a pipe joined thereto, in which the pipe is driven and laid in a vertical shaft, and a flexible cut-off joint for manhole structure is disposed on an outer periphery of the pipe, and the flexible cut-off joint for manhole structure comprises a rigid cylindrical body and a tubular flexible body located in a space between the cylindrical body and the pipe and at an inside of the cylindrical body, and the tubular flexible body is made of an elastic body absorbing a displacement between the cylindrical body and the pipe, and at least a part of the tubular flexible body is fixed to the cylindrical body and the pipe, respectively, and the outer periphery of the cylindrical body is fixed with a filler for manhole wall.

2. A manhole structure according to claim 1, wherein said manhole is a cast-in-place concrete manhole, and a wall of said manhole is formed by pouring said filler for manhole wall.

3. A manhole structure according to claim 1, wherein said manhole is a ready-made build-up manhole, and a drilled hole surface is provided on a wall of said manhole, and said filler for manhole wall is poured between an outer periphery of said cylindrical body and said drilled hole surface.

4. A manhole structure according to claim 1, wherein said cylindrical body has a strip-shaped protrusion portion protruding toward a wall side of said manhole, and an end of said filler for manhole wall pored into the outer periphery of said cylindrical body is positioned by said protrusion portion.

5. A manhole structure according to claim 1, wherein a flange is provided on an outer periphery of said cylindrical body.

6. A manhole structure according to claim 5, wherein a non-curing butyl rubber adhering to said filler for manhole wall is attached to a face of said flange contacting with said filler for manhole wall.

7. A manhole structure according to claim 1, wherein an end of said tubular flexible body is press-fixed to an inner surface of said cylindrical body with an expansion band, and the other end of said tubular flexible body is press-fixed to an outer periphery of said pipe by tightening with a fastening band.

8. A flexible cut-off joint for manhole structure for joining a manhole to a pipe, in which said flexible cut-off joint for manhole comprises a rigid cylindrical body and a tubular flexible body located at an inside of said cylindrical body in a space between said cylindrical body and said pipe, and said tubular flexible body is made of an elastic body absorbing a displacement between said cylindrical body and said pipe, and at least a part of said tubular flexible body is fixed to said cylindrical body and said pipe, respectively, and when the manhole structure is formed, said pipe is driven and laid in a vertical shaft and said flexible cut-off joint for manhole is mounted on the outer periphery of said pipe and the outer periphery of said cylindrical body is fixed with a filler for manhole wall.

9. A flexible cut-off joint for manhole structure according to claim 8, wherein an end of said tubular flexible body is press-fixed to an inner surface of said cylindrical body with an expansion band and the other end of said tubular flexible body is press-fixed to an outer periphery of said pipe by tightening with a fastening band.

10. A method for the construction of a manhole structure by joining a manhole and a pipe, which comprises driving and laying said pipe in a vertical shaft, mounting a flexible cut-off joint for manhole structure on an outer periphery of said pipe in which said flexible cut-off joint for manhole structure comprises a rigid cylindrical body and a tubular flexible body located at an inside of said cylindrical body in a space between said cylindrical body and said pipe and said tubular flexible body is made of an elastic body absorbing a displacement between said cylindrical body and said pipe and at least a part of said tubular flexible body is fixed to said tubular body and said pipe, and pouring a filler for manhole wall into the outer periphery of said cylindrical body.

11. A manhole structure according to claim 2, wherein said cylindrical body has a strip-shaped protrusion portion protruding toward a wall side of said manhole, and an end of said filler for manhole wall pored into the outer periphery of said cylindrical body is positioned by said protrusion portion.

12. A manhole structure according to claim 3, wherein said cylindrical body has a strip-shaped protrusion portion protruding toward a wall side of said manhole, and an end of said filler for manhole wall pored into the outer periphery of said cylindrical body is positioned by said protrusion portion.

13. A manhole structure according to claim 2, wherein a flange is provided on an outer periphery of said cylindrical body.

14. A manhole structure according to claim 3, wherein a flange is provided on an outer periphery of said cylindrical body.

15. A manhole structure according to claim 4, wherein a flange is provided on an outer periphery of said cylindrical body.

16. A manhole structure according to claim 2, wherein an end of said tubular flexible body is press-fixed to an inner surface of said cylindrical body with an expansion band, and the other end of said tubular flexible body is press-fixed to an outer periphery of said pipe by tightening with a fastening band.

17. A manhole structure according to claim 3, wherein an end of said tubular flexible body is press-fixed to an inner surface of said cylindrical body with an expansion band, and the other end of said tubular flexible body is press-fixed to an outer periphery of said pipe by tightening with a fastening band.

18. A manhole structure according to claim 4, wherein an end of said tubular flexible body is press-fixed to an inner surface of said cylindrical body with an expansion band, and the other end of said tubular flexible body is press-fixed to an outer periphery of said pipe by tightening with a fastening band.

19. A manhole structure according to claim 5, wherein an end of said tubular flexible body is press-fixed to an inner surface of said cylindrical body with an expansion band, and the other end of said tubular flexible body is press-fixed to an outer periphery of said pipe by tightening with a fastening band.

20. A manhole structure according to claim 6, wherein an end of said tubular flexible body is press-fixed to an inner surface of said cylindrical body with an expansion band, and the other end of said tubular flexible body is press-fixed to an outer periphery of said pipe by tightening with a fastening band.

* * * * *