Nov. 22, 1949 G. DIEMER 2,488,586

PIEZOELECTRICAL APPARATUS

Filed Nov. 22, 1946

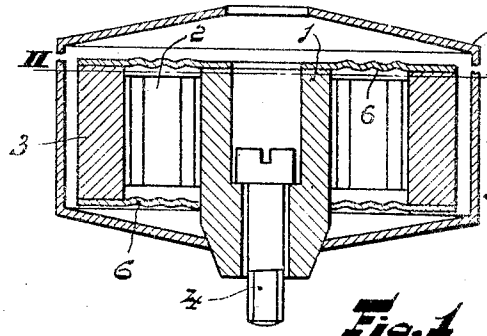

Fig. 1

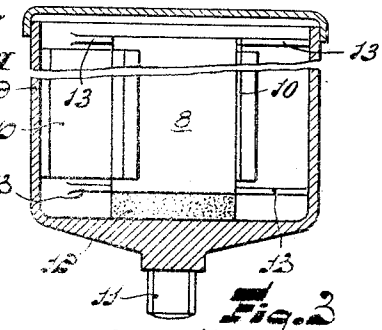

Fig. 3

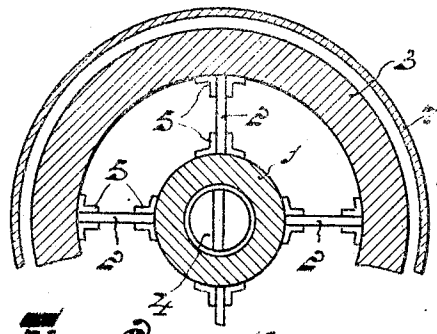

Fig. 2

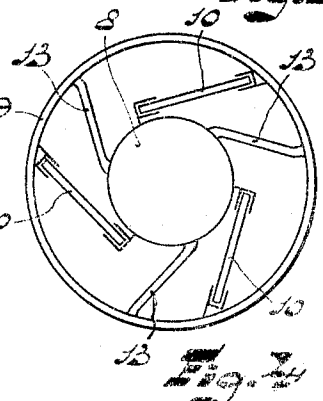

Fig. 4

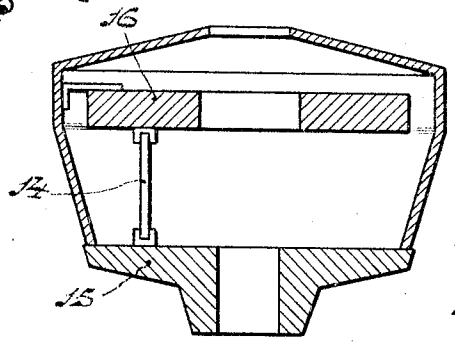

Fig. 5

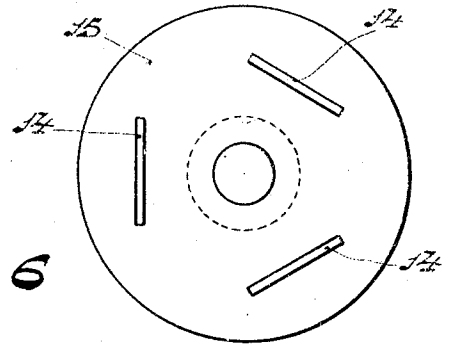

Fig. 6

INVENTOR
GESINUS DIEMER.

BY

AGENT

Patented Nov. 22, 1949 2,488,586

UNITED STATES PATENT OFFICE

2,488,586

PIEZOELECTRICAL APPARATUS

Gesinus Diemer, Eindhoven, Netherlands, assignor to Hartford National Bank and Trust Company, Hartford, Conn., as trustee

Application November 22, 1946, Serial No. 711,677
In the Netherlands September 5, 1945

Section 1, Public Law 690, August 8, 1946

6 Claims. (Cl. 171—327)

1

This invention relates to piezo-electrical apparatus, more particularly to an oscillation pick-up, comprising two masses adapted to move relatively to one another and symmetrically arranged with respect to the direction of the oscillation, said masses being interconnected by the crystal body. In this type of apparatus the masses differ in that on one of the masses being driven, the two masses vibrate with a certain phase difference, the mass which is directly acted upon by the oscillating object being preferably of the minimum possible and the other mass (complementary mass) of the maximum possible size. The direction of the oscillations will be briefly referred to hereinafter as the axis.

With measuring and indicating apparatus it is already known to interconnect the said masses, with the interposition of a resilient medium, by a piezo-electrical annular, cylindrical or polygon-shaped crystal body arranged symmetrically to the axis. This body is built up from a plurality of thoroughly interconnected, for example cemented crystal plates, the main axes of which are at an angle of 45° with the piezo-electrical *b*- and *c*-axes.

Securing crystal plates to form a single body often introduces difficulties. In the case of a lower natural frequency it is possible to reduce the disturbing effect of the resonance peak due to the presence of the resilient medium, but this has a limitation in that the apparatus becomes considerably less sensitive.

In the apparatus according to the invention these disadvantages are obviated, on the one hand by the use of a plurality of separate crystal plates, which are arranged symmetrically to the axis and the electrode surfaces of which are parallel to the oscillation axis, and on the other hand by rigidly securing the said plates to the masses.

This ensures firstly a simple and robust construction. Then it is possible to subject the crystal plates either to compressive or to shearing strength. The rigid attachment in such manner that the crystal plates are subjected to a compressive or to a shearing strength enables the use of comparatively thin (0.5–1 mm.) crystal plates and of a comparatively large complementary mass of about 100 grams, whilst at the same time a high natural frequency of some few thousands of cycles/sec. in view of the other dimensions of the crystal plates can be achieved. The use of thin plates has the advantage of a high electrical capacity, whilst the heavy complementary mass has the advantage of high sensitiveness.

In particular cases of extremely high natural frequency such as 10^5 cycles/sec. the plates may be made thicker and the complementary mass smaller, the other dimensions and the number

2

of plates obviously having to be altered to accord with the special requirements.

In order to safeguard the crystal plates against detrimental effects of a relative displacement of the masses about the axis, the masses may in addition be interconnected by members which are resilient in the direction of the axis and are rigid relatively to a relative displacement about the axis.

In order that the invention may be clearly understood and readily carried into effect, it will now be described more fully with reference to the accompanying drawing, in which three forms of oscillation pick-ups according to the invention are represented by way of example.

The oscillation pick-up shown in Figs. 1 and 2 is primarily constituted by a driving cylinder 1, crystal plates 2 and a ring 3 operative as a complementary mass. The driving cylinder which is made, for example, of Duralumin, is secured to the oscillating object by means of a screw bolt 4. The ring 3, which concentrically surrounds the driving cylinder 1, is made, for example, of iron or lead. Four separate radial crystal plates 2 are arranged radially to the axis. They are rigidly secured to the driving cylinder 1 and to the ring 3. This rigid connection may be obtained by providing both the cylinder and the ring with pinching ledges 5 between which the crystal plates are cemented. The ring and the cylinder are, moreover, connected by two circular plates 6, for example, of iron, having central recesses and concentric ribs, so that the ring can only move in the direction of the common axis. The assembly is surrounded by a housing 7, for example of Duralumin, which is secured to the driving cylinder and is provided with a central aperture at the top to give access to the screw bolt 4.

The picked-up oscillations vary in the direction of the common axis. The crystal plates of this oscillation pick-up are subjected to a shearing strength. In the case of Seignette salt they are cut out normally to the electrical axis of the mother-crystal and the sides of the rectangular plates are, for example, parallel to the *b*- and *c*-axes of the mother crystal.

In the oscillation pick-up shown in Figs. 3 and 4 the complementary mass 8 is surrounded by driving cylinder 9. In this case, the crystal plates 10 are substantially tangential to the complementary mass 8 and also rigidly secured to the cylinder and the complementary mass. Instead of a separate fastening bolt, the driving cylinder, which also constitutes the housing, has a threaded extension 11 at the bottom. The complementary mass 8 and the bottom of driving cylinder 9 have arranged between them a damping body 12, for example, of rubber. In this form of construction, given by way of ex-

ample, the crystal plates are also subjected to a shearing strength. The tangential arrangement of the crystal plates allows for small radial dimensions of the oscillation pick-up. The orientation of the plates with respect to the axes of the mother-crystal is similar to that of the plates of the apparatus shown in Figs. 1 and 2. The complementary mass 8 and the driving cylinder 9 have arranged in between them locking strips 13 to prevent the occurrence of torsional oscillations.

In the oscillation pick-up shown in Figs. 5 and 6 the crystal plates 14 are subjected to a compressive or a tensile strength respectively. In the case of Seignette salt they are also cut out normally to the *a*-axis of the mother-crystal, but the sides of the rectangular plates are at angles of 45° with the *b*- and *c*-axes of the mother-crystal. The crystal plates are rigidly secured to a driving member 15 to be attached to the oscillating object and to an annular complementary mass 16.

The oscillation pick-ups shown only react with translation accelerations; they are not sensitive to tumbling oscillations. The mass of the crystal plates is comparatively large compared with the entire oscillating system of the apparatus, so that a large part of the energy supplied is effectively utilized. The natural frequency can be maintained high and the capacity also has a favourable value. The screw connection permits of intimately securing the pick-up to the object under examination, so that contact resonance is obviated.

What I claim is:

1. Piezo-electric pick-up apparatus, comprising a first mass, a second mass and a plurality of crystal plates rigidly secured between the said masses, said masses being adapted to move relative to one another in the direction of the common axis of oscillation, said plates arranged in symmetrical relation to the said axis of oscillation, said plates being provided with electrode surfaces parallel to the said axis.

2. Piezo-electric pick-up apparatus, comprising a first mass, a second mass and a plurality of crystal plates rigidly secured to the said masses, said masses being adapted to move relative to each other in the direction of the common axis of oscillation, said plates being radially arranged in symmetrical relation to the axis of oscillation of the said masses, said plates being provided with electrode surfaces parallel to the said axis.

3. Piezo-electric pick-up apparatus, comprising a cylindrical mass, a housing mass, a plurality of locking strips and a plurality of crystal plates rigidly secured to the said masses, said plates arranged in symmetrical tangential relation to the periphery of the said cylindrical mass, said plates being provided with electrode surfaces parallel to the said axis, said strips being adapted to lock the said masses against torsional oscillations.

4. Piezo-electric pick-up apparatus, comprising a first mass, a second mass and a plurality of relatively crystal plates rigidly secured between the said masses, and a damping body, said plates arranged in symmetrical relation to the axis of oscillation of the said masses, said plates being provided with electrode surfaces parallel to the said axis, said body resiliently connecting the said masses in the direction of the said axis.

5. Piezo-electric oscillation pick-up apparatus, comprising a first mass, a second mass and a plurality of crystal plates rigidly secured between the said masses, said masses being adapted to move relative to each other and arranged symmetrically to the direction of the said oscillations, said plates arranged in symmetrical relation to the axis of oscillation of the said masses, said plates being provided with electrode surfaces parallel to the said axis, and to the *b*- and *c*-axes of the mother-crystal.

6. Piezo-electric pick-up apparatus, comprising a driving mass, a driven mass and a plurality of crystal plates rigidly secured between the said masses, said masses symmetrically arranged relative to the common axis of oscillation, said plates arranged in symmetrical relation to the said axis of oscillation, said plates being provided with electrode surfaces parallel to the said axis and normal to the *a*-axis of the mother-crystal.

GESINUS DIEMER.

No references cited.