(12) INTERNATIONAL APPLICATION PUBLISHED UNDER THE PATENT COOPERATION TREATY (PCT)

(19) World Intellectual Property Organization
International Bureau

(43) International Publication Date
18 October 2007 (18.10.2007)

PCT

(10) International Publication Number
WO 2007/117497 A3

(51) International Patent Classification:
F28D 7/02 (2006.01) *B67D 1/08* (2006.01)

(21) International Application Number:
PCT/US2007/008373

(22) International Filing Date: 5 April 2007 (05.04.2007)

(25) Filing Language: English

(26) Publication Language: English

(30) Priority Data:
60/789,643 5 April 2006 (05.04.2006) US

(71) Applicant *(for all designated States except US)*: **LAMINAR TECHNOLOGIES, LLC** [US/US]; 12 South Michigan Avenue, Chicago, IL 60603-3213 (US).

(72) Inventors; and
(75) Inventors/Applicants *(for US only)*: **YOUNKLE, Matthew, C.** [US/US]; 1150 North Lake Shore Drive, Apt 21C, Chicago, IL 60611-1026 (US). **DRESSLER, Kristofer** [US/US]; 1212 West Waveland Avenue #2, Chicago, IL 60613 (US).

(74) Agent: **PIOLI, Janet, A.**; Brinks Hofer Gilson & Lione, P.o. Box 10087, Chicago, IL 60610 (US).

(81) Designated States *(unless otherwise indicated, for every kind of national protection available)*: AE, AG, AL, AM, AT, AU, AZ, BA, BB, BG, BH, BR, BW, BY, BZ, CA, CH, CN, CO, CR, CU, CZ, DE, DK, DM, DZ, EC, EE, EG, ES, FI, GB, GD, GE, GH, GM, GT, HN, HR, HU, ID, IL, IN, IS, JP, KE, KG, KM, KN, KP, KR, KZ, LA, LC, LK, LR, LS, LT, LU, LY, MA, MD, MG, MK, MN, MW, MX, MY, MZ, NA, NG, NI, NO, NZ, OM, PG, PH, PL, PT, RO, RS, RU, SC, SD, SE, SG, SK, SL, SM, SV, SY, TJ, TM, TN, TR, TT, TZ, UA, UG, US, UZ, VC, VN, ZA, ZM, ZW.

(84) Designated States *(unless otherwise indicated, for every kind of regional protection available)*: ARIPO (BW, GH, GM, KE, LS, MW, MZ, NA, SD, SL, SZ, TZ, UG, ZM, ZW), Eurasian (AM, AZ, BY, KG, KZ, MD, RU, TJ, TM), European (AT, BE, BG, CH, CY, CZ, DE, DK, EE, ES, FI, FR, GB, GR, HU, IE, IS, IT, LT, LU, LV, MC, MT, NL, PL, PT, RO, SE, SI, SK, TR), OAPI (BF, BJ, CF, CG, CI, CM, GA, GN, GQ, GW, ML, MR, NE, SN, TD, TG).

Published:
— *with international search report*

(88) Date of publication of the international search report:
6 March 2008

(54) Title: IN-LINE BEVERAGE CHILLING APPARATUS

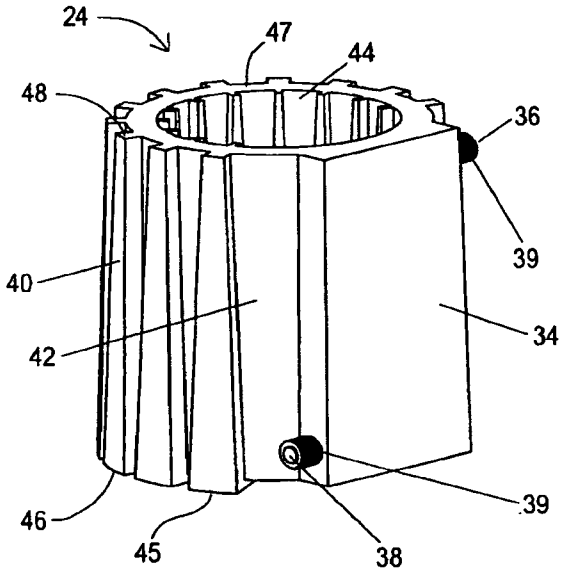

(57) Abstract: An apparatus for cooling a beverage, including a beverage conduit encased within a thermally conductive body, which is placed in contact with a cooling medium, where substantially all of the surface area of the conduit is in contact with the thermally conductive body, and a cooling medium and substantially all of the surface of the thermally conductive body is in contact with the cooling medium when the apparatus is in its intended operating position. The apparatus may cool at beverage traveling through conduit from a storage temperature to a serving temperature.

WO 2007/117497 A3

INTERNATIONAL SEARCH REPORT

International application No
PCT/US2007/008373

A. CLASSIFICATION OF SUBJECT MATTER
INV. F28D7/02 B67D1/08

According to International Patent Classification (IPC) or to both national classification and IPC

B. FIELDS SEARCHED

Minimum documentation searched (classification system followed by classification symbols)
B67D F28D F28F F25D

Documentation searched other than minimum documentation to the extent that such documents are included in the fields searched

Electronic data base consulted during the international search (name of data base and, where practical, search terms used)
EPO-Internal

C. DOCUMENTS CONSIDERED TO BE RELEVANT

Category*	Citation of document, with indication, where appropriate, of the relevant passages	Relevant to claim No.
X	US 2 663 548 A (CECIL BOLING) 22 December 1953 (1953-12-22) column 1, lines 12-15 column 2, lines 46-49 column 2, lines 23-31; claim 1; figures	1-20
X	GB 649 892 A (SPACARB INC) 7 February 1951 (1951-02-07) page 1, line 85 - page 2, line 65; figure 1	1-12,20
A	JP 58 019697 A (AISIN SEIKI) 4 February 1983 (1983-02-04) abstract; figures 2,5,6	13

-/--

[X] Further documents are listed in the continuation of Box C.

[X] See patent family annex.

* Special categories of cited documents :

"A" document defining the general state of the art which is not considered to be of particular relevance

"E" earlier document but published on or after the international filing date

"L" document which may throw doubts on priority claim(s) or which is cited to establish the publication date of another citation or other special reason (as specified)

"O" document referring to an oral disclosure, use, exhibition or other means

"P" document published prior to the international filing date but later than the priority date claimed

"T" later document published after the international filing date or priority date and not in conflict with the application but cited to understand the principle or theory underlying the invention

"X" document of particular relevance; the claimed invention cannot be considered novel or cannot be considered to involve an inventive step when the document is taken alone

"Y" document of particular relevance; the claimed invention cannot be considered to involve an inventive step when the document is combined with one or more other such documents, such combination being obvious to a person skilled in the art.

"&" document member of the same patent family

Date of the actual completion of the international search	Date of mailing of the international search report
16 November 2007	12/12/2007

Name and mailing address of the ISA/	Authorized officer
European Patent Office, P.B. 5818 Patentlaan 2 NL – 2280 HV Rijswijk Tel. (+31-70) 340-2040, Tx. 31 651 epo nl, Fax: (+31-70) 340-3016	Müller, Claus

Form PCT/ISA/210 (second sheet) (April 2005)

INTERNATIONAL SEARCH REPORT

International application No
PCT/US2007/008373

C(Continuation). DOCUMENTS CONSIDERED TO BE RELEVANT

Category*	Citation of document, with indication, where appropriate, of the relevant passages	Relevant to claim No.
A	GB 562 864 A (FREDERICK JOSEPH GROSE; ERNST WILHELM STEINITZ) 19 July 1944 (1944-07-19) page 1, lines 8-12; figure 4	13
A	EP 1 334 950 A (WHITLENGE DRINK EQUIPMENT LTD [GB]) 13 August 2003 (2003-08-13) paragraphs [0017] - [0019] paragraph [0023]; figures	1,13,20

INTERNATIONAL SEARCH REPORT

Information on patent family members

International application No
PCT/US2007/008373

Patent document cited in search report	Publication date	Patent family member(s)	Publication date
US 2663548 A	22-12-1953	NONE	
GB 649892 A	07-02-1951	NONE	
JP 58019697 A	04-02-1983	NONE	
GB 562864 A	19-07-1944	NONE	
EP 1334950 A	13-08-2003	GB 2386675 A	24-09-2003