US00D335676S

United States Patent [19]

Szybura

[11] Patent Number: Des. 335,676

[45] Date of Patent: ** May 18, 1993

[54] **ADJUSTABLE HOLDER FOR A GAS TORCH**

[76] Inventor: **William S. Szybura**, P.O. Box 563, Orting, Wash. 98360

[**] Term: **14 Years**

[21] Appl. No.: **823,561**

[22] Filed: **Jan. 22, 1992**

[52] **U.S. Cl.** **D15/144**; D6/466; D7/621; D8/71

[58] **Field of Search** D15/139, 140, 144, 147, D15/144.1, 144.2, 199; D8/71; D7/620, 621; D19/85; D11/182; 211/71, 13; 248/313

[56] **References Cited**

U.S. PATENT DOCUMENTS

D. 199,773	12/1964	Mueller	D7/621
D. 202,578	10/1965	Bednarski	D15/147 X
D. 203,055	11/1965	Robinson	D7/621 X
D. 290,099	6/1987	Andersson	D11/182 X
D. 294,362	2/1988	Sinclair	D15/144
D. 299,150	12/1988	Birch	D19/85
2,926,879	3/1960	Dietrich	D7/621 X
3,603,550	9/1971	Byrd	211/71 X
4,023,761	5/1977	Molis	211/71 X
5,025,935	6/1991	Hadachek	211/13 X
5,100,007	3/1992	Espasandin et al.	248/313 X

Primary Examiner—Alan P. Douglas
Assistant Examiner—Jeffrey Asch
Attorney, Agent, or Firm—Roy E. Mattern, Jr.

[57] **CLAIM**

The ornamental design for an adjustable holder for a gas torch, as shown and described.

DESCRIPTION

FIG. **1** is a perspective view of an adjustable holder for a gas torch showing my new design, the broken line showing of a gas torch being for illustrative purposes;
FIG. **2** is a left side view thereof, with a right side view being a mirror image thereof;
FIG. **3** is a back view thereof;
FIG. **4** is a front view thereof;
FIG. **5** is a top view thereof; and,
FIG. **6** is a bottom view thereof.

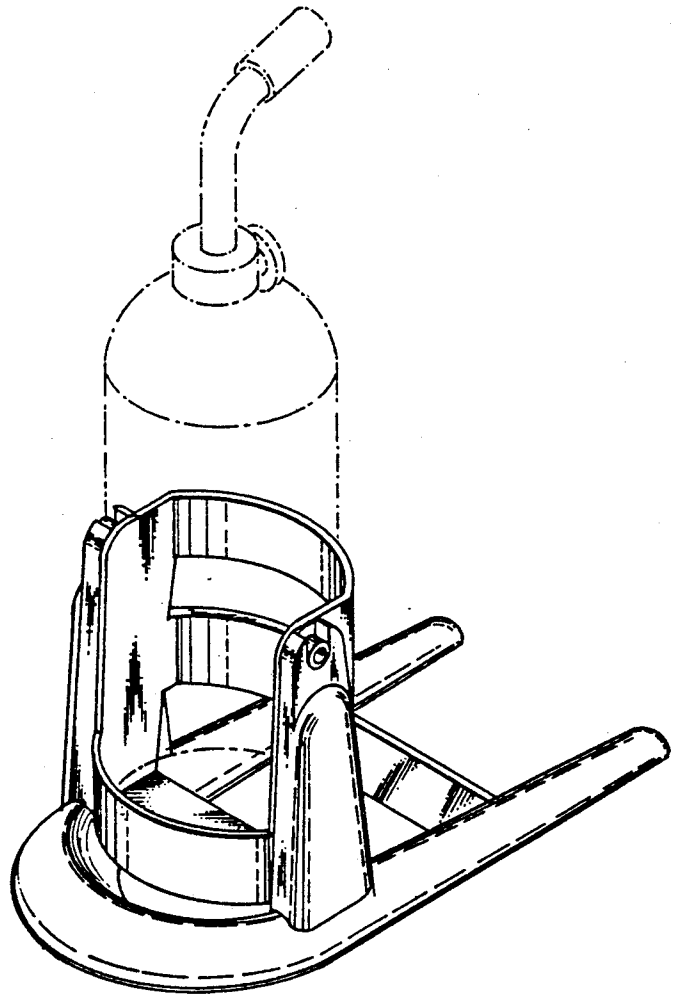

FIG. 1

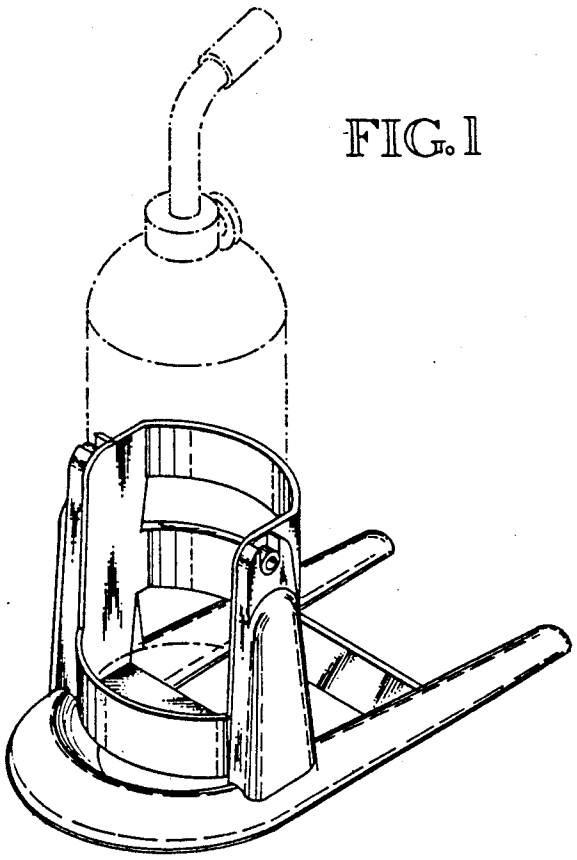

FIG. 2

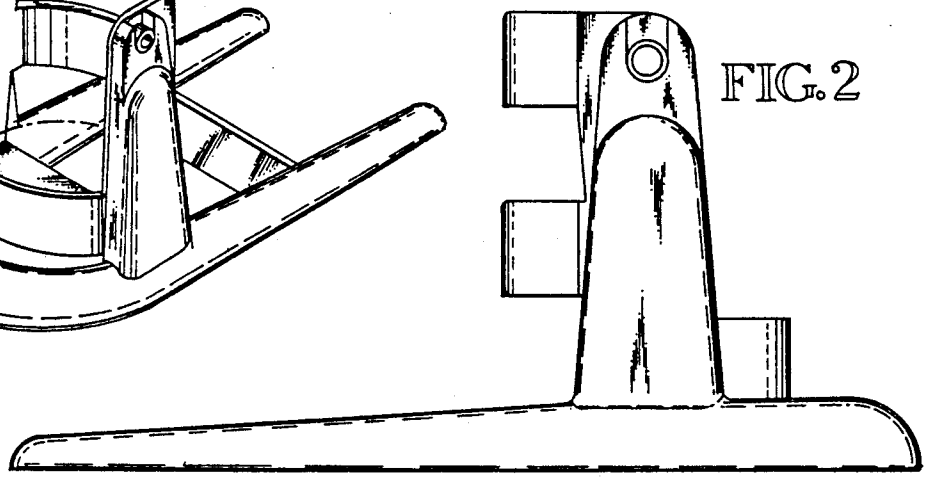

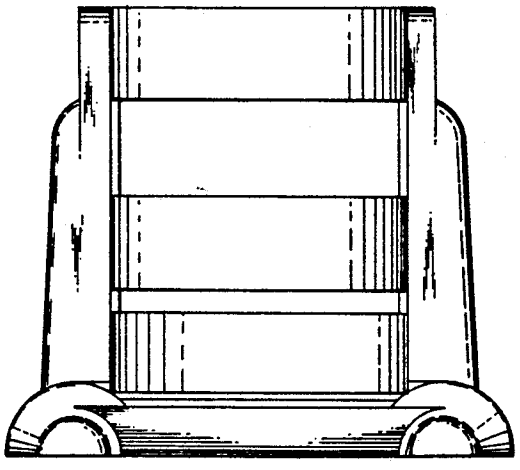

FIG. 3

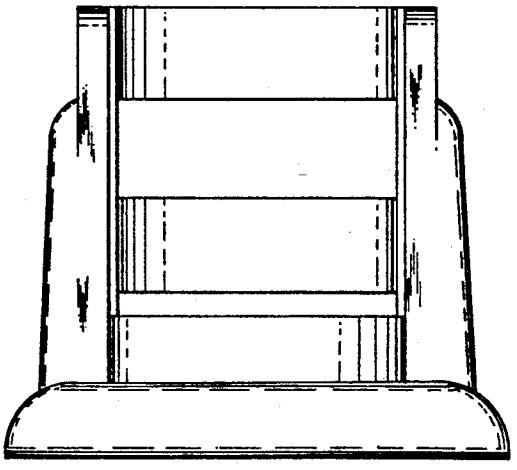

FIG. 4

FIG.5

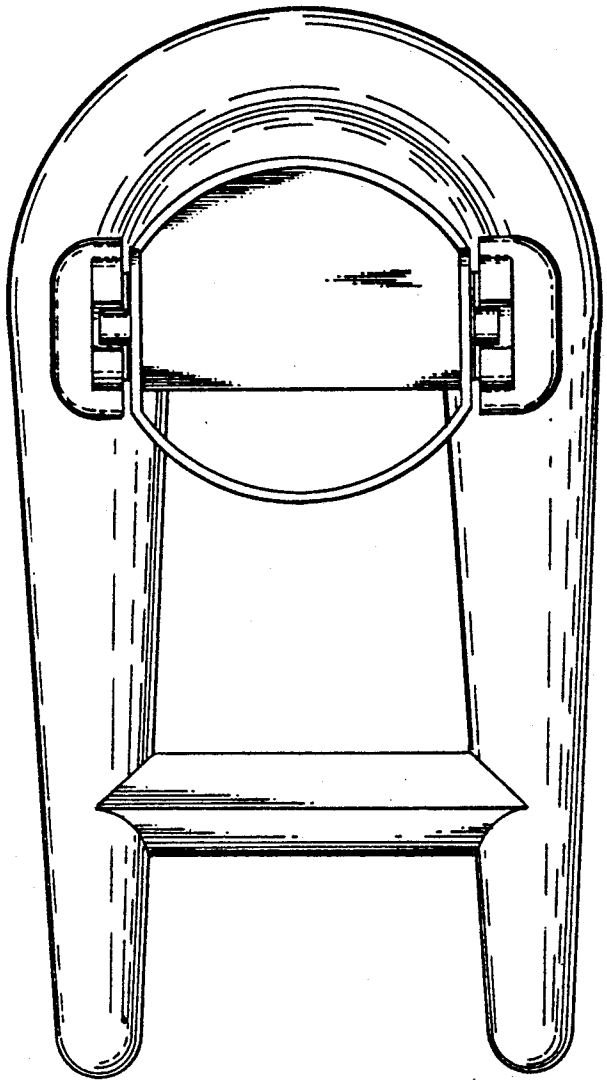

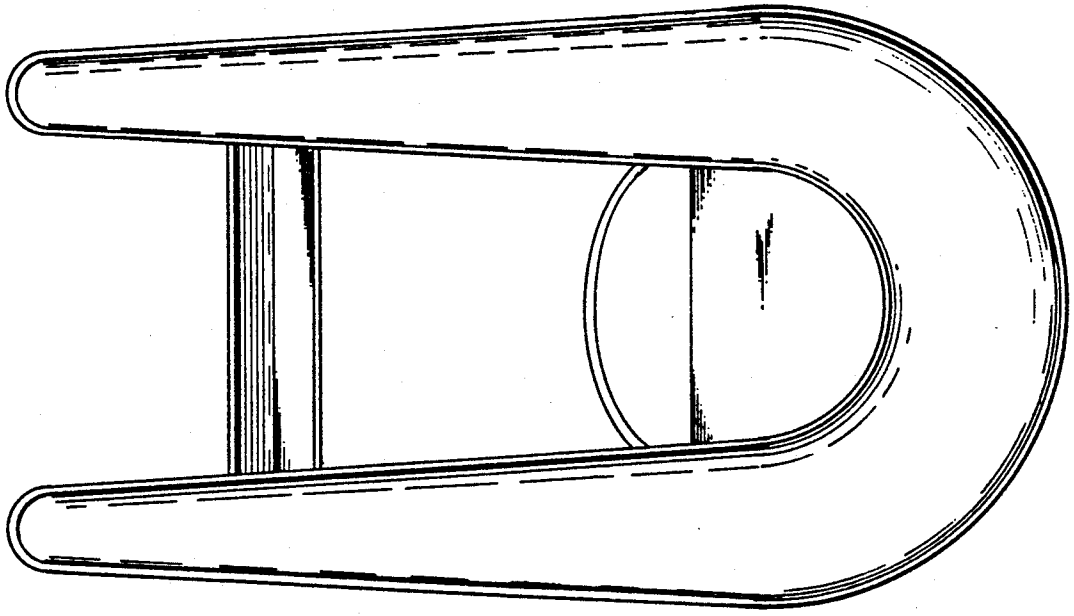

FIG.6