PCT WORLD INTELLECTUAL PROPERTY ORGANIZATION
International Bureau

INTERNATIONAL APPLICATION PUBLISHED UNDER THE PATENT COOPERATION TREATY (PCT)

(51) International Patent Classification 5 :		(11) International Publication Number:
E04B 5/48	A1	WO 92/12300
		(43) International Publication Date: 23 July 1992 (23.07.92)

(21) International Application Number: PCT/US92/00155

(22) International Filing Date: 9 January 1992 (09.01.92)

(30) Priority data:
639,513 10 January 1991 (10.01.91) US

(71) Applicant: STEELCASE INC. [US/US]; 901-44th Street, S.E., Grand Rapids, MI 49501 (US).

(72) Inventors: HODGES, Ronald, R. ; 5577 Kenowa, S.W., Grandville, MI 49418 (US). WELLER, George, V. ; 1144 Iroquois, S.E., Grand Rapids, MI 49506 (US).

(74) Agents: CARRIER, Robert, J. et al.; Price, Heneveld, Cooper, DeWitt & Litton, 695 Kenmoor, S.E., Post Office Box 2567, Grand Rapids, MI 49501 (US).

(81) Designated States: AT (European patent), BE (European patent), CA, CH (European patent), DE (European patent), DK (European patent), ES (European patent), FR (European patent), GB (European patent), GR (European patent), IT (European patent), JP, LU (European patent), MC (European patent), NL (European patent), SE (European patent).

Published
With international search report.
Before the expiration of the time limit for amending the claims and to be republished in the event of the receipt of amendments.

(54) Title: UTILITY PANEL SYSTEM

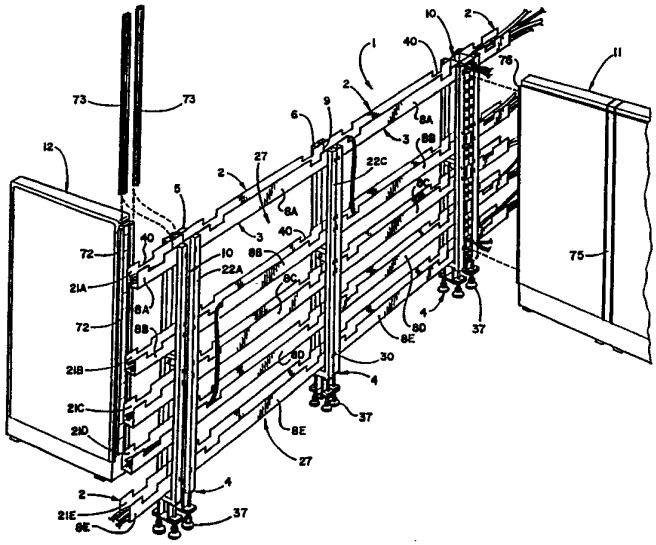

(57) Abstract

A utility panel system is provided for open office spaces, and the like. Each utility panel (2) has a relatively thick, skeleton-like frame (3), with a foot (4) and opposite sides (5, 6) shaped for interconnection with like panel frames to create a substantially free-standing utility panel system. Cover panels (7) are detachably connected to the opposite faces of each panel frame to enclose the same, and provide ready access to the panel interior. Horizontal utility troughs (8) extend continuously between the opposite sides of each panel frame in a vertically stacked relationship. The utility troughs (8) have open ends located at the opposite panel sides, and are positioned such that when adjacent utility panels are interconnected in a side-by-side relationship, the utility troughs are aligned to form multiple raceways. Panel connectors (10) are provided to connect the utility panels with one or more of a variety of existing partition panels, such that the utility panels act as a spine which supplies utilities to the existing partition panels.

FOR THE PURPOSES OF INFORMATION ONLY

Codes used to identify States party to the PCT on the front pages of pamphlets publishing international applications under the PCT.

AT	Austria	**ES**	Spain	**MG**	Madagascar
AU	Australia	**FI**	Finland	**ML**	Mali
BB	Barbados	**FR**	France	**MN**	Mongolia
BE	Belgium	**GA**	Gabon	**MR**	Mauritania
BF	Burkina Faso	**GB**	United Kingdom	**MW**	Malawi
BG	Bulgaria	**GN**	Guinea	**NL**	Netherlands
BJ	Benin	**GR**	Greece	**NO**	Norway
BR	Brazil	**HU**	Hungary	**PL**	Poland
CA	Canada	**IT**	Italy	**RO**	Romania
CF	Central African Republic	**JP**	Japan	**RU**	Russian Federation
CG	Congo	**KP**	Democratic People's Republic of Korea	**SD**	Sudan
CH	Switzerland			**SE**	Sweden
CI	Côte d'Ivoire	**KR**	Republic of Korea	**SN**	Senegal
CM	Cameroon	**LI**	Liechtenstein	**SU**	Soviet Union
CS	Czechoslovakia	**LK**	Sri Lanka	**TD**	Chad
DE	Germany	**LU**	Luxembourg	**TG**	Togo
DK	Denmark	**MC**	Monaco	**US**	United States of America

UTILITY PANEL SYSTEM

BACKGROUND OF THE INVENTION

The present invention relates to portable partition arrangements for open office spaces, and the like, and in particular to a utility panel system therefore.

Portable partition systems for open office spaces, and other similar settings, are well known in the art. Individual partition panels are interconnected in different configurations to form separate offices or workstations. The partition panels are extremely durable, and can be readily disassembled and reassembled into alternative configurations to meet the ever changing needs of the user. Examples of such partition systems are provided in U.S. Patent Nos. 3,822,146; 3,831,330; and 4,144,924, which are owned by Steelcase Inc., the assignee of the present application.

Most such partition panels are capable of being electrified in some fashion, so as to provide electrical power at the various workstations for computers, typewriters, dictating equipment, and other electrical appliances. These partition panels are also typically capable of routing cabling for telephones, computers, signaling, etc. to the individual workstations. Examples of such panel wiring systems are disclosed in U.S. Patent Nos. 4,429,934; 4,060,294; 4,228,834; 4,382,648. Wireways and/or raceways are normally provided within the interiors of the panels to carry the utilities throughout the panel system.

The space available in present panel systems for utility raceways is rather limited. This is particularly true of some of the older style partition panel systems. The advent of computerized workstations, with sophisticated communication systems, and other electronic support equipment has greatly increased the need for partition panels to carry more power and cabling throughout the panel system.

Since many users have already made a design commitment, as well as a substantial financial investment in a particular type of existing partition panel system, which panel system is otherwise fully functionable and operable, it would clearly be beneficial to be able to easily adapt each such existing panel

system for use in workstations having high intensity electrical requirements. Furthermore, it would also be highly beneficial to adapt such existing partition panel systems in a way that preserves their original aesthetic design theme or look, so as to avoid a cobbled or fragmented appearance.

SUMMARY OF THE INVENTION

One aspect of the present invention is to provide a utility panel system, wherein each panel has a relatively thick, skeleton-like frame, with a foot and opposite sides shaped for connection with like panel frames to create a substantially freestanding utility panel system. Cover panels are detachably connected to the opposite faces of the panel frame to enclose the same, and provide ready access to the panel interior. Horizontal utility troughs extend continuously between the opposite sides of the panel frame in a vertically stacked relationship. The utility troughs have open ends located at the opposite panel sides, such that when adjacent panels are interconnected in a side-by-side relationship, the utility troughs are aligned to form multiple raceways.

Panel connectors are preferably provided to connect the utility panels with one or more of a variety of existing partition panels, and thereby permit the utility panels to act as a spine which supplies utilities to the existing partition panels.

In another aspect of the present invention, each panel frame includes at least two vertical uprights positioned adjacent the ends of the utility troughs, which extend laterally outwardly thereof to avoid encroachment into the horizontal raceways, and simultaneously create at least one vertical raceway through the interior portion of the utility panel. Communication between the horizontal and vertical raceways permits utilities to be routed therebetween within the interior of the utility panel.

The principle objects of the present invention are to provide a utility panel system capable of providing increased power and cabling to the various workstations in an open

office arrangement. Each utility panel is relatively thick, with multiple horizontal troughs which align when adjacent utility panels are interconnected. Panel connectors are provided for the attachment of existing partition panels, such that the utility panels function as a spine to supply utilities to each string of partition panels, thereby extending the effective life of existing partition panel systems. The utility panels are preferably configured so that they are visually and functionally compatible with the existing partition system. Further, the utility panels and panel connectors are preferably universal in structure, such that the utility panel system can be readily adapted for use with a plurality of different types of partition panel systems. Removable panel surfaces facilitate ready access to the panel interiors to facilitate wiring and the like. An open, skeleton-like panel framework provides a very rigid, yet lightweight structure with sufficient interior space to house increased utilities, as well as to mount various equipment either partially or wholly within the confines of the panel. The utility panel has an uncomplicated design that can be easily and quickly assembled, is efficient in use, economical to manufacture, capable of a long operating life, and particularly well adapted for the proposed use.

These and other advantages of the invention will be further understood and appreciated by those skilled in the art by reference to the following written specification, claims and appended drawings.

BRIEF DESCRIPTION OF THE DRAWINGS

Fig. 1 is a perspective view of a utility panel system embodying the present invention, wherein utility panels, and existing partition panels are shown in a partially disassembled condition.

Fig. 2 is a perspective view of the utility panel system illustrated in Fig. 2, wherein the utility panels, and existing partition panels are shown in a fully assembled condition.

Fig. 3 is an exploded, perspective view of a utility panel.

Fig. 4 is a fragmentary, side elevational view of the utility panel.

Fig. 5 is a fragmentary, front elevational view of the utility panel.

Fig. 6 is a top plan view of a pair of utility panels directly interconnected in a side-by-side relationship.

Fig. 6A is a fragmentary, vertical cross-sectional view of the directly interconnected utility panels, taken along the line VIA-VIA of Fig. 6.

Fig. 7 is a top plan view of a pair of utility panels interconnected by an in-line panel connector.

Fig. 7A is a fragmentary, vertical cross-sectional view of the utility panels and in-line panel connector, taken along the line VIIA-VIIA of Fig. 7.

Fig. 8 is a top plan view of a pair of utility panels interconnected by a spacer panel connector.

Fig. 9 is a fragmentary, vertical cross-sectional view of the utility panels and spacer panel connector, taken along the line IX-IX of Fig. 8.

Fig. 10 is an exploded, perspective view of a utility panel and existing panel interconnected by a T-panel connector.

Fig. 11 is a top plan view of a pair of utility panels interconnected by a T-panel connector.

Fig. 12 is a top plan view of a pair of utility panels interconnected by an L-panel connector.

Fig. 13 is a fragmentary, perspective view of a second style existing partition panel.

Fig. 14 is a perspective view of a panel connector adapted for use in conjunction with the partition panel illustrated in Fig. 13.

Fig. 15 is a perspective view of a storage bin mounted on a utility panel.

Fig. 16 is a fragmentary, cross-sectional view of the storage bin attachment to the utility panel.

Fig. 17 is an exploded perspective view of a pair of utility panels interconnected with a partition panel by a T-panel connector.

Fig. 18 is a fragmentary, horizontal cross-sectional view of the utility panel, taken along the line XVIII-XVIII of Fig. 21.

Fig. 19 is a fragmentary, horizontal cross-sectional view of the utility panel, taken along the line XIX-XIX of Fig. 21.

Fig. 20 is an enlarged, fragmentary, vertical cross-sectional view of the utility panel, taken along the line XX-XX of Fig. 21.

Fig. 21 is a fragmentary, perspective view of a removable cover panel for the utility panel.

Fig. 22 is an exploded, perspective view of another embodiment of the utility panel.

Fig. 23 is a fragmentary, vertical cross-sectional view of a center cover panel portion of the utility panel illustrated in Fig. 22, taken along the line XXIII-XXIII of Fig. 22.

Fig. 24 is a fragmentary, perspective view of the center cover panel illustrated in Fig. 22.

Fig. 25 is a perspective view of a combination panel system incorporating the present invention.

Fig. 26 is a perspective view of yet another embodiment of the present invention.

Fig. 26A is a front elevational view of the Fig. 26 embodiment of the present invention.

Fig. 27 is an exploded, perspective view of the Fig. 26 embodiment of the present invention, wherein adjacent utility panels are interconnected by a hinged, in-line panel connector.

Fig. 28 is a fragmentary, horizontal cross-sectional view of the utility panels illustrated in Figs. 26 and 27.

Fig. 29 is a perspective view of the hinged, in-line panel connector illustrated in Figs. 26-28.

Fig. 30 is an exploded fragmentary perspective view of the utility panel illustrated in Figs. 26-27.

Fig. 31 is a perspective view of yet another embodiment of the present invention, wherein three utility panels are interconnected by a T-panel connector.

Fig. 32 is a fragmentary, horizontal cross-sectional view of the T-panel connector illustrated in Fig. 31.

Fig. 33 is a perspective view of yet another embodiment of the present invention, wherein four utility panels are interconnected by an X-panel connector.

Fig. 34 is a fragmentary, horizontal cross-sectional view of the X-panel connector illustrated in Fig. 33.

Fig. 35 is a front elevational view of yet another embodiment of the present invention.

DETAILED DESCRIPTION OF THE PREFERRED EMBODIMENTS

For purposes of description herein, the terms "upper", "lower", "right", "left", "rear", "front", "vertical", "horizontal", and derivatives thereof shall relate to the invention as oriented in Figs. 1-5. However, it is to understood that the invention may assume various alternative orientation and step sequences, except where expressly specified to the contrary. It is also to be understood that the specific devices and processes illustrated in the attached drawings, and described in the following specification are simply exemplary embodiments of the inventive concepts defined in the appended claims. Hence, specific dimensions and other physical characteristics relating to the embodiments disclosed herein are not to be considered as limiting, unless the claims expressly state otherwise.

The reference numeral 1 (Fig. 1) generally designates a utility panel system embodying the present invention. In the illustrated example, a plurality of individual utility panels 2 are provided, each having a relatively thick, skeleton-like frame 3, with a foot 4 and opposite sides 5 and 6 shaped for connection with like panel frames 3 to create a substantially freestanding utility panel system. Removable cover panels 7 (Figs. 2 and 3) are detachably connected to the opposite faces of each of the panel frames 3 to enclose the same, and provide ready access to the panel interior. Horizontal utility

troughs 8 (Fig. 1) extend continuously between the opposite sides 5 and 6 of each panel frame 3 in a vertically stacked relationship. The utility troughs 8 have open ends 9 located at the opposite panel sides 5 and 6, such that when adjacent utility panels 2 are interconnected in a side-by-side relationship, the utility troughs 8 are aligned to form multiple raceways in which various utilities can be carried. Panel connectors 10 are provided to connect the utility panels 2 with each other, and/or one or more of a variety of existing partition panels, such as the partition panels 11 and 12 illustrated in Fig. 1. In this configuration, utility panels 2 function as a spine which supplies utilities to strings of existing partition panels 11 and 12.

As will be appreciated by those skilled in the art, utility panel system 1 is particularly adapted to route a wide variety of different utilities to the individual workstations within the open office. In the present example, utility panel system 1 is particularly adapted to route electrical wiring, and the like, such as 110 volt and 220 volt power lines, signal cables, communication lines, and other similar wiring and cabling that is required to equip and support modern office equipment. However, it is to be understood that other forms of utilities, such as fluid pipes for water, cooling, gases, fuels and the like, as well as air conditioning ducts, and other related utilities can also be routed through the utility panel system 1, such that the term "utilities", as used herein, is intended to include all such facilities.

With reference to Figs. 3-6a, each utility panel 2 has a substantially similar construction, such that common reference numerals shall be used throughout for ease of description. Each utility panel 2 comprises an open skeleton-like frame 3 on which cover panels 7 are supported. A top cap 15 is provided to enclose and trim the upper portion of utility panel 2, and a base assembly 16 provides a utility power system along the lower portion of the utility panel 2, as described in greater detail hereinafter.

The illustrated panel frame 3 includes five separate utility channels or troughs 8a8e, each of which extends generally horizontally between the opposite sides 5 and 6 of utility panel 2. Utility troughs 8a-8e are arranged in a mutual parallel, vertically stacked relationship. Each utility trough 8a-8e has a generally U-shaped side elevational configuration adapted to receive and retain various utilities therein. Utility troughs 8a-e are substantially identical in construction, and include a base or web 18, with a pair of upstanding flanges 19 and 20 at opposite sides of web 18. Utility troughs 8a-e are relatively wide, in the nature of 2-3 inches, and deep around 3-4 inches, and form channel-shaped wireways or raceways 21a-e designed for maximum utility carrying capacity, without unnecessarily impinging upon the interior space of utility panel 2. Utility troughs 8a-e are extremely rigid, and in the illustrated example, are constructed from formed sheet metal. Utility troughs are preferably constructed extremely rigid so that they not only form secure raceways 22a-e, but also provide structural rigidity and support to the overall panel frame 3.

Four vertical uprights 22a-d are positioned adjacent the opposite ends of utility troughs 8a-e, and are shaped to support cover panels 7 thereon. Vertical uprights 22a-d are positioned at the exteriors of utility troughs 8a-e, and extend laterally outwardly therefrom to avoid encroachment into the horizontal utility raceways 21a-e, and simultaneously create two vertical raceways 27 on opposite sides of the interior of the associated utility panel 2. In the illustrated example, vertical uprights 22 are substantially identical in construction, and comprise a rigid, hollow extrusion or tube which has a substantially rectangular horizontal cross-sectional shape (Fig. 6), comprising front and rear faces 23 and 24, and interior and exterior side faces 25 and 26 respectively. The rear faces 24 of vertical uprights 22a-d are fixedly attached to the exterior surfaces of flanges 19 and 20 of each of the utility troughs 8a-e. In the example shown in Figs. 6 and 6A, the exterior side faces

26 of vertical uprights 22a-d are positioned in-line or flush with the ends 9 of the associated utility troughs 8a-e. Vertical uprights 22a-d and utility troughs 8a-e may be fixedly interconnected by a variety of different fastening techniques, and in the illustrated example are welded together. The rigid nature of both vertical uprights 22a-d and utility troughs 8a-e, as well as their rigid interconnection, creates a very strong and rigid open grid or skeleton-like frame 3, which does not require any auxiliary cross-bracing or the like, thereby maximizing the usable space within the interior of the utility panel 2.

In the example illustrated in Figs. 1-7A, each vertical upright 22a-d includes a plurality of hanger slots 30 extending through the front face 23 thereof into which hook shaped portions 64 of cover panels 7 are received, as described in greater detail hereinafter. Panel frame 3 includes three lateral connector brackets 31a-c disposed at the opposite ends of frame 2, which serve in interconnecting adjacent frames 3 in a side-by-side relationship. As best illustrated in Figs. 4 and 5, connector brackets 31a-e have a rectangular tubular construction similar to vertical uprights 22a-d, and extend laterally inbetween the oppositely facing vertical uprights 22a-b and 22c-d respectively, with opposite ends fixedly attached thereto. The lowermost connector bracket 31b is positioned at the lower ends of vertical uprights 22, the uppermost connector bracket 31a is positioned directly below the uppermost utility trough 8a, and the medial connector bracket 31c is positioned inbetween utility troughs 8b and 8c. Each connector bracket 31a-c includes a fastener aperture 32 which extends laterally through the connector bracket in a direction parallel with the opposite faces of utility panel 2.

Each panel frame 3 also includes a dual glide foot assembly 4 attached to the lower ends of vertical uprights 22a-d at the opposite sides of utility panel 2. With reference to Figs. 4 and 5, each panel foot assembly 4 includes a pair of C-shaped brackets 35 having their upper

ends fixedly attached to the lower ends of vertical uprights 22a-d, and their lower ends interconnected by a rigid strap 36. Each side of the foot assembly 4 includes a pair of threaded apertures in which glide feet 37 are threadedly received. Axial rotation of glide feet 37 with respect to foot brackets 35 adjusts the relative height of panel frame 3. By providing each foot assembly 4 with a pair of vertically adjustable glide feet 37, utility panel 2 has good freestanding support, and the angular orientation of the utility panel with respect to the floor surface can be readily adjusted.

Each of the illustrated utility troughs 8a-e (Fig. 3) includes two pairs of notches or cutouts 40 extending through the upper edges of channel flanges 19 and 20. The flange notches 40 are positioned generally adjacent to the opposite ends of the utility troughs 8a-e, and are shaped to permit wires and/or other utilities to be pulled out from the associated utility trough, and routed into and through one of the vertical raceways 27. In this manner, wires, or the like can be easily brought to a service point at various vertical heights along utility panel 2, or routed through a different one of the utility troughs 8a-e, as best illustrated in Fig. 1. A raceway cover 41 (Fig. 3) may be used to enclose one or more of utility troughs 8, and has an inverted U-shaped configuration, having a central web 43, and depending flanges 44 along opposite sides thereof. The flanges 44 of raceway cover 41 are spaced so as to closely receive the opposite flanges 19 and 20 of utility troughs 8a-e therein to form a secure, closed raceway 21. The illustrated cover 41 includes notches 45 through side flanges 44, which align with the associated notches 40 in utility troughs 8a-e to permit wires to be routed into and through the vertical raceways 27.

The base assembly 16 (Figs. 3-5) serves to enclose that portion of panel frame 3 disposed below the lowermost utility trough 8e, and comprises an upwardly facing, U-shaped base channel 50, with a pair of removable covers 51 and 52. Base channel 50 includes a flat web 53 which extends along the

floor surface, and a pair of upstanding, flexible flanges 54, which serve as light seals along the base of utility panel 2. Glide feet 35 protrude through apertures in base web 53 to engage the floor directly. The base side covers 51 and 52 are detachable connected with panel frame 3, and enclose that portion of the panel frame disposed between the light seal flanges 54 and the lowermost edge of cover panels 7. Side covers 51 and 52 are manually removable with a snap fastener, or the like, so as to readily access any utilities placed therein, such as the illustrated powerway 56. Powerway 56 is the subject copending U.S. patent application Serial No. 377,892 filed July 10, 1989, entitled Modular Powerway For Partition Panels and the Like, which is assigned to the assignee of the present application, and is hereby incorporated herein by reference. However, it is to be understood that other types of powerways, and/or wiring systems can also be used in conjunction with utility panel 2.

Cover panels 7 (Figs. 3-5) serve to cover the opposite faces of panel frame 3. In the illustrated example, each face of panel frame 3 includes three separate removable cover panels, comprising an upper cover panel 7a, a lower cover panel 7b, and intermediate cover panel 7c. Cover panels 7a-7c have a generally similar construction, comprising a rigid, pan-shaped inner panel 58 constructed of formed sheet metal or the like, comprising a flat front face 59, and inwardly bent marginal edges 60-63. In the cover panels 7a-c shown in Figs. 3-5, hook shaped tabs or fasteners 64 are mounted on the side edges 62 and 63 of inner panel 58, and are shaped to be received within the hanger slots 30 of vertical uprights 22a-d. A fabric, or other similar cover layer 65 may be attached to the exterior of inner panel 58, and drawn around the marginal edges 60-63 thereof, so as to present a neat finished exterior appearance. Adhesive, or other similar fastening means may be used to attach the cover layer 65 to inner panel 58.

Each of the cover panels 7a-c illustrated in Fig. 6, is shaped so that the side edges 62 and 63 are positioned

substantially flush with the exterior side faces 26 of vertical uprights 22a-d. In this manner, when adjacent utility panels 2 are directly interconnected in a side-by-side relationship, as shown in Figs. 6 and 6A, the side edges 60 and 61 of cover panel 7a-c will abut. The upper and lower edges 62 of each of the cover panels 7a-c are spaced apart selected distances in accordance with the spacing of utility troughs 8a-e, and/or location of hanging furniture articles. In the illustrated example, the upper cover panel 7a has a height selected such that its upper edge 60 is generally flush with the upper ends of vertical uprights 22a-d, while its lower edge 61 is positioned generally flush with the bottom of utility trough 8b. The lower cover panel 7b has its lower edge 61 positioned substantially coplanar with the uppermost edge of base cover 51, and its upper edge 60 positioned substantially coplanar with the top of utility trough 8c. Intermediate cover panel 7c, has its upper and lower edges 60 and 61 positioned to abut the lower edge 61 of upper panel 7a, and the upper edge 60 of lower panel 7b, respectively. In the example shown in Fig. 3, the upper edge 60 of intermediate panel 7c is disposed substantially coplanar with the bottom of utility trough 8b, and its lower edge 61 positioned substantially coplanar with the top of utility trough 8c. In this manner, removal of upper cover panel 7a provides ready access to utility troughs 8a and 8b, removal of lower cover panel 7b provides ready access to utility troughs 8d and 8e, and removal of intermediate cover panel 7c provides access to center utility trough 8c.

Adjacent utility panels 2 are adapted to be interconnected in a side-by-side relationship in a number of different fashions, as required by a particular installation. In the embodiment illustrated in Figs. 6 and 6A, adjacent utility panels 2 are directly interconnected, with the exterior faces 26 of adjacent vertical uprights 22a-d abutting one another. The two centermost utility panels 2 illustrated in Fig. 1 are directly interconnected in this fashion. In this embodiment, through bolts 68 (Figs. 6 & 6A) are inserted

through the apertures 32 of each adjacent pair of connector brackets 31a-c. A nut 69 is threaded onto the free end of each bolt 68, and tightened, so that adjacent utility panels 2 are securely interconnected in the illustrated flush relationship. This type of flush interconnection can be used when it is not necessary to hang furniture articles from the utility panels 2. When utility panels 2 are interconnected in the flush relationship discussed above, the ends 9 of adjacent utility troughs 8a-e are aligned and in sufficiently close proximity to form a substantially continuous raceway throughout the utility panel system 1.

Alternative techniques for interconnecting adjacent utility panels 2 are illustrated in Figs. 7-17 wherein different style panel connectors 10 are used, particularly when utility panels 2 are used as a spine to feed strings of existing partition panels, such as the illustrated partition panels 11 and 12. In the example illustrated in Fig. 1, partition panels 11 and 12 represent two different styles of existing partition panels that are presently manufactured and sold by Steelcase Inc., assignee of the present application. Partition panel 12 is a partially schematic illustration of a panel manufactured and sold by Steelcase Inc. under the "Series 9000" trademark, additional details of which are disclosed in U.S. patents 4,144,924 and 4,203,639, as identified in Applicant's associated Information Disclosure Statement. In general, each of the "Series 9000" partition panels 12 includes a two-piece bracket 72 mounted along both side edges thereof in which flexible hinge strips 73 are received and retained. The use of a single hinge strip 73 to interconnect adjacent "Series 9000" panels permits the 12 partition panels to be rotated with respect to one another, whereas the use of two hinge strips 73 interconnects adjacent "Series 9000" panels in a fixed in-line condition.

A different style partition panel is indicated by the reference numeral 11, and in the illustrated example, comprises a panel manufactured and sold by Steelcase Inc. under the "Valencia" trademark, additional details of which

are apparent from the Applicant's associated Information Disclosure Statement. Unlike the flexible hinge connector arrangement incorporated into the "Series 9000" panel system discussed above, the ""Valencia"" panel system employs separate connector posts 75 to interconnect adjacent partition panels 11. Each "Valencia" brand partition panel has a pair of windowed brackets 76 (Fig. 14) attached to the opposite sides thereof, and the connector posts 75 have a mating tab bracket 77, which interlocks with the windowed bracket 76, as described in greater detail hereinafter. The "Valencia" connector post rigidly interconnects adjacent partition panels 11 in either an in-line, "T", or "X" configuration.

It is to be understood that while utility panel system 1 is disclosed herein for use in conjunction with Steelcase "Series 9000" and "Valencia" brand partition panels 11 and 12, it is equally applicable to other types of partition systems, including those associated with panel manufacturers other than Steelcase Inc.

The panel connector 10 illustrated in Figs. 7 and 7A is particularly designed for interconnecting utility panels 2 that are used in conjunction with Steelcase "Series 9000" brand partition panels 12. The illustrated in-line panel connector is designated by the reference numeral 80, and in general comprises two pairs of brackets 81 and 82, which are shaped to be fastened to the rear faces 24 of vertical uprights 22a-d by suitable fastening means, such as the illustrated bolts 83. As best illustrated in Fig. 10, brackets 81 and 82 have a generally L-shaped top plan configuration, and are elongate, extending generally along the entire side of utility panel frame 3. Each bracket 81 and 82 has a two-part construction, with a channel 84 formed inbetween the outer and inner bracket halves 81a and 81b at the outwardly extending flange 85 thereof, which is shaped similar to the bracket 72 in the "Series 9000" panels so as to receive a flexible hinge 73 therein. The opposite flange 86 and bracket 84 includes cut out notches 87 in which the ends 9 of utility troughs 8a-e are received, and apertures 88 through

which the fastener bolts 83 extend to mount the brackets 81 and 82 to the vertical uprights 22a-d. Three spacer blocks 89 are also provided, and are positioned between the three connector brackets 31a-c of panel frame 3. Each connector block 89 includes a longitudinally extending aperture 90 in which through bolts 68 are received, as best illustrated in Figs. 7 and 7A. Connector blocks 89 fill in the space or gap formed between the ends 9 of adjacent utility troughs 8a-e, so that the raceway 21 has a substantially continuous construction. Two flexible hinges 73 (Fig. 7) interconnect both pairs of brackets 81 and 82, and thereby create a visual appearance very similar to that of the "Series 9000" panels 12 to maintain a uniform design theme.

An in-line spacer connector 94 is illustrated in Fig. 8 and 9, and is somewhat similar to the in-line connector 80 described above. Spacer connector 94 is also adapted to be used in conjunction with utility panels 2 that are to be interconnected with "Series 9000" panels 12, and includes two pairs of brackets 95 and 96, which are substantially identical to the brackets 81 and 82 of in-line connector 80. Bolts 97 attach the interior flanges 98 of brackets 95 and 96 to the rear faces 24 of vertical uprights 22a-d. The exterior flanges 99 of brackets 95 and 96 each carry a channel 100 in which one of the side beads of flexible hinge 73 is received, and a series of slots 101 in which furniture articles, such as the binder bin 108 illustrated in Fig. 15, may be hung. Three connector blocks 102, somewhat longer than connector blocks 89, are provided to span the distance between the three connector brackets 31a-c of adjacent utility panels 2. Each connector block 102 includes two threaded apertures 103 in which mounting bolts 104 are threadedly secured. A pair of filler posts 105 are positioned inbetween brackets 95 and 96, and include a generally flat outer surface 106 designed to mate aesthetically with the exterior appearance of utility panels 2. Each filler post 105 includes a plurality of inwardly facing, U-shaped clips 107 attached to the interior face thereof, in which the side edges of connector blocks 102

are received to secure filler post 105 in place. In the illustrated example, U-shaped clips 107 have a snap lock detent which mates with associated recesses in the connector blocks 102 to securely, yet removably retain the filler posts 105 in place.

A T-panel connector 110 is illustrated in Fig. 11, and incorporates parts identical to those already described hereinabove. More specifically, T-panel connector 110 includes two pairs of brackets 111 and 112, which are substantially identical to previously described brackets 81-82 and 95-96. Three connector blocks 113, identical to connector blocks 102, extend between the three connector brackets 31a-c of adjacent panel frames 3, and are securely interconnected thereto by bolts 114. A single filler post 115, identical to one of the filler posts 105, is mounted on one side of the adjacent utility panels 2, and a pair of flexible hinges 73 attach a standard "Series 9000" panel 12 to the bracket pair 111 on the opposite side of utility panels 2.

An L-panel connector 120 is illustrated in Fig. 12, and is adapted to interconnect two adjacent utility panels 2 in a 90 degree configuration. L-panel connector 120 includes a generally L-shaped frame 121 with two pairs of brackets 122 and 123, similar to brackets 81 and 82 attached to the opposite flanges thereof. U-shaped clips 124 are received over the connector brackets 31a-c of adjacent vertical uprights 22a-e, and include bolts 125 to securely interconnect the same. A single, flexible hinge 73 interconnects the bracket pair 123 on the interior side of the utility panels 2, while an L-shaped cover 126 extends between and encloses the free ends of connector frame 121.

An alternative T-panel connector 77 is illustrated in Figs. 13 and 14, and is particularly adapted for interconnecting two utility panels 2 with a "Valencia" style partition panel 11 in a T-configuration. The "Valencia" T-panel connector 77 comprises a central fastener web 131, having a pair of L-shaped channels 132 and 133 fixedly interconnected along opposite sides thereof. The connector

channels 132 and 133 include fastener apertures 134 through which fasteners are inserted to attach the connector 77 to the rearward faces 24 of adjacent vertical uprights 22a & c and 22b & d respectively, in a fashion substantially identical to the attachment of connector 80, as described above. In a T-configuration, a cover panel (not shown) is positioned over the connector 77 that is not attached to a partition panel 11. The web 131 of connector 130 carries outwardly protruding tabs 135 which are matingly received through windows 136 in the connector bracket 76 of an adjacent "Valencia" panel 11. A collar 137 is mounted at the upper end of web 131, and is engagingly received by an enlarged portion 138 of a lock bolt 139 on "Valencia" panel 12. Windows 140 are formed through the web 131 of connector 77, and are positioned for alignment with the utility troughs 8a-e of an associated utility panel 2, such that the utilities, such as wires, and the like can be routed from the utility troughs 8a-e of the associated utility panel 2 through bracket windows 140, and into the interior of "Valencia" panel 12.

As best illustrated in Figs. 1 and 2, utility panels 2 are particularly adapted to be interconnected in an in-line relationship using either a flush type connection (Fig. 6-6A), or one of the panel connectors 10 to form a central spine from which strings of partition panels 11 and 12 T-off in a 90 degree orientation. The additional utility carrying capability of the utility panels 2 thereby greatly increases the effective life and operation of the existing panels 11 and 12 by adapting them for use in electrically intensive workstations. Also, the fact that different panel connectors 10 can be attached to the same utility panel 2, lends universal functionality to the utility panel system 2 and adapts the same for use with a wide variety of different types of partition systems. The different panel connectors 10 not only account for the different fastening techniques used to interconnect various partition panels, but they also replicate the outward appearance of the particular panel system, so that the utility panels 2 blend in visually as well as

functionally. Superior distribution and management of communications, signal cabling and electrical power, network connections, as well as HVAC is also achieved by permitting the utility panels 2 to carry the major burden or load of the utilities.

Fig. 17 illustrates a pair of utility panels 2 interconnected with a "Series 9000" panel 12 in a "T" configuration. An alternative filler post 144 is illustrated for use in conjunction with thinner partition panels, as well as an associated top cap 145 to enclose the upper portion of the joint. A standard style top can 146 is also illustrated for use in conjunction with filler post 105. An end cap 146 is provided to cover the end of utility panel 2 in an end-of-run condition, and has a construction generally similar to filler post 105. The intermediate cover panel 7c illustrated in Fig. 17 includes a flexible accessway disposed along the lower edge 61 thereof. In the illustrated example, the lower edge 61 of cover panel 7b includes an elongate notch 148 which is selectively closed by a flexible strip 149, in nature of a brush or bristle, which is mounted immediately behind notch 148 by a clip 150 (Fig. 21). Flexible strip 149 permits wires to be easily drawn out from utility trough 8c, while maintaining a neat, closed appearance.

As best illustrated in Fig. 22, intermediate cover panels 7c may also have a second notch 153 and associated flexible strip 154 disposed along the upper edge 60 thereof. In this fashion, wires and/or other utilities can be easily drawn from utility trough 7b through the upper notch 153 and associated flexible strip 154.

Also illustrated in Fig. 22 is an optional top power-in channel assembly 157, which includes an end channel 158 that mounts with bolts (not shown) along one side of utility panel 2, and includes a closure cap 159, or an alternative top power-in extender tube 160. The utility panel 2 illustrated in Fig. 22 also includes an alternative top panel assembly or clerestory 162, which mounts to the top of utility panel 2,

and can be used to extend the overall height of the utility panel.

Fig. 25 illustrates a combination of utility panels 2 and "Series 9000" panels 12 that includes a mating door frame 163, hanging binder bins 108, and freestanding furniture 164.

Fig. 26-34 illustrate yet another embodiment of the present invention, wherein utility panels 2' are arranged in a spine configuration with different height "Series 9000" partition panels 12'. Since the alternative utility panel arrangement 1' is similar to the previously described utility panel system 1, similar parts appearing in Figs. 1-25 and Figs. 26-34 respectively are represented by the same, corresponding reference numeral, except for the prime suffix in the numerals of the latter.

In utility panel system 1', adjacent utility panels 2' are arranged in an in-line spine configuration, with "Series 9000" panel connected thereto by T-connectors 110'. As best illustrated in Figs. 26 and 26A, the lower cover panels 7b' of utility panels 2' have a two-part construction, comprising an outer cover panel 165, having an inverted U-shaped front elevational configuration, and an inner cover panel 166 mounted within the outer cover panel 165. Both cover panels 165 and 166 are detachably connected with the panel frame 3', and can be independently removed therefrom. Inner cover panel 166 is shaped such that it can be removed from panel frame 3', even when a worksurface is hung in place on utility panel 2'. This arrangement permits quick and easy rearrangement of utilities within utility panel 2'. The opposite, or aisle side (not shown) of utility panel 2', preferably has three plain cover panels 7', similar to the cover panels 7a-c illustrated in Fig. 3.

With reference to Fig. 26, the illustrated top power-in assembly 157' includes a separate, enclosed power raceway 177 which extends downwardly through extender 160' and end cap 158' into the base 16' of the associated utility panel 2' to provide electrical power to the system. A pair of top

cable-in assemblies 178 are provided on two other utility panels 2' to route cabling throughout utility panel system 1'.

As best illustrated in Figs. 27-29, in utility panel 2', the pairs of connector brackets 81' and 82' are formed in one-piece (hereinafter designated 81') with the inner halves 81a" of the brackets welded to the vertical uprights 22a'-d' of panel frame 3'. The exterior portions 81b' of brackets 81' are bolted to the interior portions 81a' thereof, and are in turn interconnected by a pair of flexible hinges 73'. Connector brackets 81' include a plurality of windows 168 in both halves arranged to be aligned with the utility troughs 8a'-e'. Cover panels 7' are attached to the associated panel frames 3' with spring clips 167 (Fig. 28), which permit removal of the cover panels 7' with a direct horizontal motion, thereby eliminating the need for clearance at the top and/or bottom of the cover panel for removal purposes.

As best illustrated in Fig. 30, the base assembly 16' of utility panel 2' is fully enclosed, and includes a bottom tray 170 enclosed by base cover panels 51' and 52'. Also, the utility troughs 8a'-e' (Fig. 27) of utility panel 2' are preferably spaced more than six inches apart to meet high level security requirements, especially with respect to eavesdropping, and other similar shielding problems.

Figs. 31 and 32 illustrate interconnecting three utility panels 2' in a T-configuration, using a T-connector 172. Each utility panel 2' has an innerbracket 81a' welded along the side edge thereof, with an associated outer bracket 81b' which form channels 100' in which flexible hinges 73' are received. An elongate cover 173 is mounted along the open side of the joint to enclose the same.

Figs. 33 and 34 illustrate interconnecting four utility panels 2' in an X-configuration, using an X-connector 175. X-connector 175 is substantially identical to T-connector 172, except for the addition of an extra set of brackets 81' at the open side of the connector.

Fig. 35 illustrates yet another embodiment of the present invention, wherein utility troughs 8b' and 8c' are detachably mounted within the associated panel frame 3'. In this manner, utility troughs 8b' and 8c' can be removed from frame 3', and the cover panels 7' reconfigured to create a window or pass through 177 area in utility panel 2'.

In the foregoing description, it will be readily appreciated by those skilled in the art that modifications may be made to the invention without departing from the concepts disclosed herein. Such modifications are to be considered as included in the following claims, unless these claims by their language expressly state otherwise.

CLAIMS

-1-

In a partition system for open office spaces, and the like, of the type including a plurality of freestanding, portable partition panels detachably interconnected on a floor surface in a selected configuration, the improvement of a utility panel therefor, comprising:

a panel frame having opposite faces, a foot portion adapted to abuttingly support said utility panel on the floor surface, and opposite sides shaped for operable connection with the opposite sides of an adjacent, like panel frame to create a substantially freestanding utility panel system;

at least one cover panel shaped to cover at least a portion of one of the faces of said panel frame, and being detachably connected therewith to provide ready access to an interior portion of said utility panel;

at least one utility trough shaped to receive and retain utilities therein, and extending continuously between the opposite sides of said panel frame in a substantially horizontal orientation; said utility trough having generally open ends positioned adjacent the opposite sides of said panel frame, and located such that when adjacent panels are interconnected in a side-by-side relationship, the open ends of adjacent utility troughs are aligned to form a horizontal raceway which extends throughout the partition system;

at least one panel connector having a first portion thereof connected with one side of said panel frame, and a second portion thereof with means for detachable connection with one of said partition panels; said panel connector being configured so as to permit utilities in said utility panel to be fed into said one partition panel, whereby said utility

-23-

panel functions as a spine which supplies utilities to said partition panels.

-2-

A partition system as set forth in claim 1, wherein:

said panel frame includes first and second vertical uprights respectively positioned adjacent the ends of said utility trough, and shaped to support said cover panel thereon; said vertical uprights being located exterior to said utility trough, and extending laterally outwardly thereof to avoid encroachment into said horizontal raceway, and simultaneously create at least one vertical raceway through the interior portion of said utility panel.

-3-

A partition system as set forth in claim 2, including:

means for communicating said horizontal raceway with said vertical raceway, whereby utilities can be routed therebetween within the interior portion of said utility panel.

-4-

A partition system as set forth in claim 3, wherein:

said vertical uprights and said associated utility trough are fixedly interconnected to form an open, skeleton-like structure which defines said panel frame.

-5-

A partition system as set forth in claim 4, wherein:

said panel frame includes a second utility trough fixedly connected with said vertical uprights, and extending continuously between the opposite sides of said panel frame in a substantially horizontal orientation at a vertical elevation spaced a predetermined distance from said first-named utility trough.

-6-

A partition system as set forth in claim 5, wherein:

said panel frame further includes third and fourth vertical uprights fixedly connected to said first and second utility troughs, and being positioned adjacent the ends of said utility troughs, laterally opposite said first and second

uprights, such that both faces of said utility panel have two vertically uprights and a vertical raceway associated therewith.

-7-

A partition system as set forth in claim 6, wherein:

a plurality of said cover panels are detachably connected with each of said vertical uprights, and substantially enclose both of the faces of said utility panel.

-8-

A partition system for open office spaces, and the like, comprising:

a plurality of freestanding, portable partition panels adapted to be supported on a floor surface;

means for detachably interconnecting said partition panels into a selected configuration;

at least two utility panels, each including:

a panel frame having opposite faces, a foot portion adapted to abuttingly support said utility panel on the floor surface, and opposite sides shaped for operable connection with the opposite sides of an adjacent, like panel frame to create a substantially freestanding partition system;

at least one cover panel shaped to cover at least a portion of one of the faces of said panel frame, and being detachably connected with said panel frame to provide ready access to an interior portion of said utility panel;

at least one utility trough shaped to receive and retain utilities therein, and extending continuously between the opposite sides of said panel frame in a substantially horizontal orientation; said utility trough having generally open ends positioned adjacent the opposite sides of said panel frame, and located such that when adjacent panels are interconnected in a side-by-side

relationship, the open ends of adjacent utility troughs are aligned to form a horizontal raceway which extends throughout the partition system;

at least one panel connector having a first portion thereof connected with one side of one of said utility panel frames, and a second portion thereof supporting one of said detachable interconnecting means for connection with one of said partition panels; said panel connector being configured so as to permit utilities in said utility panels to be fed into said one partition panel, whereby said utility panels function as a spine which supplies utilities to said partition panels.

-9-

A partition system as set forth in claim 8, wherein:

each said panel frame comprises first and second vertical uprights respectively positioned adjacent the ends of said utility trough, and shaped to support said cover panel thereon; said vertical uprights being located exterior to said utility trough, and extending laterally outwardly thereof to avoid encroachment into said horizontal raceway, and simultaneously create at least one vertical raceway through the interior portion of said utility panel.

-10-

A partition system as set forth in claim 9, including:

means for communicating said horizontal raceway with said vertical raceway, whereby utilities can be routed therebetween within the interior portion of said utility panels.

-11-

A partition system as set forth in claim 10, wherein:

said vertical uprights and said associated utility trough are fixedly interconnected to form an open, skeleton-like structure which defines each said utility panel frame.

-12-

A partition system as set forth in claim 11, wherein:

each said panel frame includes a second utility trough fixedly connected with said vertical uprights, and extending

continuously between the opposite sides of said panel frame in a substantially horizontal orientation at a vertical elevation spaced a predetermined distance from said first-named utility trough.

-13-

A partition system as set forth in claim 12, wherein:

each said panel frame further comprises third and fourth vertical uprights fixedly connected to said first and second utility trough, and being positioned adjacent the ends of said utility troughs, laterally opposite said first and second uprights, such that both of said panel faces have two vertically uprights and a vertical raceway associated therewith.

-14-

A partition system as set forth in claim 13, wherein:

a plurality of said cover panels are detachably connected with each of said vertical uprights, and substantially enclose both of the faces of each of said utility panels.

-15-

A freestanding, portable utility panel for open office spaces, and the like, comprising:

a panel frame having opposite faces, a foot portion adapted to abuttingly support said panel on a floor surface, and opposite sides shaped for direct connection with the opposite sides of an adjacent panel frame to create a substantially freestanding utility panel system;

at least one cover panel shaped to cover at least a portion of one of the faces of said panel frame, and being detachably connected with said panel frame to provide ready access to an interior portion of said utility panel;

at least one utility trough shaped to receive and retain utilities therein, and extending continuously between the opposite sides of said panel frame in a substantially horizontal orientation; said utility trough having generally open ends positioned adjacent the opposite sides of said panel frame, and located such that when adjacent utility panels are interconnected in a side-by-side relationship, the open ends

of adjacent utility troughs are aligned and in close proximity to form a substantially uninterrupted horizontal raceway which extends continuously throughout the panel system.

-16-

A utility panel as set forth in claim 15, wherein:

said panel frame comprises first and second vertical uprights respectively positioned adjacent the ends of said utility trough, and shaped to support said cover panel thereon; said vertical uprights being located exterior to said utility trough, and extending laterally outwardly thereof to avoid encroachment into said horizontal raceway, and simultaneously create at least one vertical raceway through the interior portion of said panel.

-17-

A utility panel as set forth in claim 16, including:

means for communicating said horizontal raceway with said vertical raceway, whereby utilities can be routed therebetween within the interior portion of said panel.

-18-

A utility panel as set forth in claim 17, including:

a panel connector having a first portion thereof connected with one side of said panel frame, and a second portion thereof supporting a fastener mechanism shaped for detachable connection with an existing partition panel; said panel connector being configured so as to permit utilities in said utility panel to be fed into the existing partition panel, whereby said utility panel functions as a spine which supplies utilities to existing partition panels.

-19-

A utility panel as set forth in claim 18, including:

a plurality of said panel connectors, each having a different style fastener mechanism for detachable connection with different types of existing partition panels, whereby said utility panel is universally adaptable for use with each.

-20-

A utility panel as set forth in claim 19, wherein:

-28-

said foot portion of said panel frame comprises two pairs of glide feet mounted at lower ends of said vertical uprights.

-21-

A utility panel as set forth in claim 20, wherein:

said vertical uprights and said utility trough are fixedly interconnected to form an open, skeleton-like structure which defines said panel frame.

-22-

A partition panel as set forth in claim 21, wherein:

said panel frame includes a second utility trough fixedly connected with said vertical uprights, and extending continuously between the opposite sides of said panel frame in a substantially horizontal orientation at a vertical elevation spaced a predetermined distance from said first-named utility trough.

-23-

A partition panel as set forth in claim 22, wherein:

said panel frame further comprises third and fourth vertical uprights fixedly connected to said first and second utility trough, and being positioned adjacent the ends of said utility troughs, laterally opposite said first and second uprights, such that both of said panel faces have two vertically uprights and a vertical raceway associated therewith.

-24-

A partition panel as set forth in claim 23, wherein:

a plurality of said cover panels are detachably connected with said vertical uprights, and substantially enclose both of the faces of said utility panel.

-25-

A partition panel as set forth in claim 24, wherein:

said vertical uprights each include thereon means for detachably connecting the same with an associated vertical upright of an adjacent utility panel.

-26-

A partition panel as set forth in claim 25, including:

-29-

first and second hanger strips adapted to detachably mount furniture articles thereon; and

means for detachably connecting said hanger strips with said vertical uprights, such that different style hanger strips and associated furniture articles can be supported on said utility panel.

-27-

A partition panel as set forth in claim 26, wherein:

at least one of said cover panels includes a removable center portion which permits access to the panel interior, without removal of any of the associated furniture articles.

-28-

In a freestanding, portable partition system for open office spaces, and the like, the improvement comprising:

at least first and second partition panels, each including:

a panel frame having opposite faces, a foot portion adapted to abuttingly support said panel on a floor surface, and opposite sides;

at least one cover panel shaped to cover at least a portion of one of the faces of said panel frame, and being detachably connected with said panel frame to provide ready access to an interior portion of said panel;

at least one utility trough shaped to receive and retain utilities therein, and extending continuously between the opposite sides of said panel frame in a substantially horizontal orientation; said utility trough having generally open ends positioned adjacent the opposite sides of said panel frame, and located such that when said first and second partition panels are interconnected in a side-by-side relationship, the open ends of adjacent utility troughs are aligned and in close proximity;

-30-

means for directly interconnecting the sides of said first and second partition panels, whereby said adjacent utility troughs form a substantially uninterrupted horizontal raceway which extends continuously through said first and second partition panels.

-29-

A freestanding, portable partition panel for open office spaces, and the like, comprising:

a panel frame having opposite faces, a foot portion adapted to abuttingly support said panel on a floor surface, and at least one utility raceway extending between opposite sides of said panel frame in a substantially horizontal orientation to receive and retain utilities therein; said panel frame including first and second vertical uprights positioned in a laterally spaced apart relationship; being located exterior to said utility raceway, and extending laterally outwardly thereof to avoid encroachment into said horizontal raceway, and simultaneously creating at least one vertical raceway through the interior portion of said panel; and

at least one cover panel shaped to cover at least a portion of one of the faces of said panel frame, and being detachably connected with said panel frame to provide ready access to said vertical raceway.

-30-

In a freestanding, portable partition system for open office spaces, and the like, the improvement comprising:

at least first and second partition panels, each including:

a panel frame having opposite faces, a foot portion adapted to abuttingly support said panel on a floor surface, opposite sides, and at least one utility raceway extending between opposite sides of said panel frame in a substantially horizontal orientation to receive and retain utilities therein; said panel frame including first and second vertical uprights positioned in a laterally spaced apart relationship; being located exterior to said utility raceway, and extending

laterally outwardly thereof to avoid encroachment into said horizontal raceway, and simultaneously creating at least one vertical raceway through the interior portion of said panel;

at least one cover panel shaped to cover at least a portion of one of the faces of said panel frame, and being detachably connected with said panel frame to provide ready access to said vertical raceway; and

means for directly interconnecting the sides of said first and second partition panels, whereby said adjacent utility troughs form a substantially uninterrupted horizontal raceway which extends continuously through said first and second partition panels.

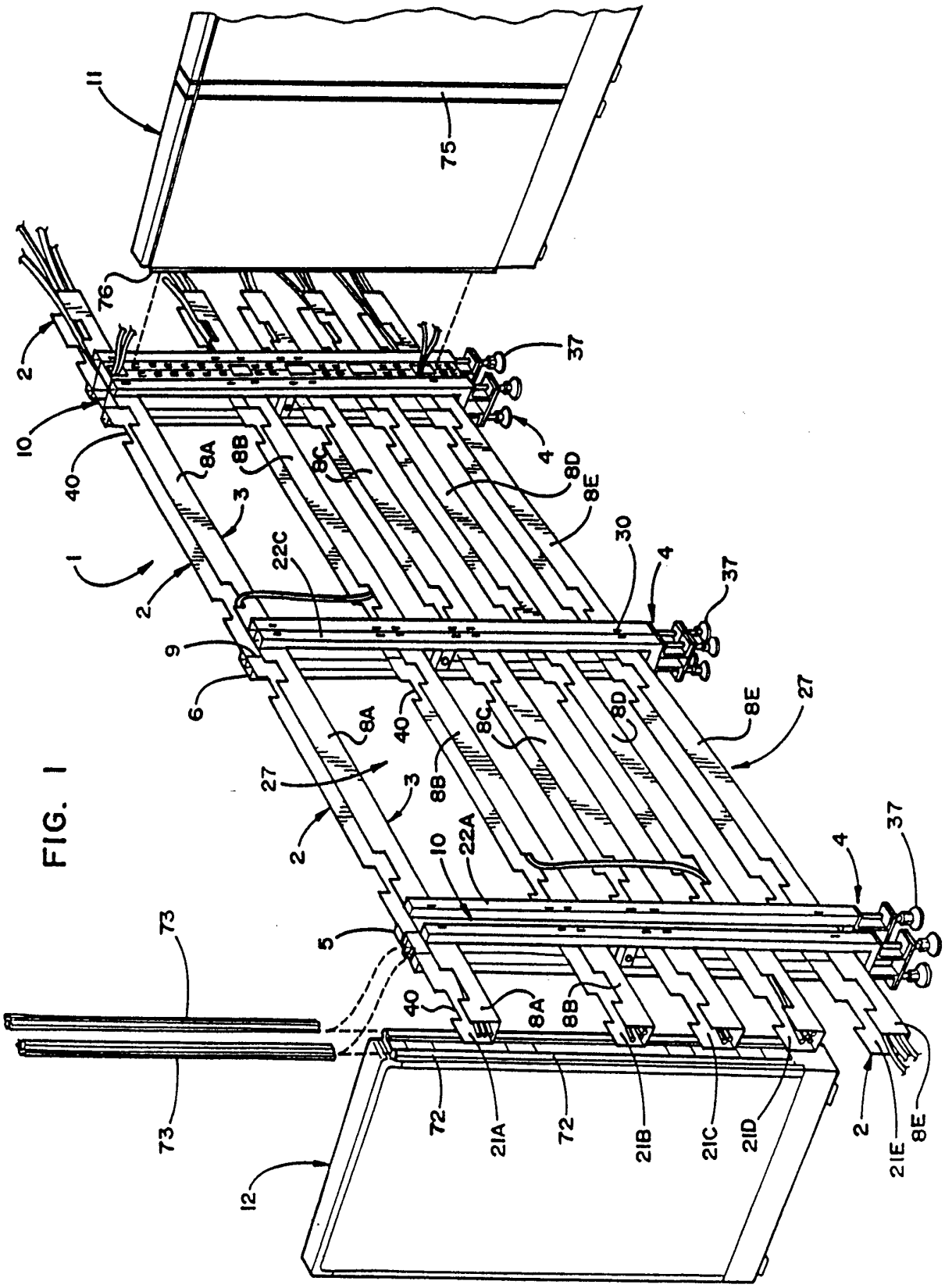
11
75
76
2
10
40
8A
8B
8C
8D
8E
3
37
4
30
22C
1
9
6
27
22A
5
73
72
21A
21B
21C
21D
21E
12

FIG. 1

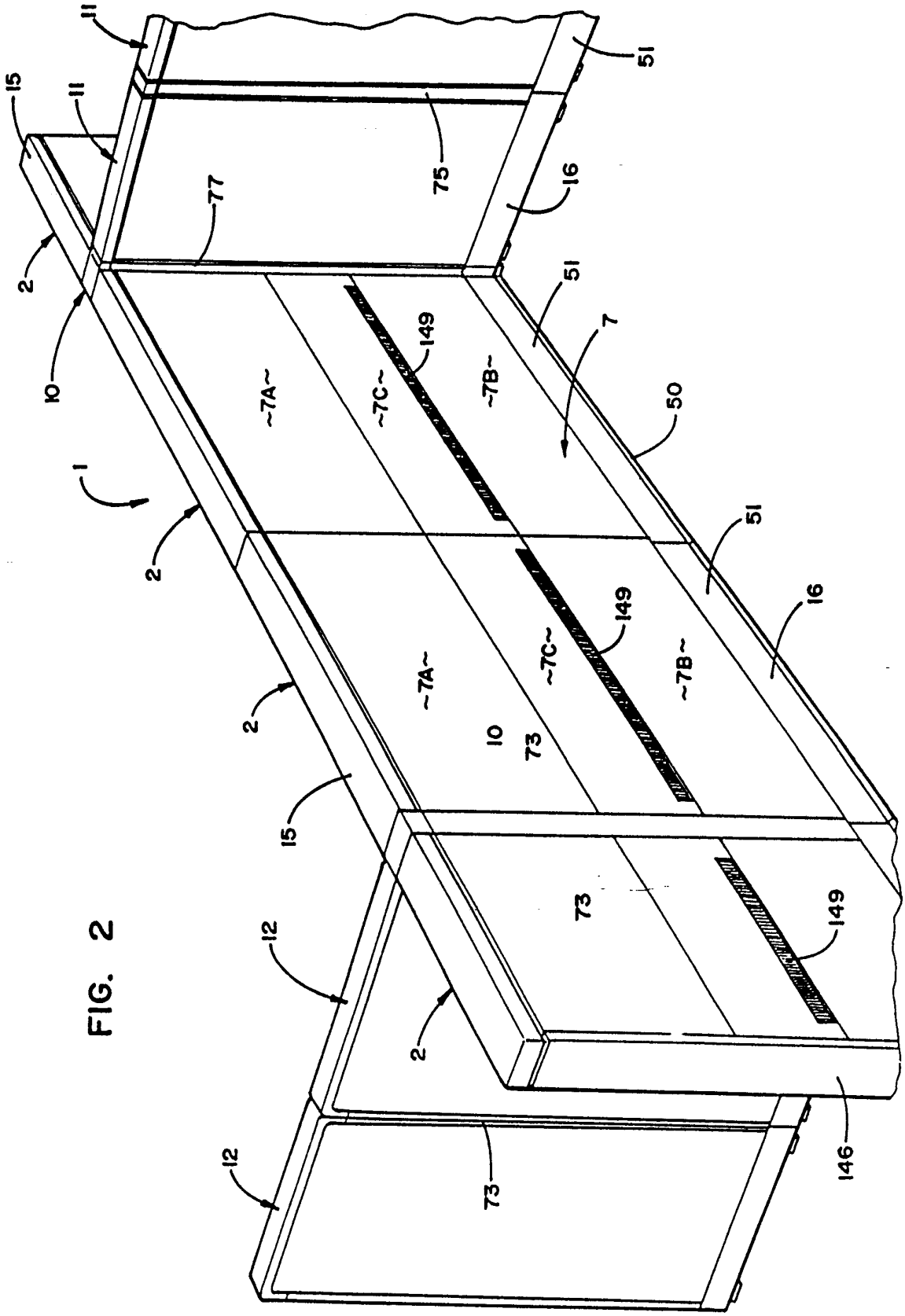
11
15
11
51
75
16
77
2
10
51
7
149
~7A~
~7C~
~7B~
50
1
2
51
16
149
~7A~
~7C~
~7B~
2
10
73
15
73
149
12
2
146
12
73

FIG. 2

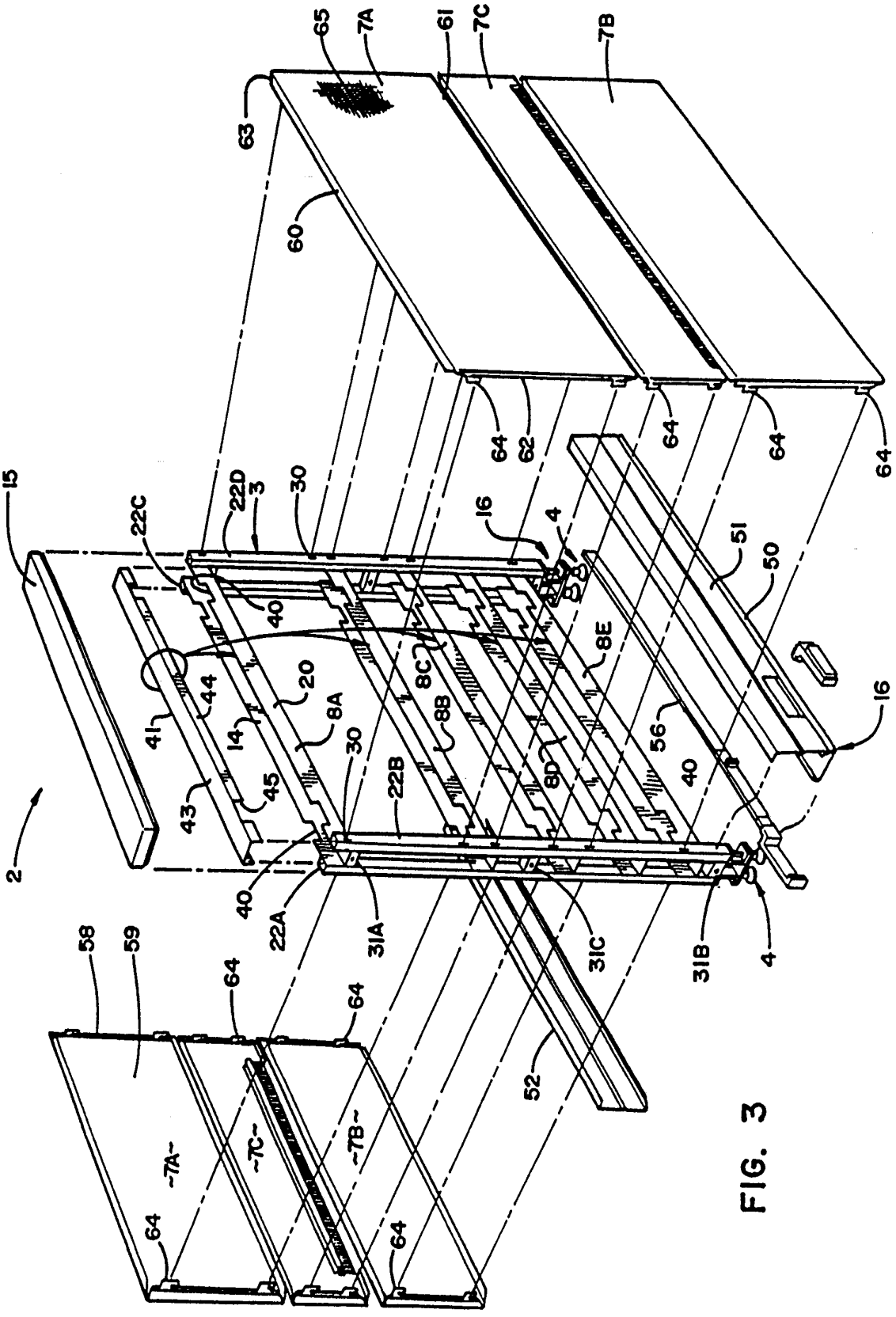
65
7A
61
7C
7B
63
60
64
62
64
64
64
15
22C
22D
3
30
16
4
51
50
40
8E
8C
8B
8A
20
44
41
14
45
43
30
22B
8D
56
40
16
2
40
22A
31A
31C
31B
4
58
59
64
64
52
-7A-
-7C-
-7B-
64
64

FIG. 3

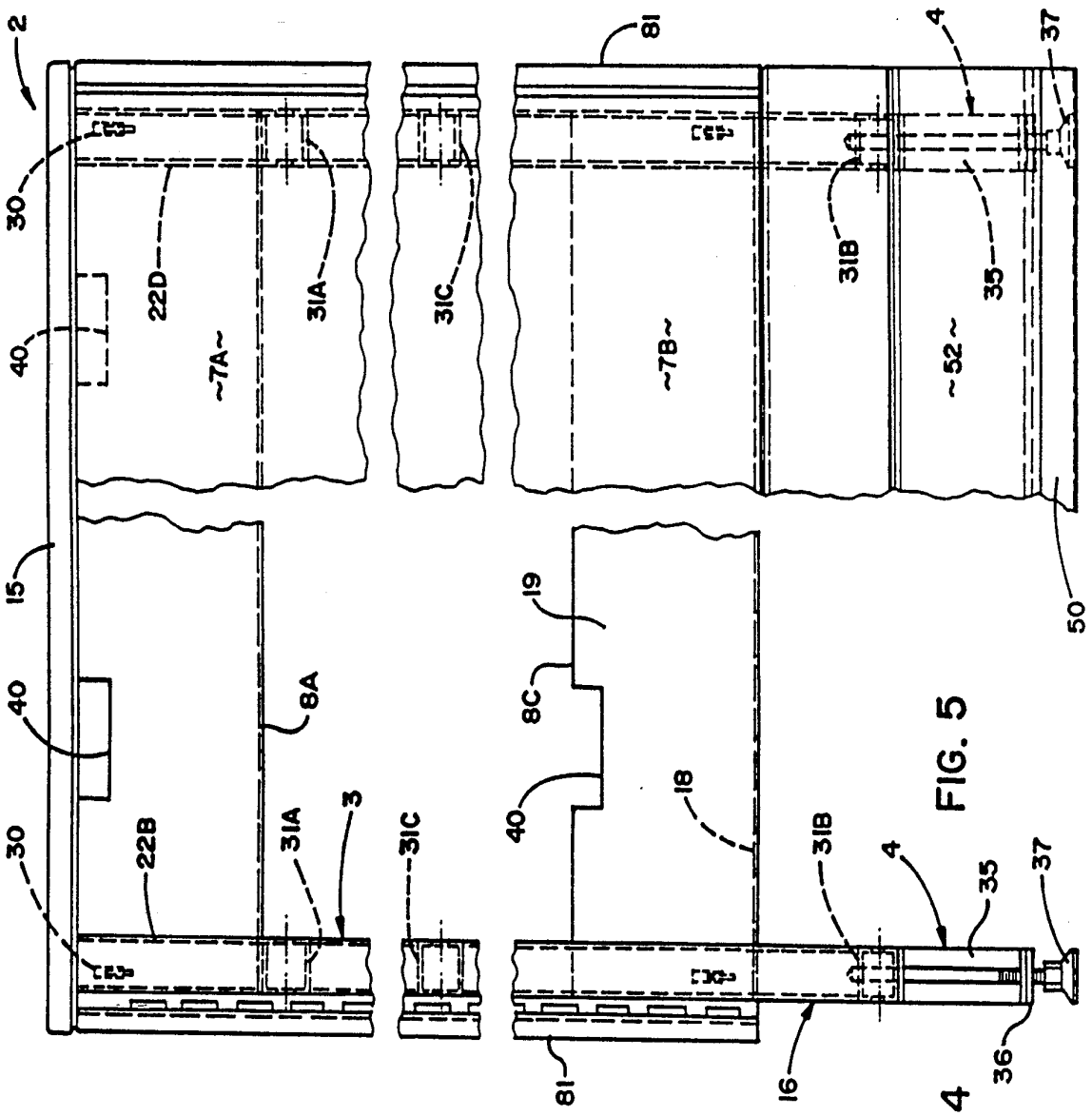
2
30
40
22D
~7A~
31A
31C
81
~7B~
31B
4
35
~52~
37
50
15
19
8C
18
8A
3
22B
36
16

FIG. 5

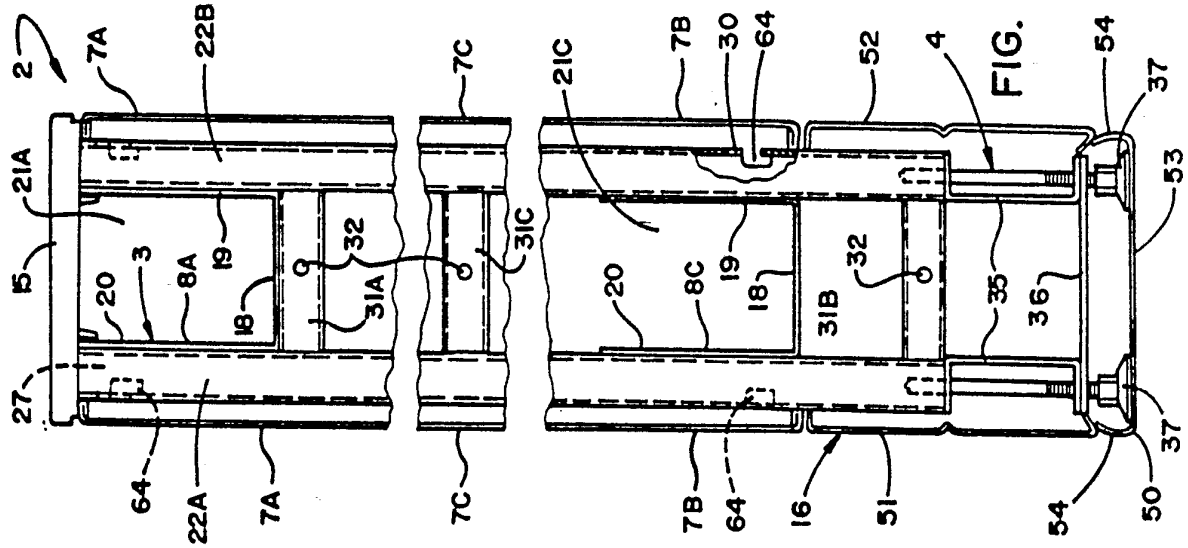
2
7A
22B
7C
21C
7B
30
64
52
4
54
37
21A
15
20
3
8A
19
18
32
31A
31C
8C
31B
35
36
53
27
64
22A
7A
7C
7B
16
51
50

FIG. 4

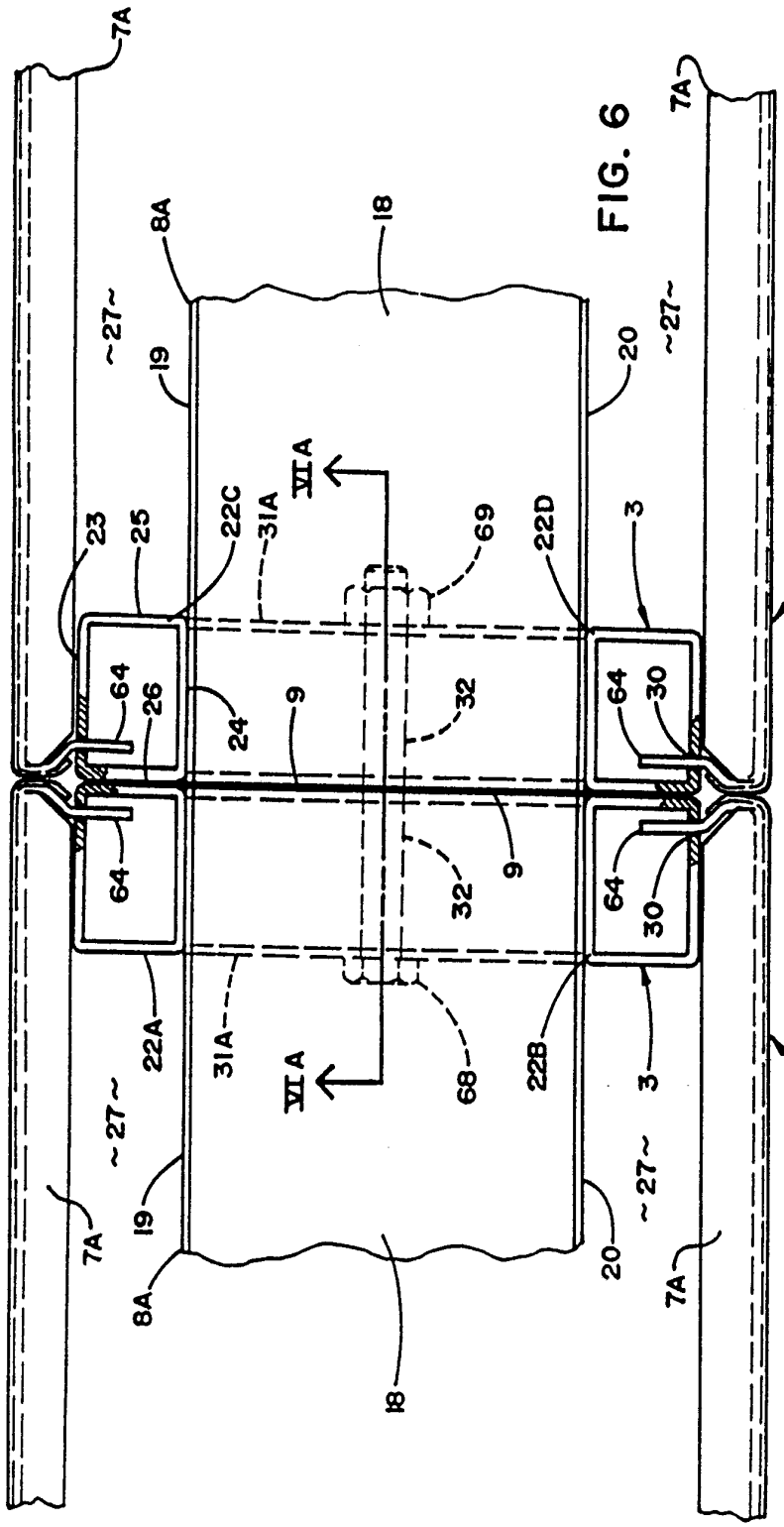
7A
8A
18
~27~
19
20
VIIA
23
25
22C
31A
69
22D
3
2
64
26
24
9
32
30
22A
22B
68

FIG. 6

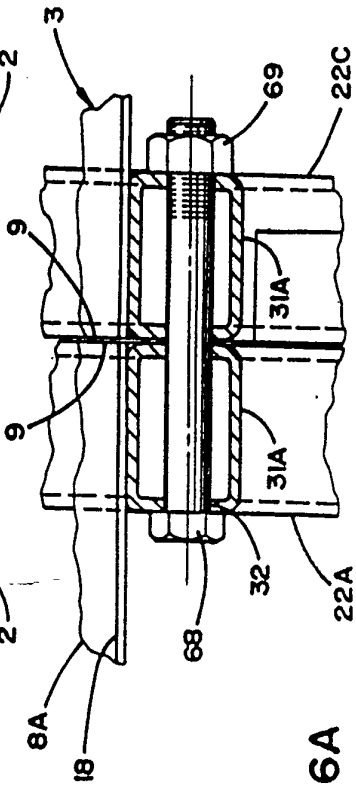
3
69
22C
9
31A
32
68
22A
8A
18
2

FIG. 6A

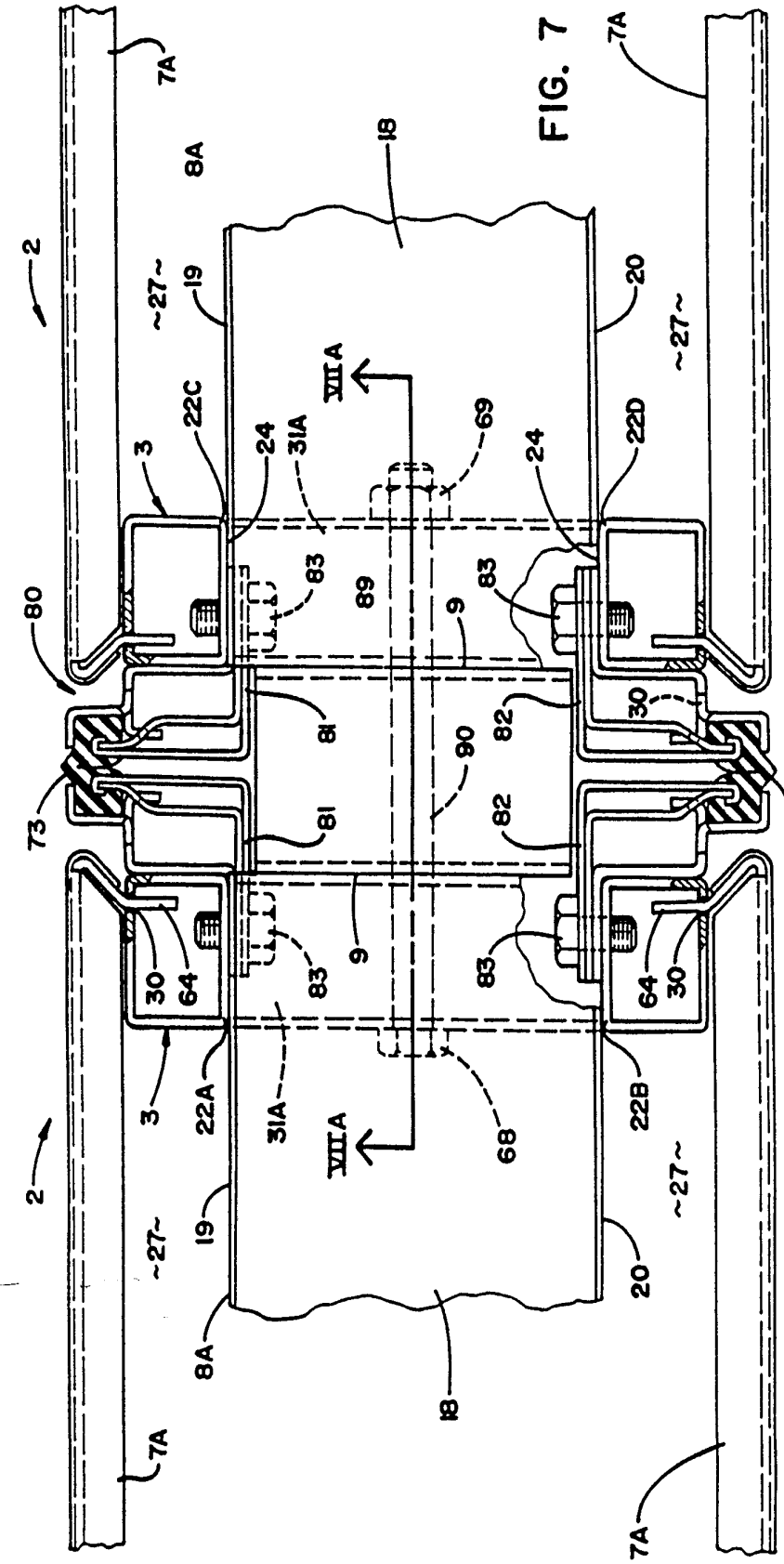
2
7A
8A
18
19
20
~27~
3
22C
24
31A
69
VII A
22D
80
83
89
9
81
82
30
90
73
64
22A
22B
68

FIG. 7

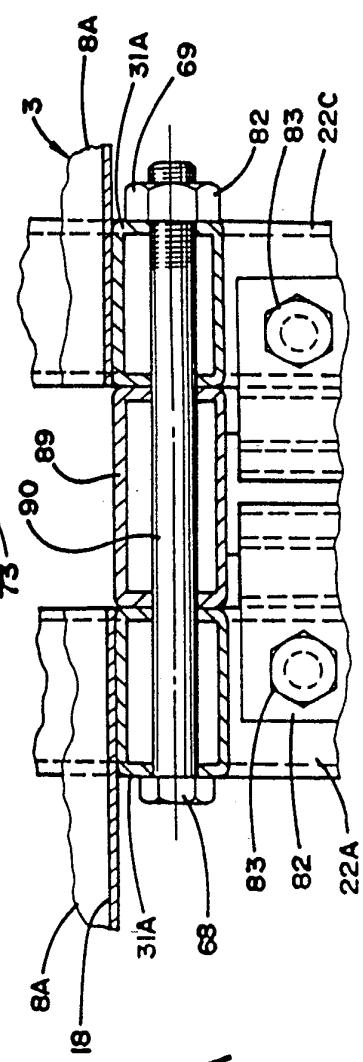
3
8A
31A
69
82
83
22C
89
90
22A
68
18

FIG. 7A

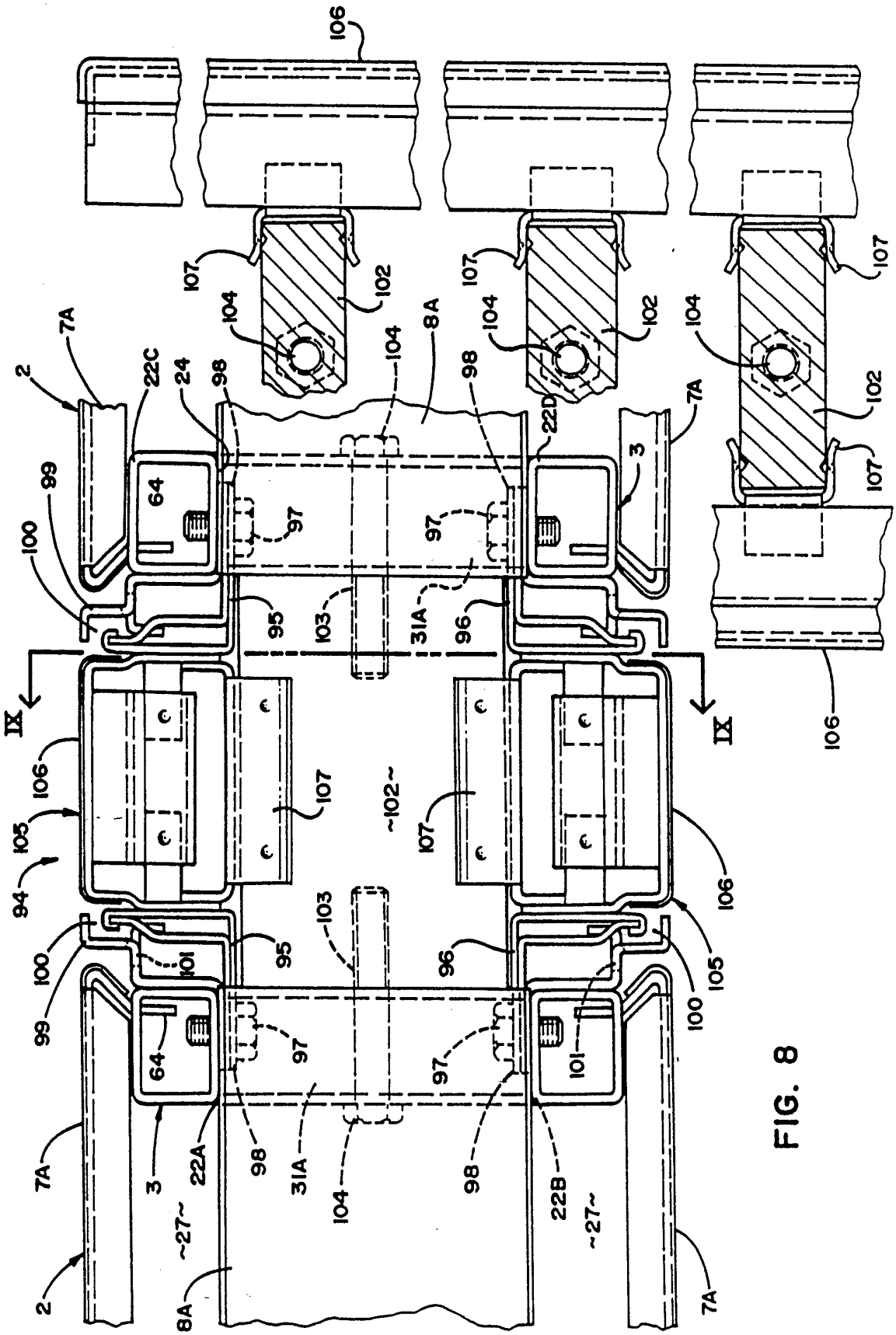
106
107
102
104
8A
7A
2
22C
24
98
22D
3
64
97
99
100
95
103
31A
96
IX
105
94
101
22A
22B
~27~

FIG. 9

FIG. 8

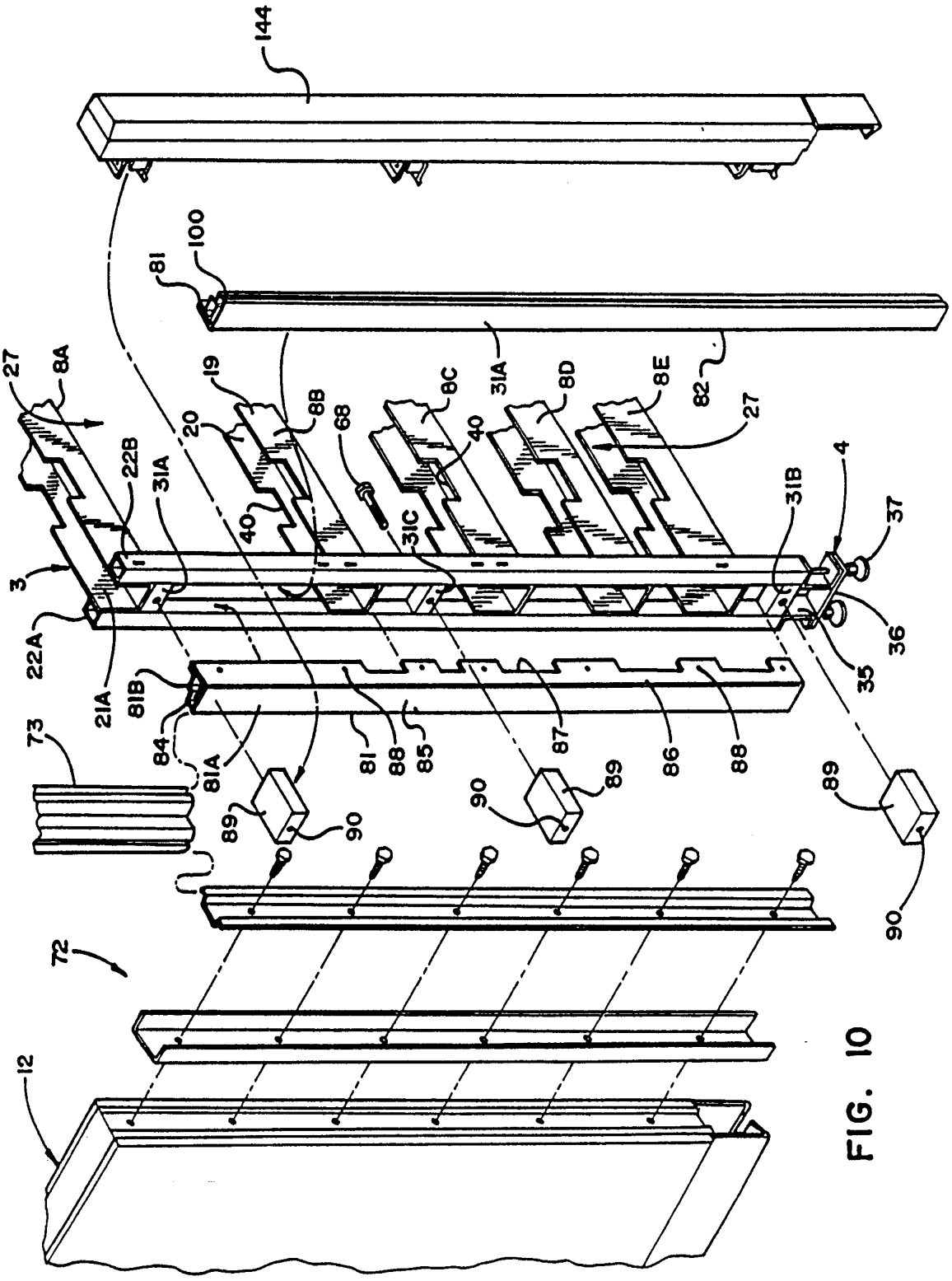
144
100
81
27
8A
19
8B
68
8C
31A
8D
8E
82
27
20
22B
31A
40
40
31C
31B
4
37
3
22A
36
35
21A
81B
84
81A
73
81
88
85
87
86
88
89
90
89
90
89
90
72
12

FIG. 10

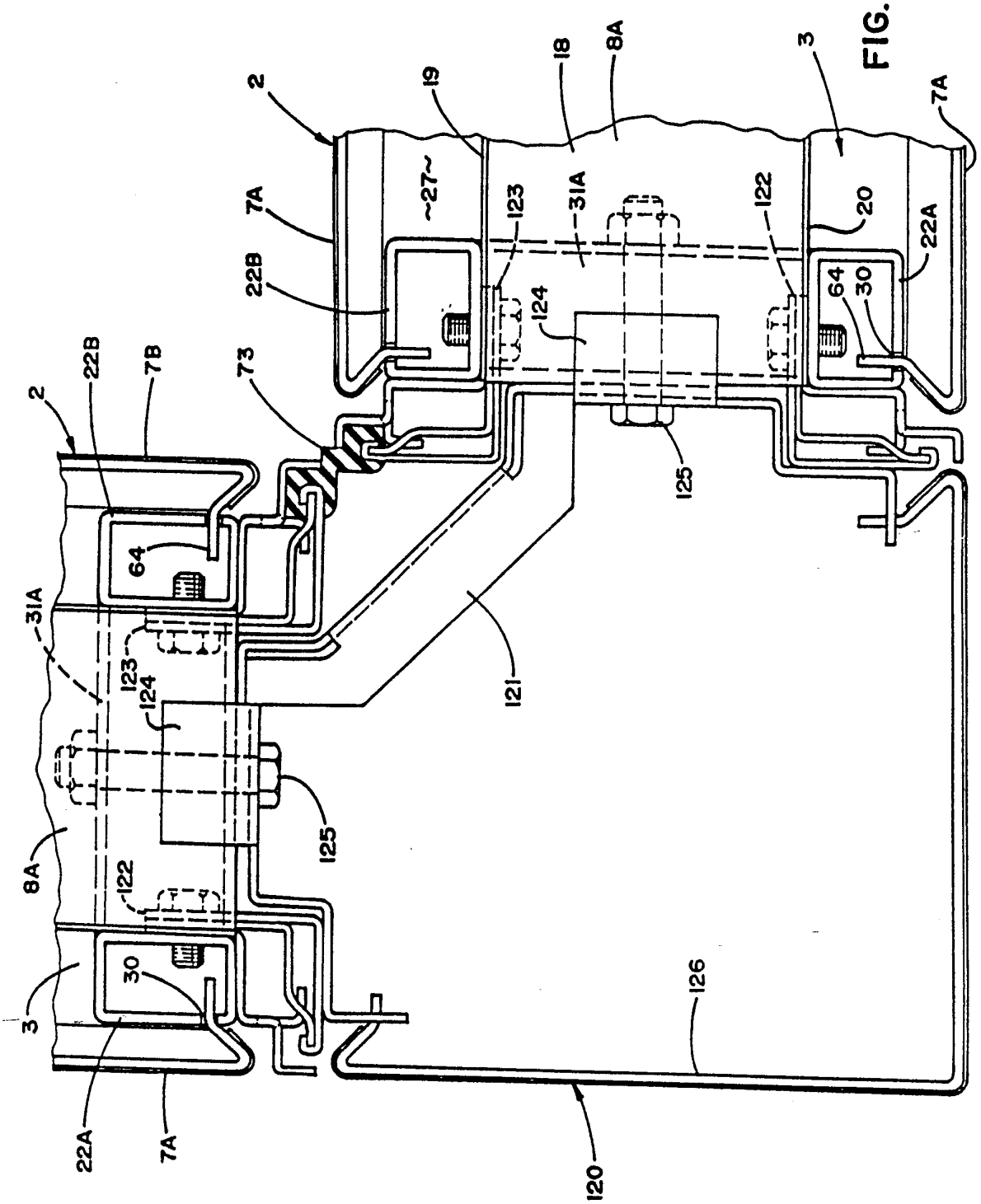
2
19
18
8A
3
7A
~27~
123
31A
122
20
22A
7A
22B
124
64
30
73
7B
125
121
126
120

FIG. 12

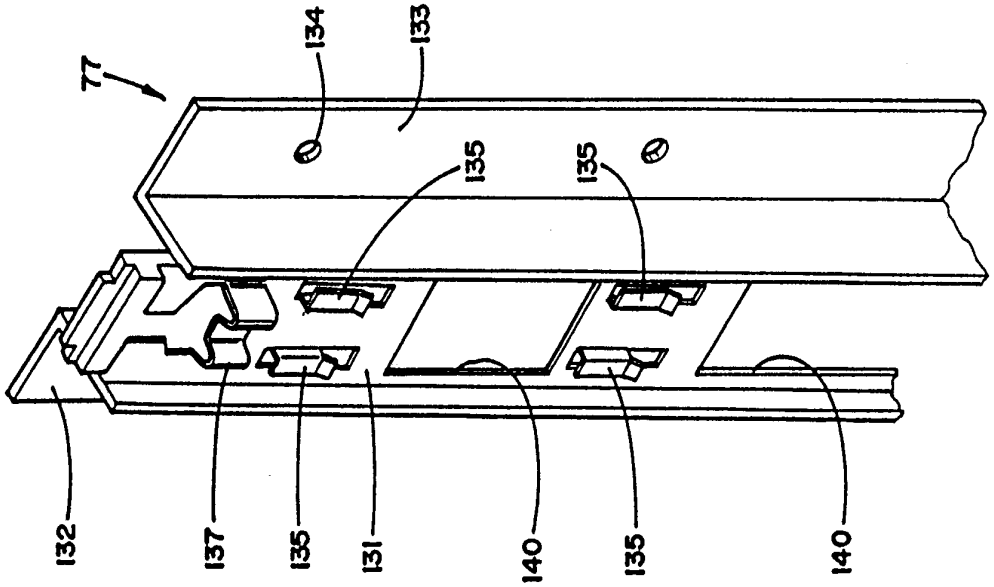

FIG. 14

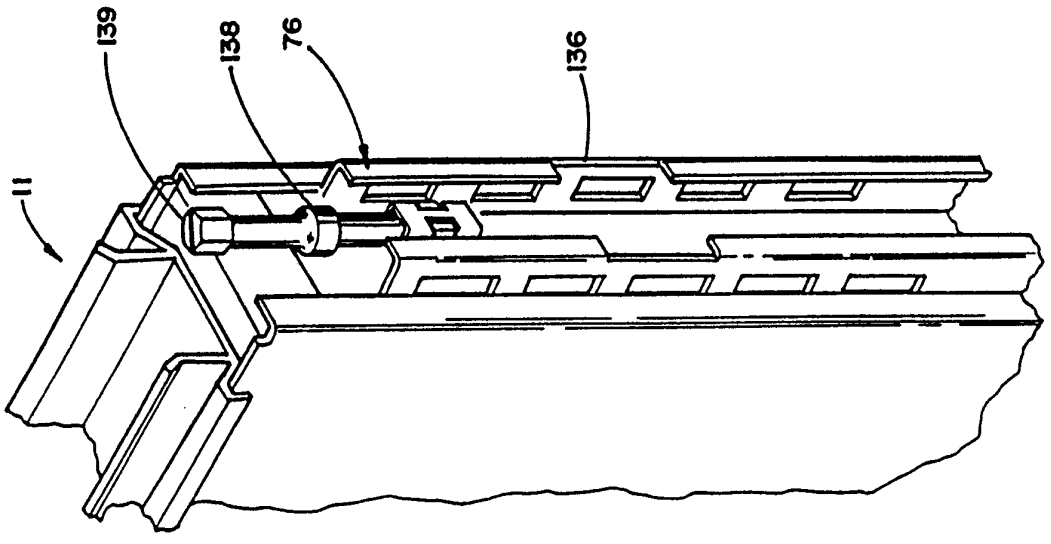

FIG. 13

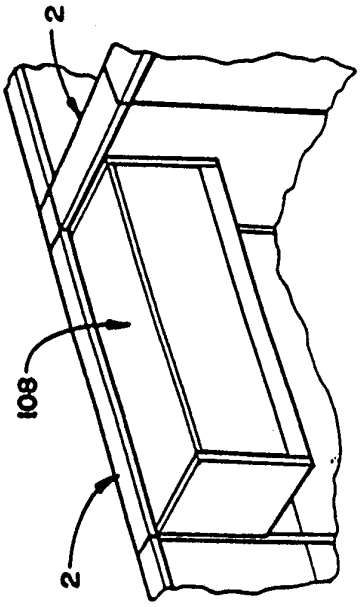

FIG. 15

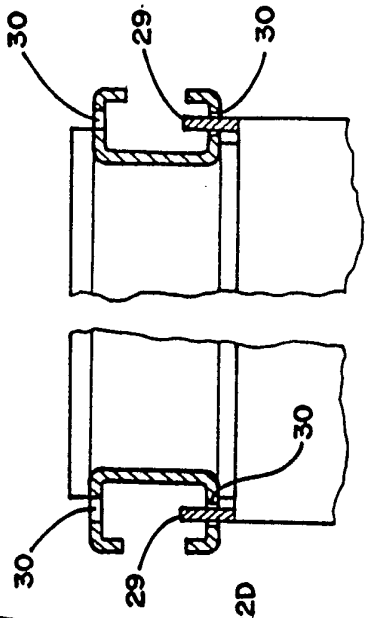

FIG. 16

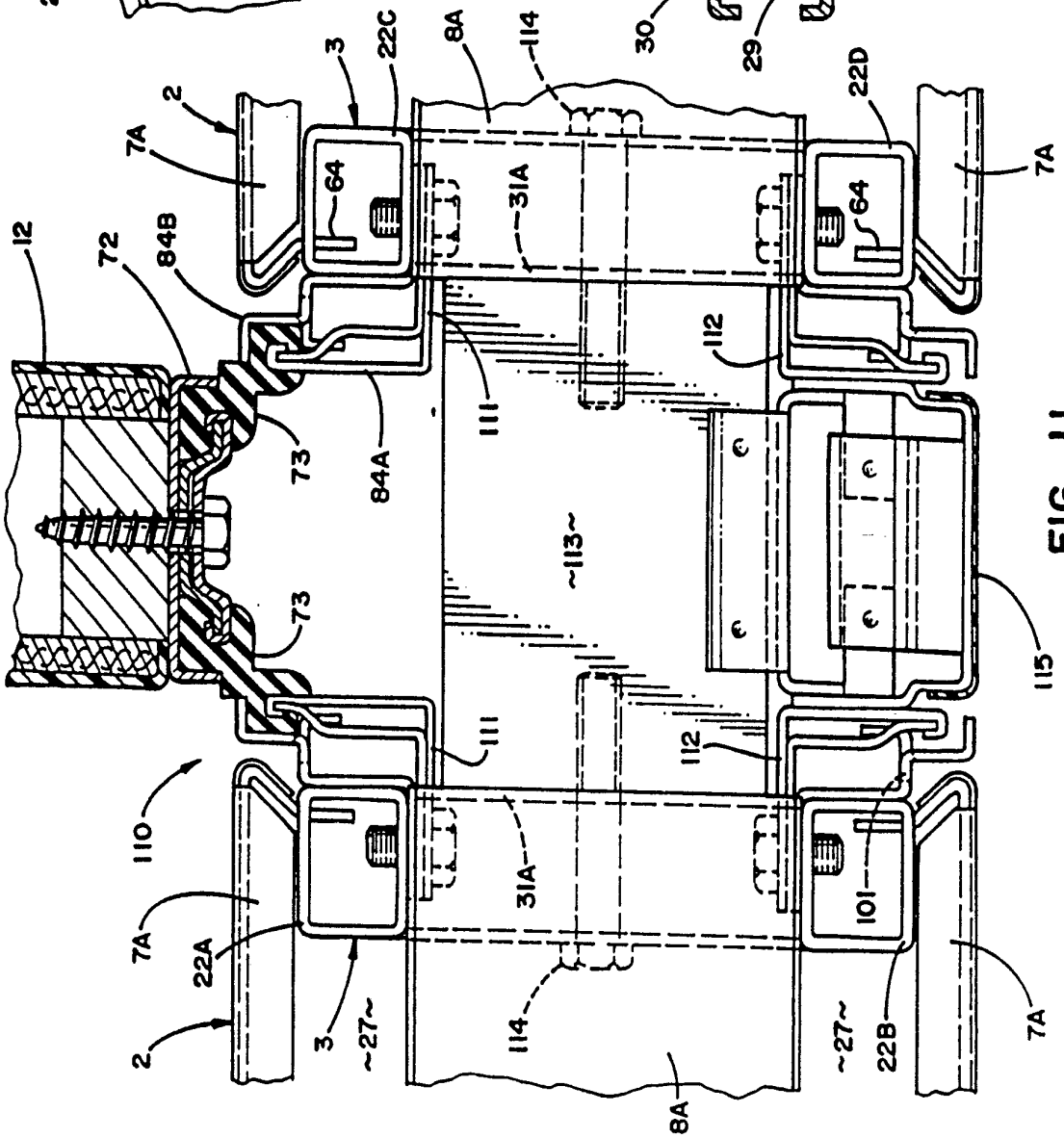

FIG. 11

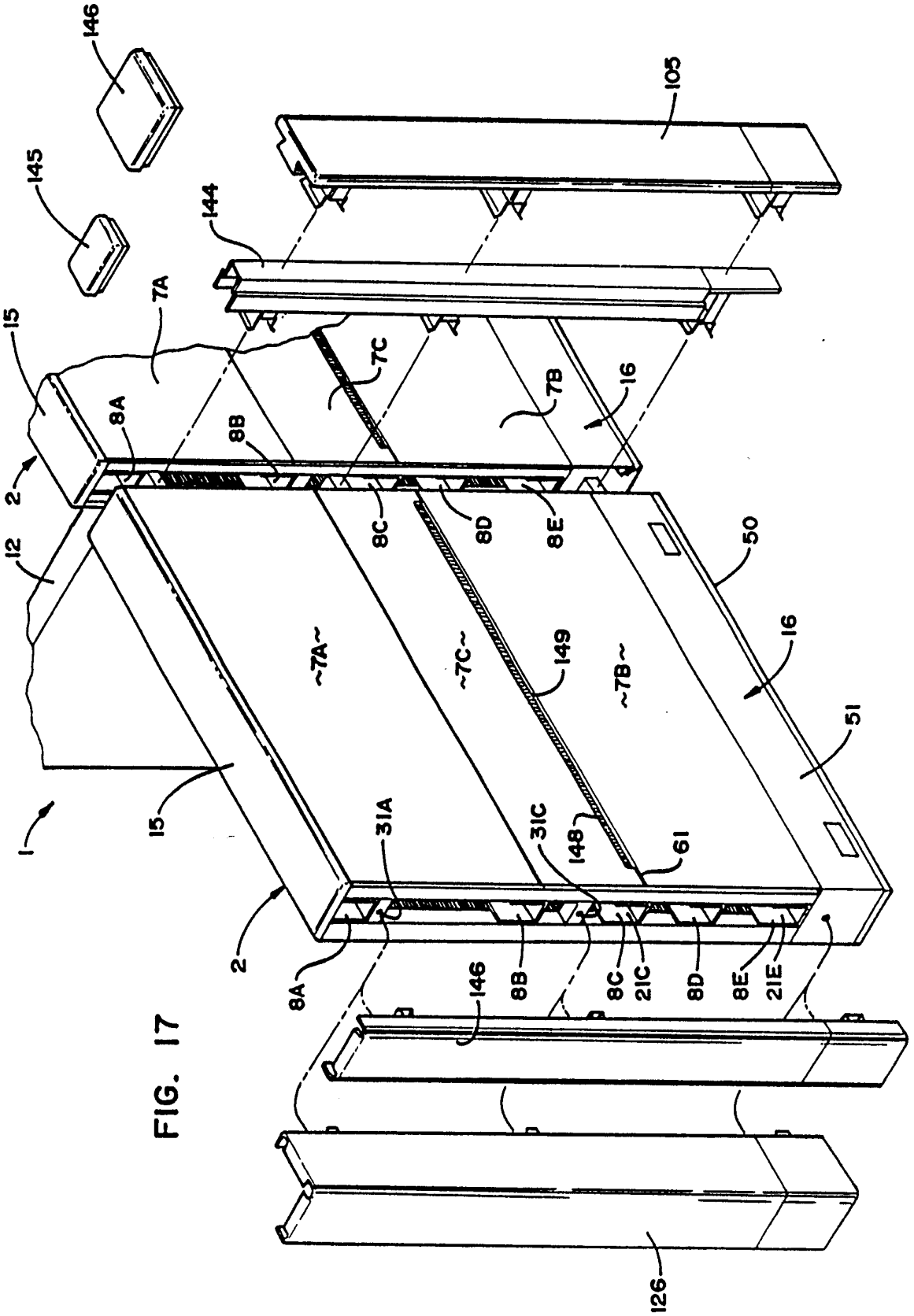
146
145
144
105
7A
15
7C
7B
16
8A
8B
2
8C
8D
8E
12
50
~7A~
~7C~
149
~7B~
16
51
1
15
31A
31C
148
61
2
8A
146
8B
8C
21C
8D
8E
21E
126

FIG. 17

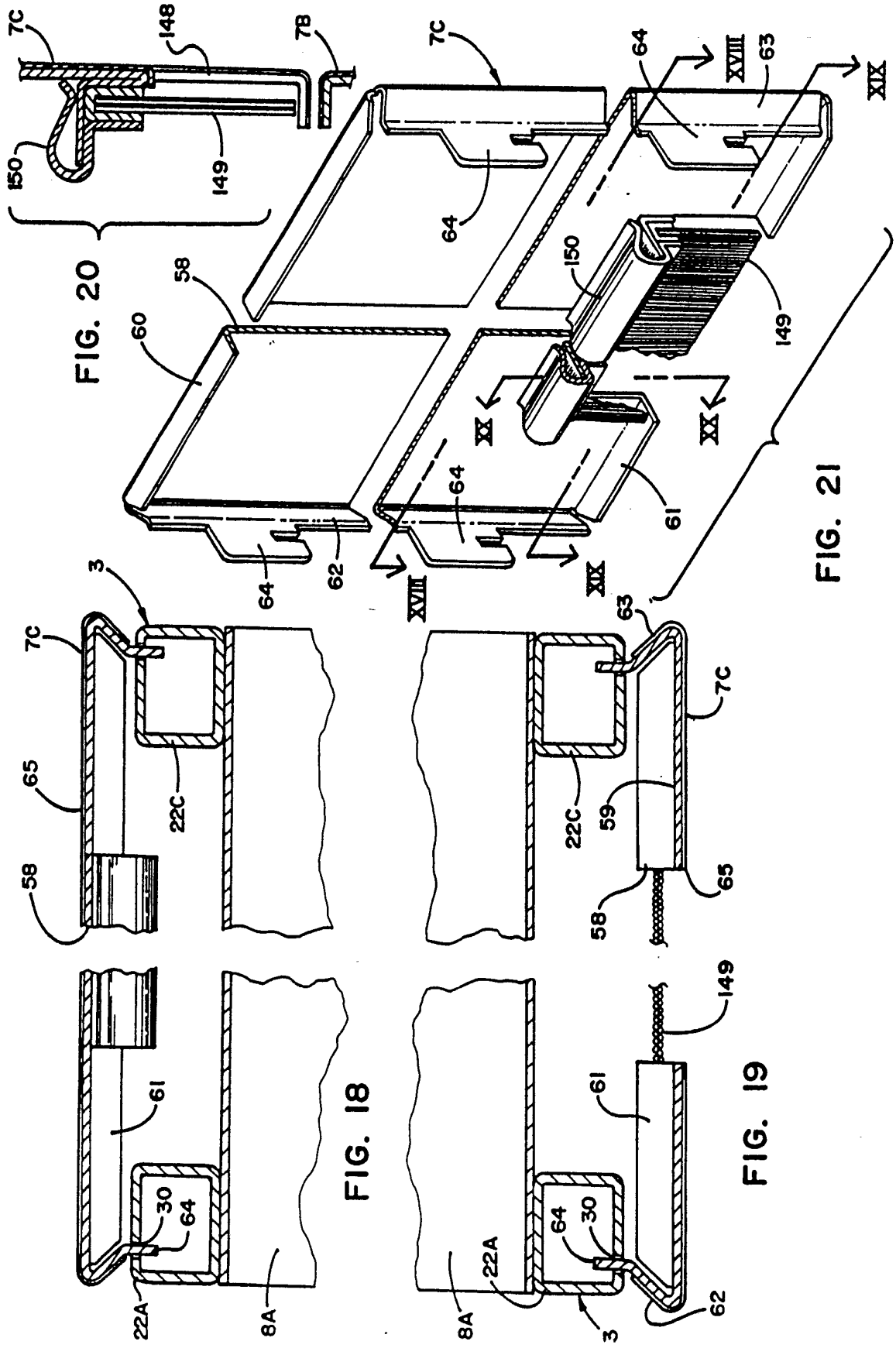

FIG. 20

FIG. 21

FIG. 18

FIG. 19

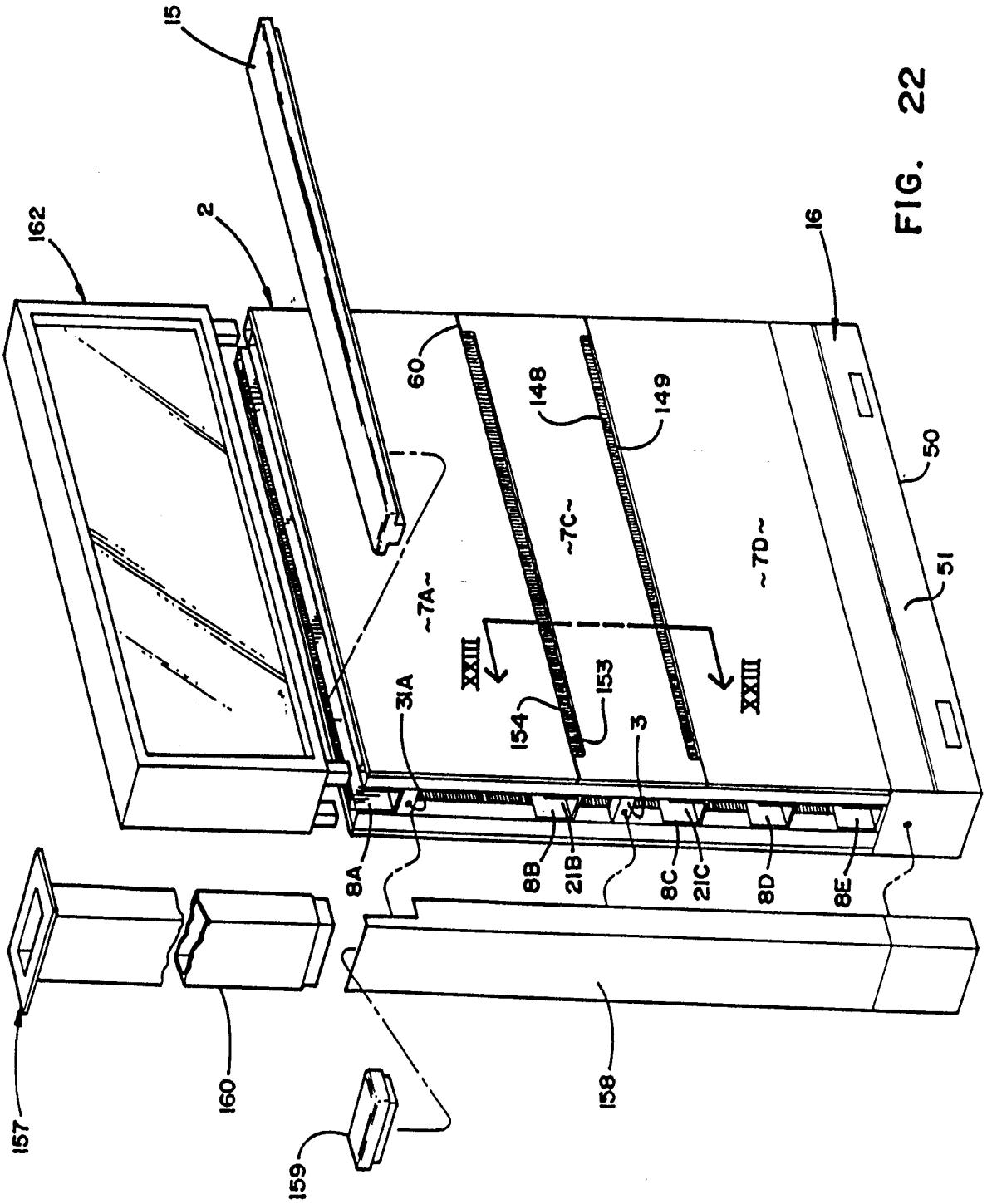
15
162
2
16
60
148
149
50
51
~7C~
~7D~
~7A~
XXIII
XXIII
31A
154
153
3
8A
8B
21B
8C
21C
8D
8E
157
160
158
159

FIG. 22

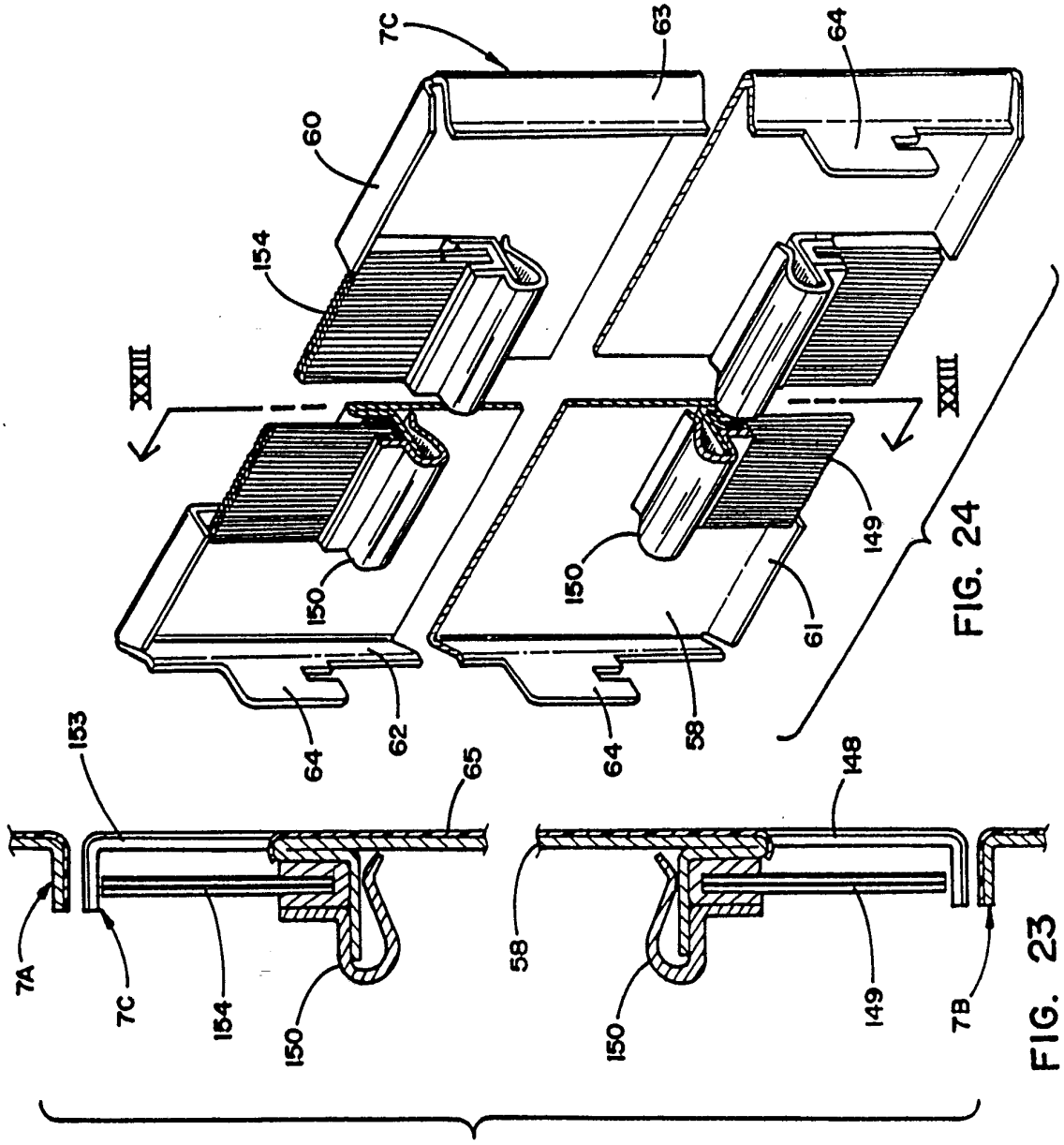
7C
63
64
60
154
XXIII
XXIII
149
150
150
61
64
62
64
58
153
65
148
58
7A
7C
154
150
150
149
7B

FIG. 24

FIG. 23

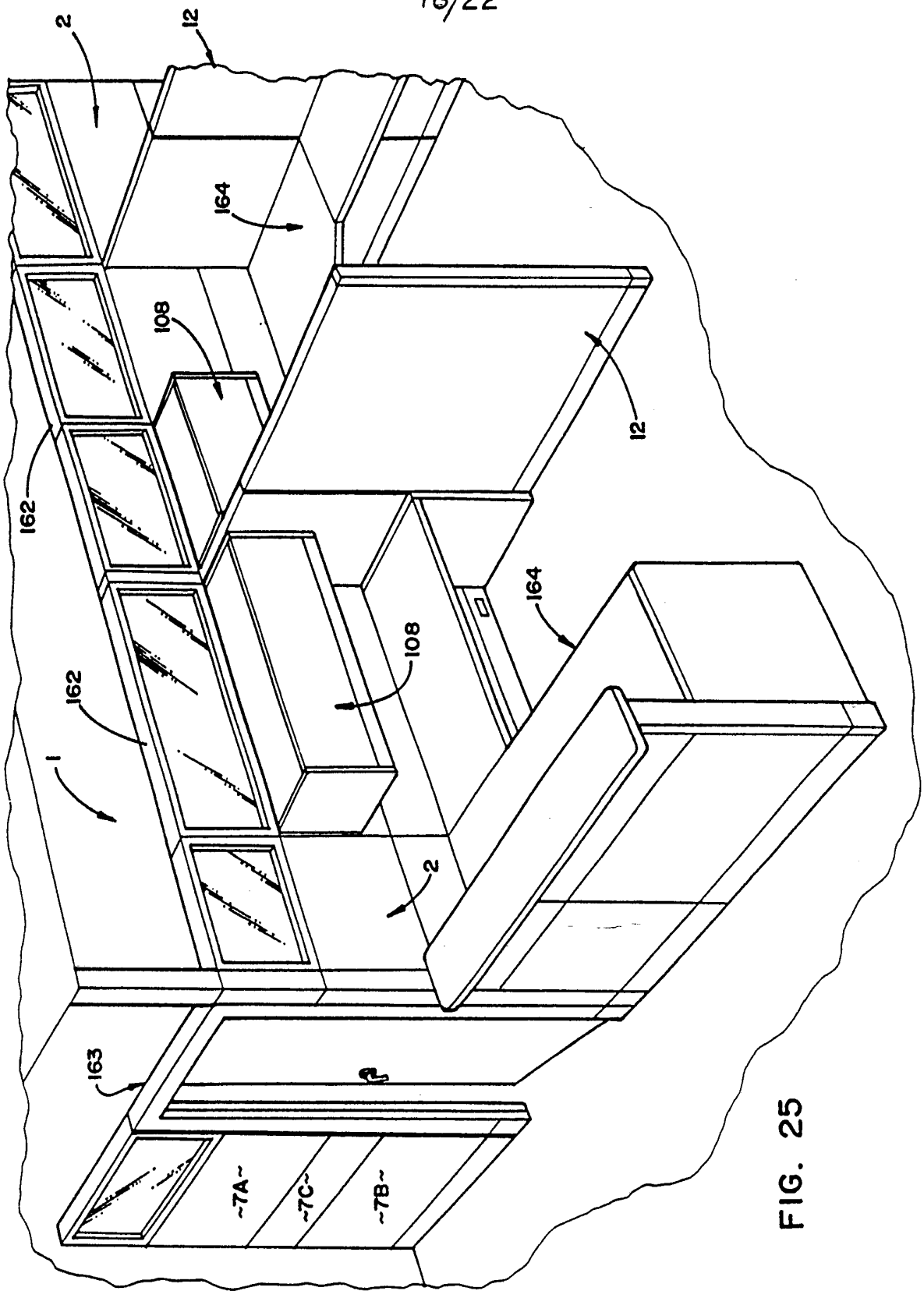

FIG. 25

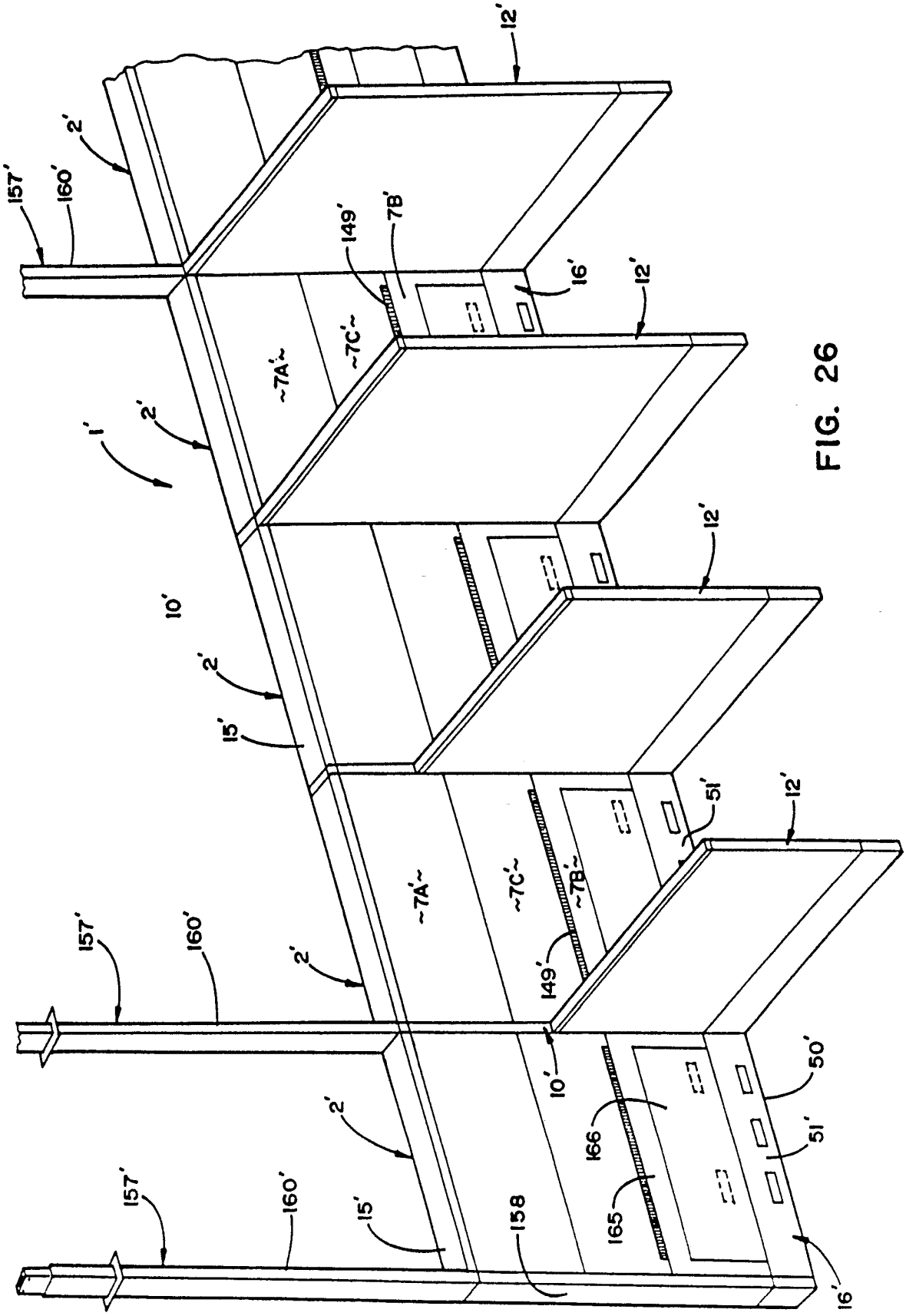

FIG. 26

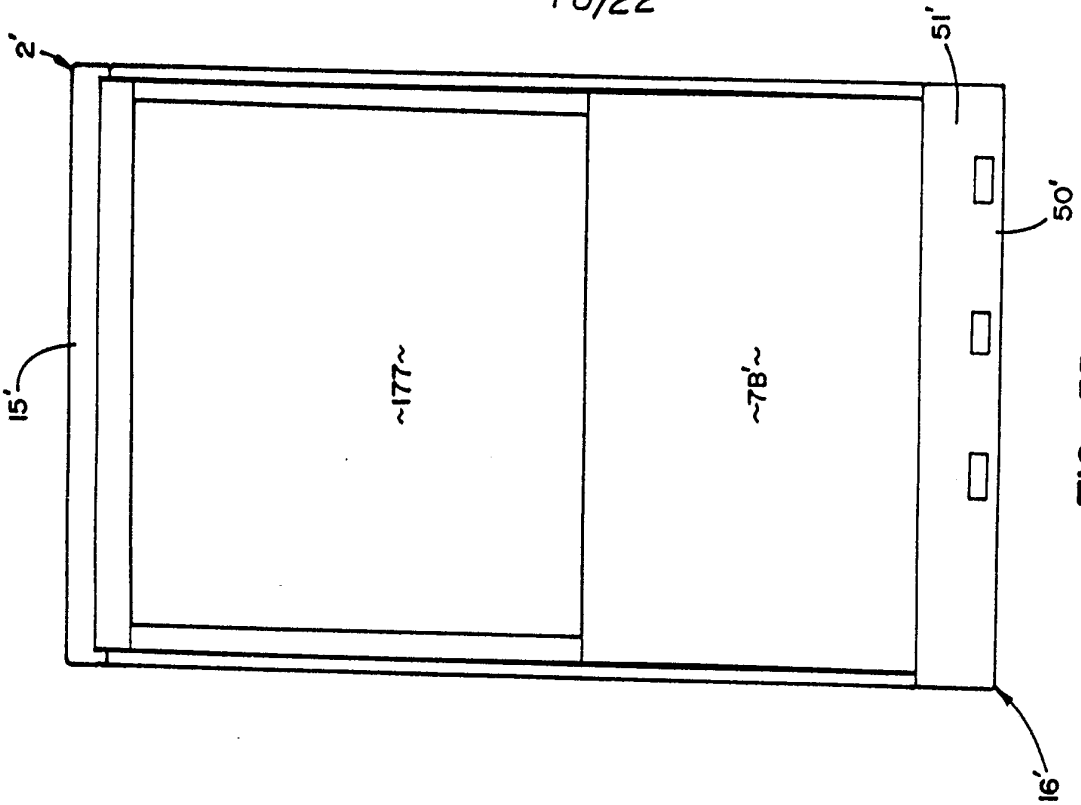

FIG. 35

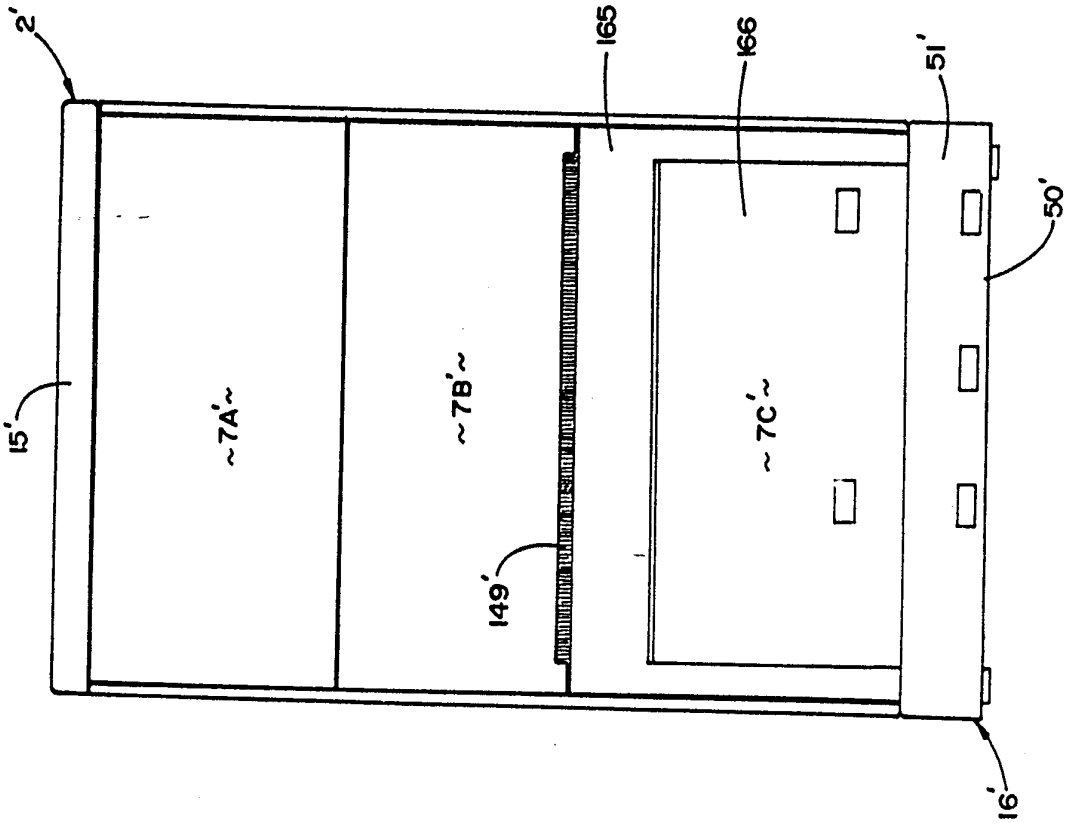

FIG. 26A

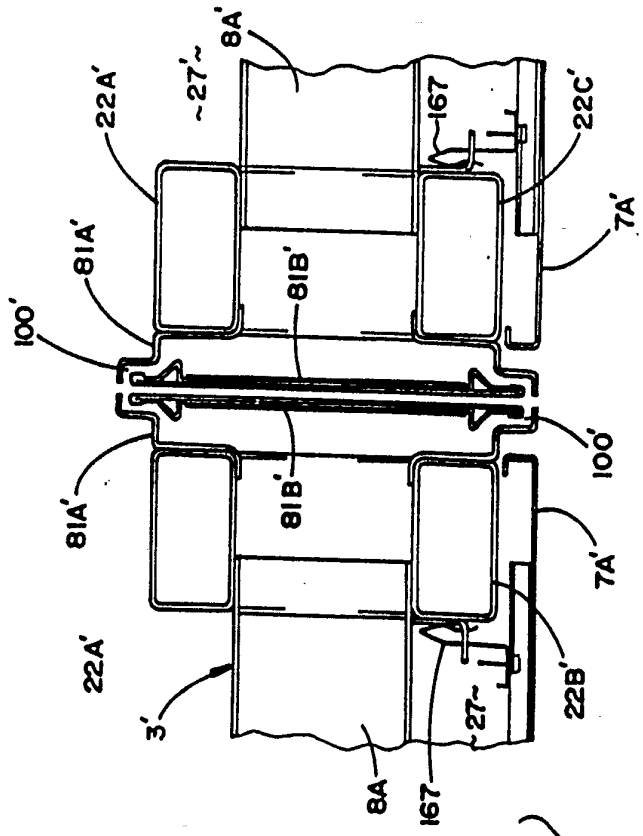
8A'
~27'~
22A'
167
22C'
7A'
81A'
81B'
100'
100'
81A'
81B'
7A'
22A'
22B'
3'
~27~
8A
167

FIG. 28

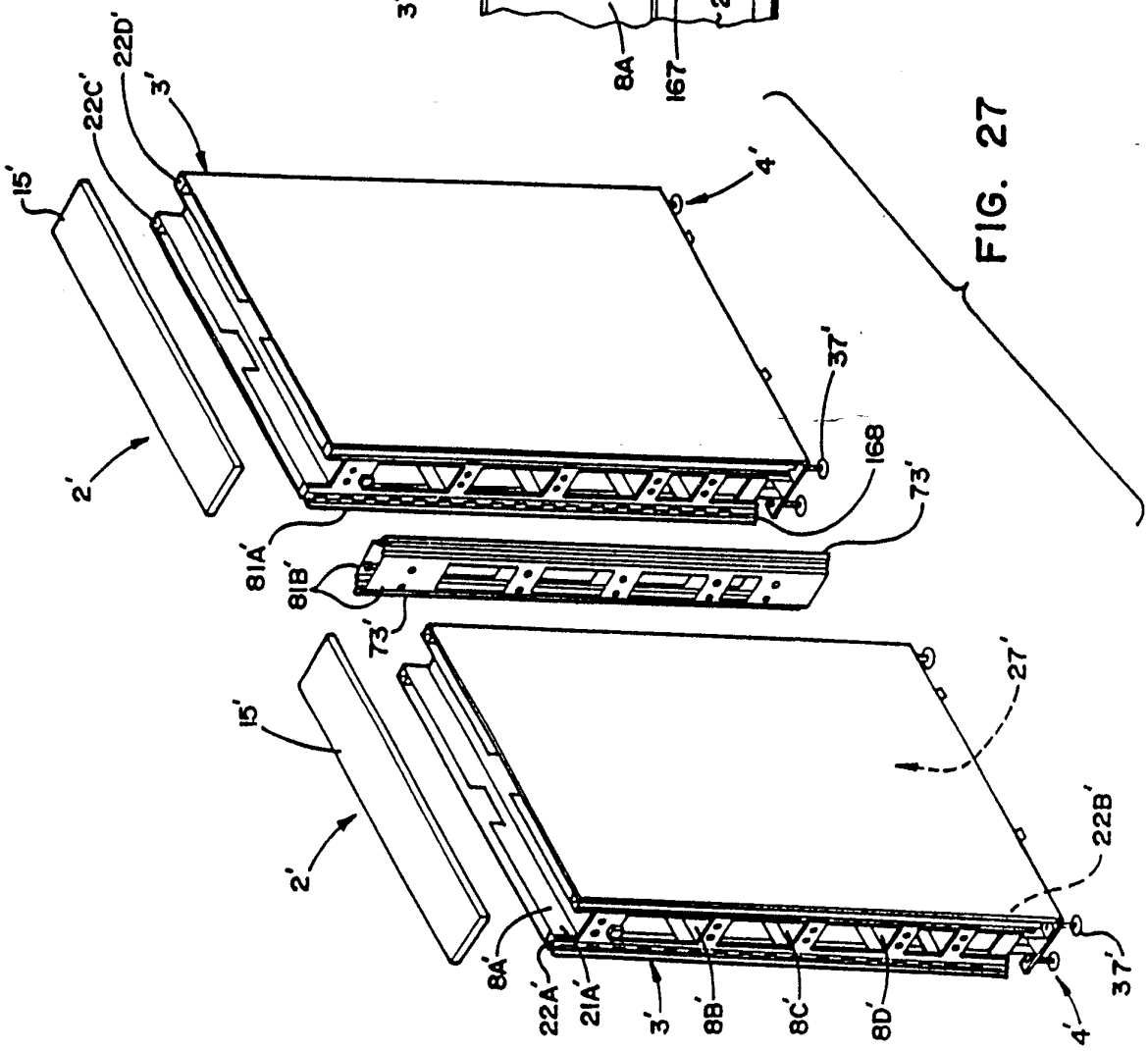
15'
22C'
22D'
3'
4'
37'
168
73'
2'
81A'
81B'
73'
15'
27'
2'
22B'
8A'
22A'
21A'
3'
8B'
8C'
8D'
37'
4'

FIG. 27

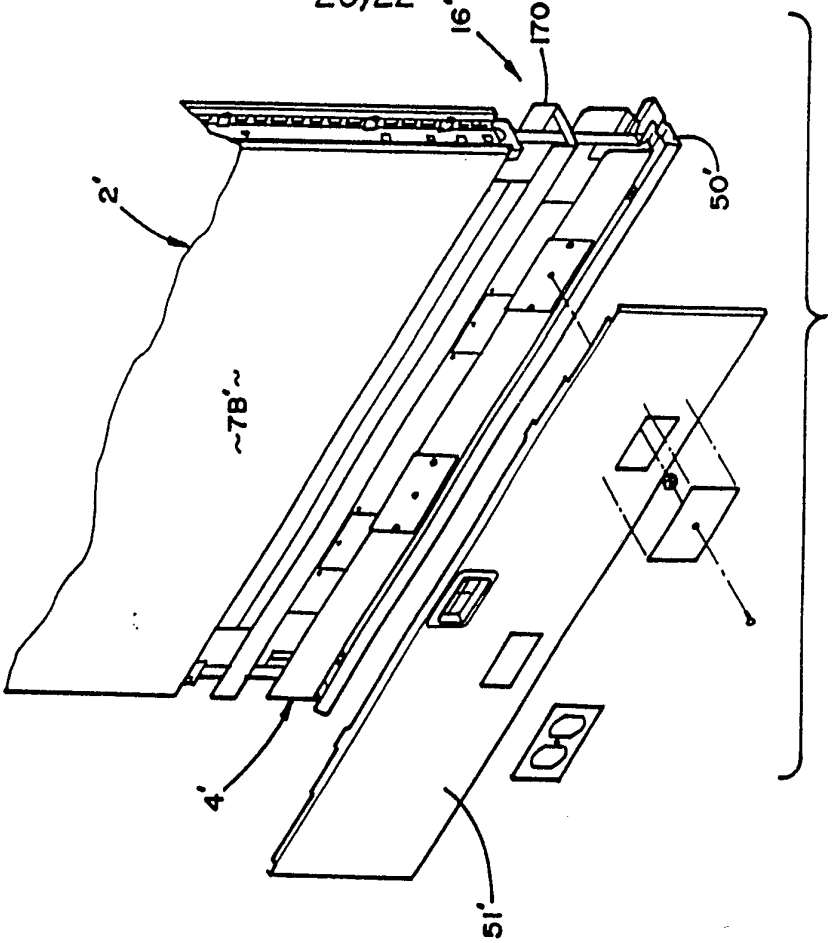

FIG. 30

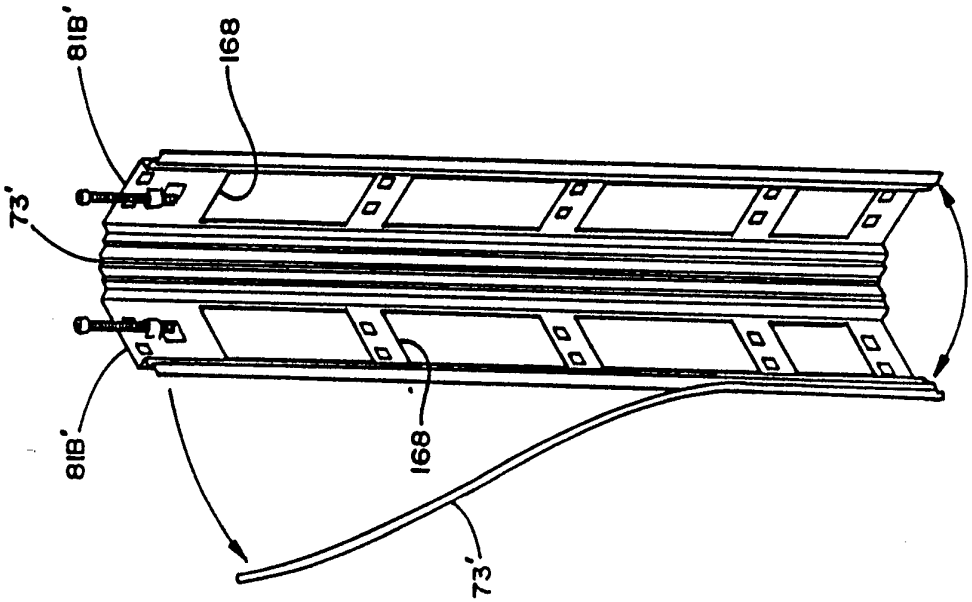

FIG. 29

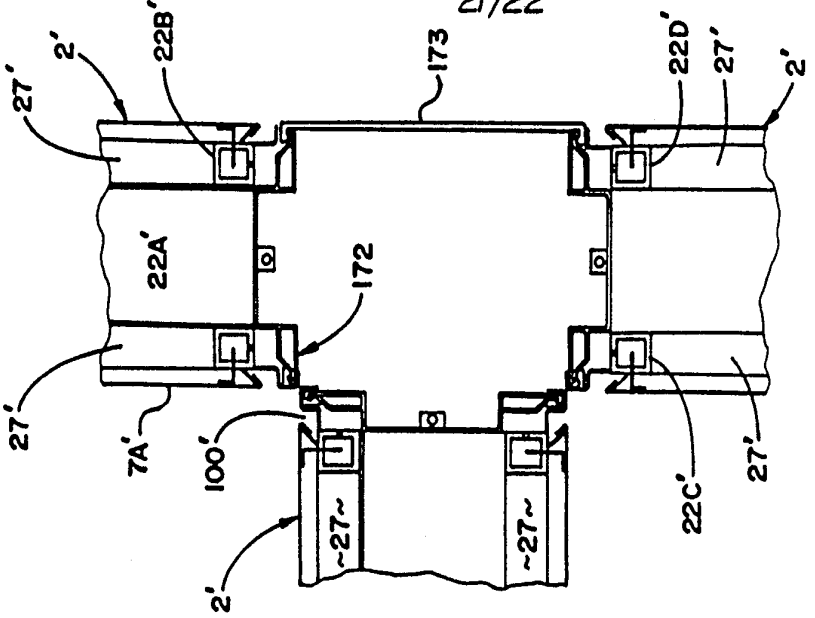
27'
2'
22B'
173
22D'
27'
2'
22A'
172
27'
7A'
100'
~27~
~27~
22C'
27'
2'

FIG. 32

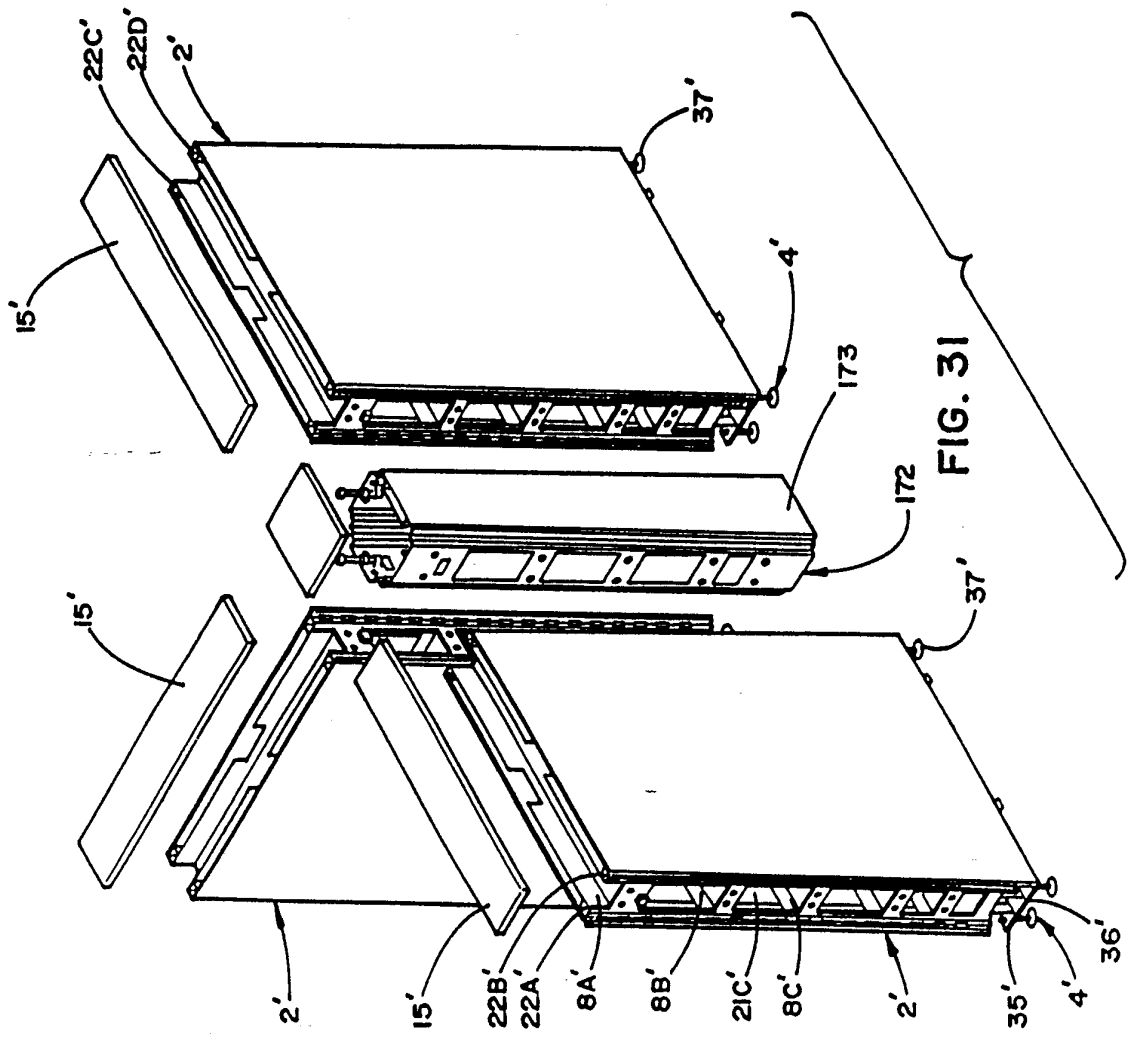
22C'
22D'
2'
37'
15'
4'
173
172
37'
15'
2'
15'
22B'
22A'
8A'
8B'
21C'
8C'
2'
35'
4'
36'

FIG. 31

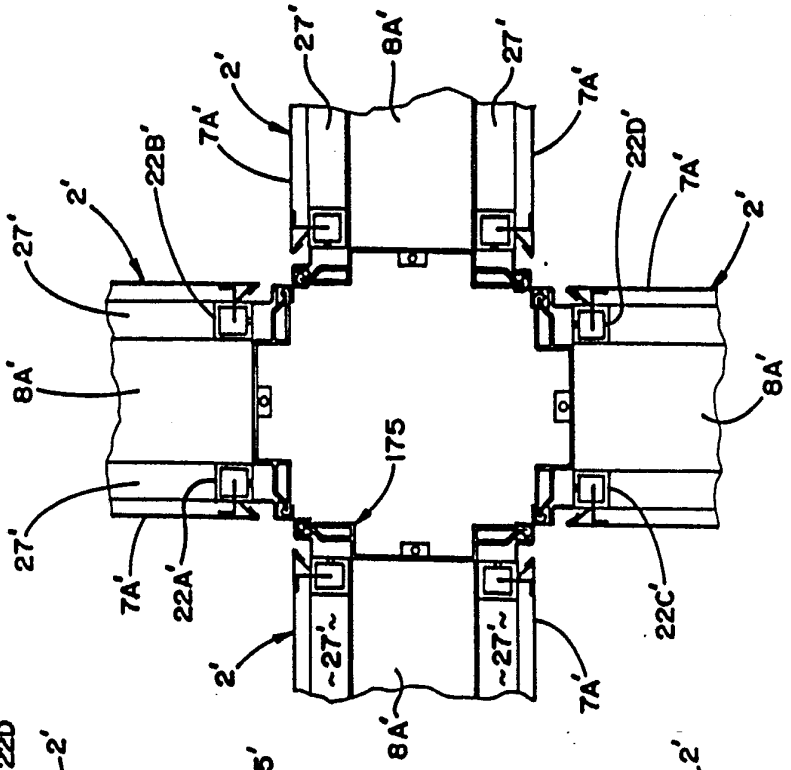
27'
2'
8A'
27'
7A'
22B'
7A'
22D'
2'
27'
7A'
2'
8A'
8A'
175
27'
7A'
22A'
22C'
2'
~27'~
~27'~
8A'
7A'

FIG. 34

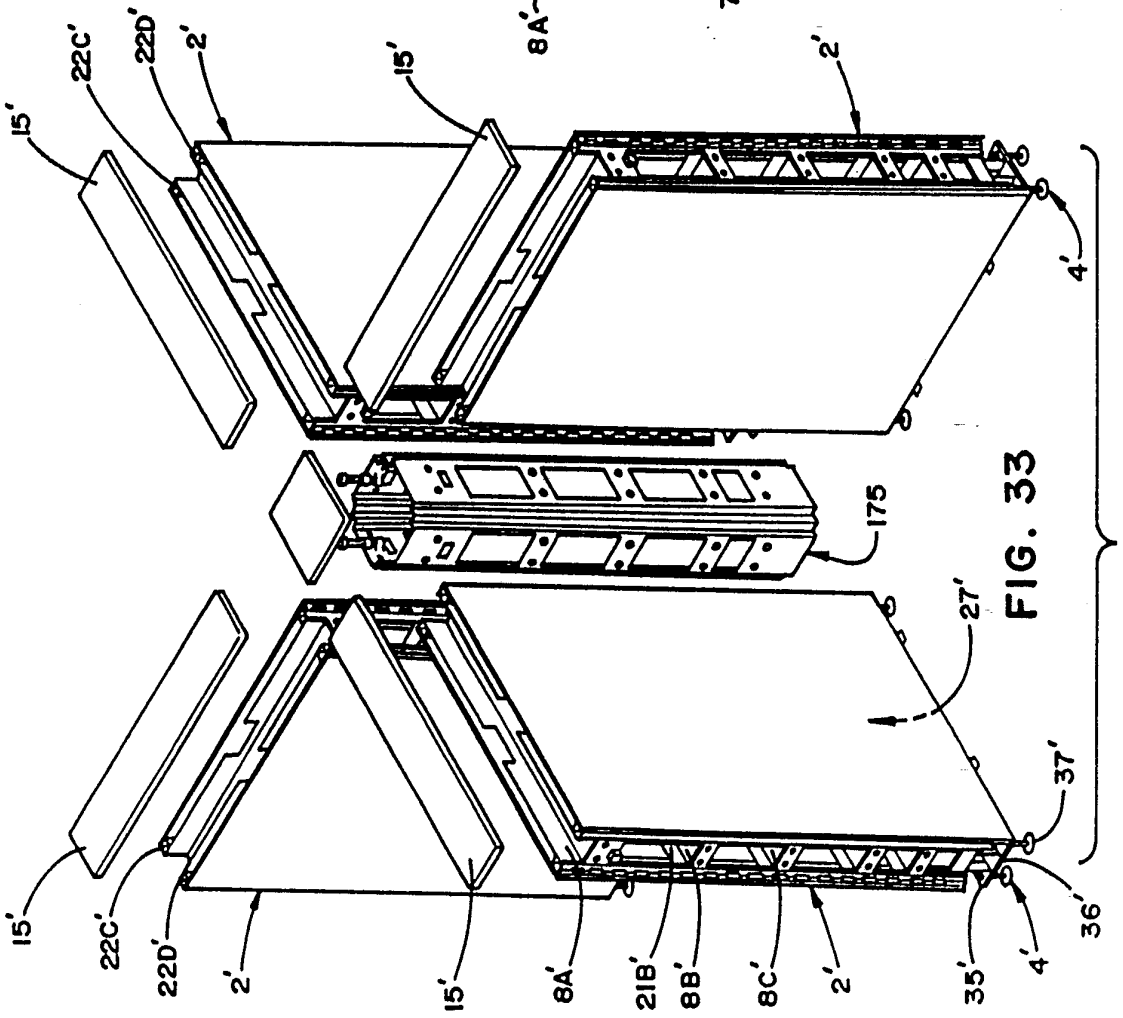
15'
22C'
22D'
2'
15'
2'
4'
175
27'
37'
36'
15'
22C'
22D'
2'
15'
8A'
21B'
8B'
8C'
2'
35'
4'

FIG. 33

INTERNATIONAL SEARCH REPORT

International Application PCT/US92/00155

I. CLASSIFICATION OF SUBJECT MATTER (if several classification symbols apply, indicate all) *

According to International Patent Classification (IPC) or to both National Classification and IPC

IPC(5): E04B 5/48
US Cl.: 52/221

II. FIELDS SEARCHED

Minimum Documentation Searched *

Classification System	Classification Symbols
U.S. Cl.	52/221, 239, 36

Documentation Searched other than Minimum Documentation to the Extent that such Documents are included in the Fields Searched *

III. DOCUMENTS CONSIDERED TO BE RELEVANT *

Category *	Citation of Document, ** with indication, where appropriate, of the relevant passages **	Relevant to Claim No. *
X	US, A, 4,535,577 Tenser et al. 20 August 1985. Note fig. 1	1-30
Y,P	US,A, 5,065,559 Zegel et al. 19 November 1991. Note fig. 2	1-30
Y,P	US, A, 5,065,556 DeLong et al. 19 November 1991.	1-30
Y	US, A, 3,304,683 Ferreira 21 February 1967. Note figures 1 and 5	1-30
Y	DE, A, 1,188,259 Hacquard 04 March 1965.	1-30

* Special categories of cited documents: **

"A" document defining the general state of the art which is not considered to be of particular relevance

"E" earlier document but published on or after the international filing date

"L" document which may throw doubts on priority claim(s) or which is cited to establish the publication date of another citation or other special reason (as specified)

"O" document referring to an oral disclosure, use, exhibition or other means

"P" document published prior to the international filing date but later than the priority date claimed

"T" later document published after the international filing date or priority date and not in conflict with the application but cited to understand the principle or theory underlying the invention

"X" document of particular relevance; the claimed invention cannot be considered novel or cannot be considered to involve an inventive step

"Y" document of particular relevance; the claimed invention cannot be considered to involve an inventive step when the document is combined with one or more other such documents, such combination being obvious to a person skilled in the art.

"&" document member of the same patent family

IV. CERTIFICATION

Date of the Actual Completion of the International Search

17 May 1992

Date of Mailing of the International Search Report

05 JUN 1992

International Searching Authority

ISA/US

Signature of Authorized Officer

For L. Mai

NGUYEN NGOC HO
INTERNATIONAL DIVISION

Form PCT/ISA/210 (second sheet) (Rev. 11-87)