(12) INTERNATIONAL APPLICATION PUBLISHED UNDER THE PATENT COOPERATION TREATY (PCT)

(19) World Intellectual Property Organization
International Bureau

(43) International Publication Date
1 July 2004 (01.07.2004)

PCT

(10) International Publication Number
WO 2004/055946 A1

(51) International Patent Classification[7]: H01R 13/514, 13/58

(21) International Application Number: PCT/US2003/034018

(22) International Filing Date: 28 October 2003 (28.10.2003)

(25) Filing Language: English

(26) Publication Language: English

(30) Priority Data:
10/317,690 12 December 2002 (12.12.2002) US

(71) Applicant: **3M INNOVATIVE PROPERTIES COMPANY** [US/US]; 3m Center, Post Office Box 33427, Saint Paul, MN 55133-3427 (US).

(72) Inventors: **SCHERER, Richard, J.**; Post Office Box 33427, Saint Paul, MN 55133-3427 (US). **CASTIGLIONE, Joseph, N.**; Post Office Box 33427, Saint Paul, MN 55133-3427 (US).

(74) Agents: **FLORCZAK, Yen, T.** et al.; Office Of Intellectual Property Counsel, Post Office Box 33427, Saint Paul, MN 55133-3427 (US).

(81) Designated States *(national)*: AE, AG, AL, AM, AT, AU, AZ, BA, BB, BG, BR, BY, BZ, CA, CH, CN, CO, CR, CU, CZ, DE, DK, DM, DZ, EC, EE, EG, ES, FI, GB, GD, GE, GH, GM, HR, HU, ID, IL, IN, IS, JP, KE, KG, KP, KR, KZ, LC, LK, LR, LS, LT, LU, LV, MA, MD, MG, MK, MN, MW, MX, MZ, NI, NO, NZ, OM, PG, PH, PL, PT, RO, RU, SC, SD, SE, SG, SK, SL, SY, TJ, TM, TN, TR, TT, TZ, UA, UG, UZ, VC, VN, YU, ZA, ZM, ZW.

(84) Designated States *(regional)*: ARIPO patent (GH, GM, KE, LS, MW, MZ, SD, SL, SZ, TZ, UG, ZM, ZW), Eurasian patent (AM, AZ, BY, KG, KZ, MD, RU, TJ, TM), European patent (AT, BE, BG, CH, CY, CZ, DE, DK, EE, ES, FI, FR, GB, GR, HU, IE, IT, LU, MC, NL, PT, RO, SE, SI, SK, TR), OAPI patent (BF, BJ, CF, CG, CI, CM, GA, GN, GQ, GW, ML, MR, NE, SN, TD, TG).

[Continued on next page]

(54) Title: CONNECTOR ASSEMBLY

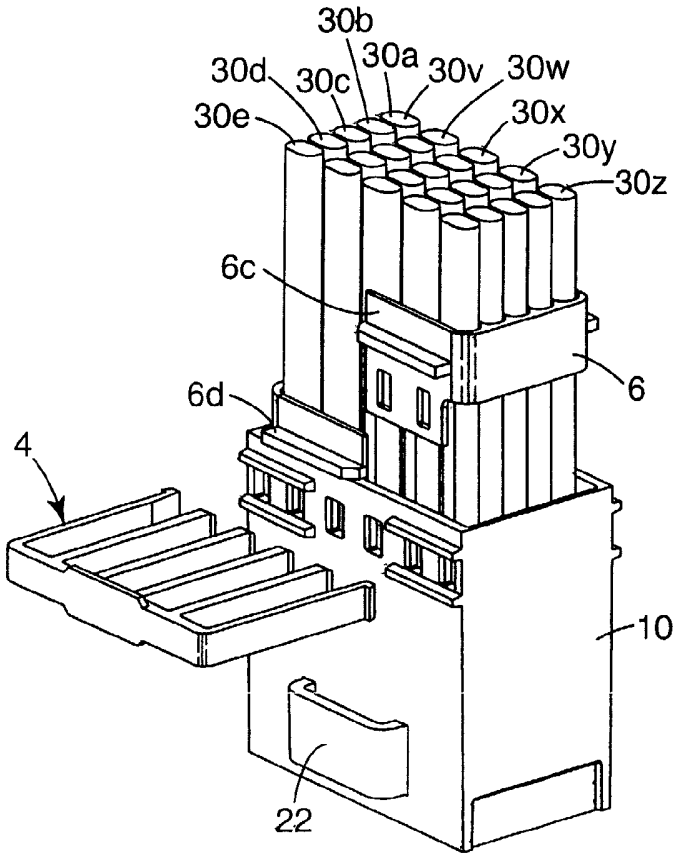

(57) Abstract: In one aspect, the invention relates to a carrier for use with an electrical connector assembly. The carrier comprises a housing, means for managing and securing terminated cable assemblies to the carrier, such as a combination of a clip and a cross-clip, and means for fastening a header onto the housing. The carrier provides controlled impedance and allows for quick and easy access to the header and the terminated cable assemblies in the event that replacement is necessary.

WO 2004/055946 A1

Declarations under Rule 4.17:

— *as to applicant's entitlement to apply for and be granted a patent (Rule 4.17(ii)) for all designations*

— *as to the applicant's entitlement to claim the priority of the earlier application (Rule 4.17(iii)) for all designations*

Published:

— *with international search report*

For two-letter codes and other abbreviations, refer to the "Guidance Notes on Codes and Abbreviations" appearing at the beginning of each regular issue of the PCT Gazette.

CONNECTOR ASSEMBLY

Technical Field

The present invention relates to a high speed connector. In particular, the present invention relates to a connector that provides for controlled impedance and allows for quick and easy replacement of components.

Background

Interconnection of integrated circuits to other circuit boards, cables or electronic devices is known in the art. Such interconnections typically have not been difficult to form, especially when the circuit switching speeds (also referred to as signal transmission times) have been slow when compared to the length of time required for a signal to propagate through a conductor in the interconnect or in the printed circuit board. As signal transmission times continue to increase with modern integrated circuits and related computer technology, the design and manufacture of interconnects that can perform satisfactorily has grown more difficult.

There is a growing need to design and manufacture electrical interconnects with closely controlled electrical characteristics to achieve satisfactory control of the signal integrity. The extent to which the electrical characteristics (such as impedance) can be controlled depends on the switching speed of the circuit, i.e., the faster the circuit switching speed, the greater the importance of providing an accurately controlled impedance within the interconnect.

Connectors have been developed to provide the necessary impedance control for high speed circuits, i.e., circuits with a transmission frequency of at least 5 GHz. Although many of these connectors are useful, there is still a need in the art for different and more economical connector designs that provide for easy component replacements.

Summary

The present invention pertains to a connector assembly designed to provide controlled impedance to maintain signal and ground integrity, and to allow for quick and easy assembly and disassembly for replacing components or for modifying or

upgrading with different components. In this way, the present invention provides economic advantages to the consumer in that only the selected component in the connector assembly needs to be replaced instead of replacing the entire assembly.

In one aspect, the present invention provides a carrier for use with an electrical connector assembly. The carrier comprises an insulating housing and means for securing the terminated cable assemblies. Optionally, the carrier further comprises a means for managing the terminated cable assemblies. In one exemplary embodiment, means for securing and means for managing the terminated cable assemblies are integrated. The housing includes a front vertical wall, laterally extending top and bottom walls, at least one set of carrier clip holes disposed on at least one of the top and bottom walls, and means for fastening a header to the housing.

In another aspect, the present invention provides another carrier for use with an electrical connector assembly. The carrier comprises an insulating housing having a front vertical wall and laterally extending top and bottom walls. The front vertical wall has an interior and an exterior surface. The housing also has at least one latch and at least one set of carrier clip holes, both disposed on at least one of the top and bottom walls. The carrier further comprises at least one clip having a back and plurality of ribs extending from the back. The clip is disposed in the housing such that the ribs mate with the carrier clip holes in the housing. In another exemplary embodiment, the carrier further comprises at least one cross-clip having at least one interference shoulder and a plurality of organizers. The cross-clip is disposed in the housing such that the interference shoulder rests against at least one of the top and bottom walls of the housing.

As discussed in detail below, the header, with its plurality of signal pins and ground blades, tends to be susceptible to damage. In the event that a header does become damaged or needs to be upgraded or modified, the connector assembly can be quickly disassembled so the header can be replaced. And, the connector assembly has been designed to allow for quick and easy replacement of the shielded electrical cable, if desired.

The above summary of the present invention is not intended to describe each disclosed embodiment or every implementation of the present invention. The Figures

and detailed description that follow below more particularly exemplify illustrative embodiments.

Brief Description of the Drawings

Figure 1 is an isometric view of an exemplary carrier in accordance with one aspect of the present invention;

Figures 2A and 2B are isometric views of an exemplary housing used in the carrier in accordance with another aspect of the present invention;

Figures 3A and 3B are isometric views of a carrier containing terminated cable assemblies in accordance with another aspect of the present invention;

Figure 4 is an isometric view of an exemplary terminated cable assembly that can be used in conjunction with the present invention;

Figure 5 is an isometric view of an exemplary header that can be used in conjunction with the present invention; and

Figure 6 is a perspective view of an exemplary high speed electrical connector assembly in a partially unassembled stage, in accordance with another aspect of the present invention.

These figures are idealized, not drawn to scale and are intended only for illustrative purposes.

Detailed Description

Figure **1** shows one embodiment of carrier **2** having housing **10** and means for securing and managing terminated cable assemblies, which can be mechanical devices that are used to hold and to maintain order in the terminated cable assemblies to minimizing their entanglement. Figure **1** shows one means for securing and managing the terminated cable assemblies, which includes clip **4** and cross-clip **6**. The carrier can be made by any conventional means, such as by injection molding.

Figures **2A** and **2B** show isometric views of the housing made from insulating material. Housing **10** contains a generally vertically-extending front wall **12** having interior surface **12a** and exterior surface **12b**. The front wall is formed to include a plurality of pin insertion apertures **12c** arranged in rows and columns. In between the pin insertion apertures are blade insertion apertures **12d** and supports **12e**, which are disposed on interior surface **12a**. The supports aid in the alignment of the terminated

cable assemblies described below. The housing also includes pair of laterally-extending top and bottom walls **14** and **16** respectively, each optionally having a series of guides **14a** and **16a**. Side walls **18**, with guides **18a**, also form part of the housing. On at least one of the laterally-extending top and bottom walls, there are a plurality of carrier clip holes **20** to accommodate means for securing and managing terminated cable assemblies. Also means to fasten a header is disposed on at least one of the top and bottom walls. As shown in Figure **2A**, one means to fasten the header to the housing is a latching device **22**, i.e., a device in which mating mechanical parts engage to fasten but usually not to lock the header to the housing.

Figures **3A** and **3B** show two different views of the carrier with terminated cable assemblies **30** mounted therein. These figures best show how means for securing and means for managing the terminated cable assemblies (i.e., the combination of clip **4** and cross-clip **6**) function in conjunction with housing **10**. The clip has a plurality of ribs **4b** extending laterally from back **4a**, optional snapping features **4c** on the end ribs and optional finger tab **4d** on at least one side of the back to aid in the assembly and disassembly of the clip from the carrier clip holes **20** disposed in housing **10**. In one embodiment, the number of ribs **4b** matches the number of holes **20**, although it is within the scope of the present invention to have a different number of ribs than holes, e.g., less ribs than holes. In one embodiment, where snapping feature **4c** is used, the length of the clip, as measured from back **4a** to the end of ribs **4b** is about the same length as that of the housing from the top wall **14** to the bottom wall **16** such that when the clip is attached to top wall **14** of the housing through holes **20**, snapping feature **4c** extends from bottom wall **16**. The clip is typically an integrally molded piece of insulating material.

Cross-clip **6** includes a plurality of organizers **6b**, and at least one end **6c**. Located on end **6c** is interference shoulder **6d**, and optionally a plurality of interlocking apertures **6e**. If two ends **6c** are used, the second end may or may not include the interference shoulder or the interlocking apertures. The width of the cross-clip, as measured from one end to the other, or if two ends are not used, from one end to the last organizer furthest away from the end, is about the same as the distance from top wall **14** to bottom wall **16** of the housing.

As shown in Figure **3B**, the cross-clip slides over the terminated cable assemblies **30** until interference shoulder **6d** on end **6c** abuts top wall **14** of the housing. In this case, ribs **6b** segregates rows **30a**, **30b**, **30c**, **30d**, and **30e** from one another and the interlocking apertures, if used, are aligned with carrier clip holes **20** on the housing **10**. If two ends **6c** are used, the interference shoulder on the second end would abut bottom wall **16** of the housing. Once the cross-clip has been installed so that the interference shoulder stops against at least one of the top or bottom walls, clip **4** is then installed such that ribs **4b** slide into holes **20** on the housing and back **4a** of the clip rests on top wall **14**. If two clips are used, the second clip rests on bottom wall **16** of the housing. As the clip slides into holes **20**, it also slides into interlocking apertures **6e** (if used) on the cross-clip, thereby holding it in place. Each of the four internal rib **4** (i.e., excluding the two end ribs) of the clip separates columns **30v**, **30w**, **30x**, **30y**, and **30z** of terminated cable assemblies. Although Figure **3B** shows an array of five columns and five rows of terminated cable assemblies, any number of columns and rows can be used and the designation of the column and the row are arbitrary, i.e., a column can be a row. With this design, a user can easily replace terminated cable assembly by removing clip **4** and cross-clip **6** and then removing the individual cable.

Figure **4** shows one exemplary embodiment of a terminated cable assembly that can be used in conjunction with the carrier. Terminated cable assembly **30** are conventional in design, except that each termination device **34** includes contact beam **36** on the top surface **34b** for making electrical contact with the ground blades in the header, discussed below. Electrical cable **32** is attached to termination device **34** through the use of solder openings **38**. The type of electrical cable used in this invention can be a single wire cable (e.g. single coaxial or single twin axial) or a multiple wire cable (e.g. multiple coaxial or multiple twin axial or twisted pair cables). In use, the terminated cable assemblies are inserted into housing **10** such that front face **34a** of termination devices **34** abuts interior surface **12a** of the front vertical wall of the housing **10.** Female contacts **40** lies along the longitudinal axis of the termination device and aligns with pin insertion apertures **12c** of the front vertical wall of the housing. Thus, a portion of the termination device rests on support **12d**. Top wall guide **14a** and bottom wall guide **16a** also help position the first and last termination device in the column.

Figure **5** shows an exemplary pin header **60** that can be used in the present invention. The header includes vertical front wall **62**, having interior surface **62a** and exterior surface **62b**, and laterally extending top and bottom walls **64** and **66** respectively. The vertical front wall is formed to include a plurality of pin insertion windows for signal pins **70** and a plurality of blade insertion windows for ground blades **68**. In use, the header is mated with the carrier **2** such that exterior surface **62b** of the header is in contact with exterior surface **12b** of the housing so that signal pins **70** and ground blades **68** slide through pin insertion apertures **12c** and blade insertion apertures **12d** respectively to mate with female contacts **40** and ground contacts **36** respectively of the terminated cable assembly. Another useful pin header that can be used in the present invention is disclosed in US Patent No. 6,146,202 (Ramey et al.), which is hereby incorporated by reference in its entirety.

Although Figure **4** shows that termination device **34** contains contact beam **36,** it is within the scope of the present invention to place the contact beam on the ground blade **68** in the header or on both termination device **34** and ground blade **68.**

Figure **6** shows a partially assembled high speed connector used in conjunction with printed circuit board (PCB) **80**. As shown, terminated cable assemblies **30** are attached to one side of the carrier while header **60** is attached on the other side. The header further includes means for fastening to the carrier. In this particular embodiment, the means for fastening is retaining clip **72** having tab **72a** and clip end **72b**. In use, tab **72a** of the retaining clip slides under latching device **22** on housing **10** to hold the header to the carrier.

In another embodiment, means for fastening the header to the carrier (having the terminated cable assemblies attached) is done through the use of sufficiently high friction force between the ground blades in the header to the termination device. Alternatively or in addition to this friction force, the header could be fastened to the carrier through sufficiently high friction force between the signal pins in the header and the female contacts in the terminated cable assemblies.

In the event that a header is damaged or needs to be upgraded or modified, it can be replaced by spreading clip ends **72b** apart, removing the existing header, and installing a new header. In this way, the present invention provides an economical and user friendly design that allows for replacement of headers. Although Figure **6** shows

several retaining clips **72** used with several latching devices **22** on the top wall of the housing, similar retaining clips and latching device combinations can be used on the bottom wall of the housing. Also, any number of header and carrier combinations can be used together even though two are shown. On PCB **80** is mounted a plurality of connector modules **90** assembled in socket **92**. The PCB, connector module, and socket are all in electrical communication the each other. If desired, optional male guides **94** can be added to socket **92** to help guide the socket into the header. In this case, the header would contain complimentary female guides (not shown). Useful connector modules and sockets are disclosed in US Patent No. 6,146,202 (Ramey et al.). As one skilled in the art will recognize, to complete the electrical circuit, the header/carrier/terminated cable assembly is mated to the socket. Although the above description recites a particular sequence to assemble the high speed connector, one skilled in the art will recognize that different assembly sequences can be used.

What is claimed is:

1. A carrier for use with an electrical connector assembly, said carrier comprising:

(a.) an insulating housing having a front vertical wall and laterally extending top and bottom walls, at least one latch, and at least one set of carrier clip holes disposed on at least one of said top and bottom walls,

(b.) at least one clip having plurality ribs extending from a back; said clip disposed in said housing such that said ribs mate with said carrier clip holes in said housing,

wherein said front vertical wall includes a plurality of pin insertion apertures disposed between rows and columns of blade insertion apertures and has interior and exterior surfaces;

2. The carrier of claim 1 further comprising at least one cross-clip having at least one end and a plurality of ribs wherein said end of said cross-clip has at least one interference shoulder and at least one interlocking aperture and wherein said cross-clip is disposed in said housing such that said interference shoulder rests against at least one of said top and bottom walls of said housing.

3. An electrical connector assembly comprising:

(a) the carrier of claim 1 or claim 2; and

(b) a plurality of terminated cable assemblies comprising an electrical cable attached to a termination device, wherein said termination device has a ground contact beam disposed on its top surface, a front face, and at least one female contact lying parallel to the longitudinal axis of the terminated cable assemblies,

wherein said terminated cable assemblies is disposed in said carrier such that said front face of said termination device is in contact with said internal surface of said housing.

4. The electrical connector assembly of claim 3 further comprising a header, said header comprising:

(a) a front vertical wall having an interior surface and an exterior surface; and

(b) an array of signal pins disposed between rows and columns of ground blades, wherein said signal pins and ground blades extend through said front vertical wall, and

wherein said header is disposed in said carrier such that said exterior surface of said header abuts said exterior surface of said carrier and said signal pins in said header advance through said front vertical wall of said housing to reside in said female contacts of said terminated cable assembly and said ground blades in said header advance through said front vertical wall of said housing to contact said ground contact on said termination device.

5. The electrical connector assembly of claim 4 further comprising means for fastening said carrier to said header.

6. The electrical connector assembly of claim 5 wherein said means for fastening comprises a latching device disposed on at least one of said top or bottom wall of said housing of said carrier and a retaining clip disposed on at least one of said top and bottom walls of said header.

7. The electrical connector assembly of claim 6 further comprising:

(a) a socket mated to said interior surface of said vertical wall of said header;

(b) a plurality of connector modules attached to said socket; and

(c) a printed circuit board attached to said connector modules, wherein said printed circuit board, connector modules, socket, header, carrier, and terminated cable assembly are in electrical communication.

8. An electrical connector assembly comprising:

(a) the carrier of claim 1 or 2;

(b) a plurality of terminated cable assemblies comprising an electrical cable attached to a termination device, wherein said termination device has a front face and at least one female contact lying parallel to the longitudinal axis of the terminated cable assemblies, and wherein said terminated cable assemblies is disposed in said carrier

such that said front face of said termination device is in contact with said internal surface of said housing.

9. The electrical connector assembly of claim 8 further comprising a header, said header comprising:

(a) a front vertical wall having an interior surface and an exterior surface; and

(b) an array of signal pins disposed between rows and columns of ground blades having a contact beam, wherein said signal pins and said ground blades extend through said front vertical wall, and

wherein said header is disposed in said carrier such that said exterior surface of said header abuts said exterior surface of said carrier and said signal pins in said header advance through said front vertical wall of said housing to reside in said female contacts of said terminated cable assembly and said ground blades in said header advance through said front vertical wall of said housing to contact said termination device.

10. The electrical connector assembly of claim 9 further comprising:

(a) a socket mated to said interior surface of said vertical wall of said header;

(b) a plurality of connector modules attached to said socket; and

(c) a printed circuit board attached to said connector modules, wherein said printed circuit board, connector modules, socket, header, carrier, and terminated cable assembly are in electrical communication.

11. The electrical assembly of claim 3 further comprising a header, said header comprising:

(a) a front vertical wall having an interior surface and an exterior surface; and

(b) an array of signal pins disposed between rows and columns of ground blades having a contact beam, wherein said signal pins and said ground blades extend through said front vertical wall,

wherein said header is disposed in said carrier such that said exterior surface of said header abuts said exterior surface of said carrier and said signal pins in said header advance through said front vertical wall of said housing to reside in said female

contacts of said terminated cable assembly and said ground blades in said header advance through said front vertical wall of said housing to contact said ground contact beam on said termination device.

12. The electrical connector assembly of claim 11 further comprising:

(a) a socket mated to said interior surface of said vertical wall of said header;

(b) a plurality of connector modules attached to said socket; and

(c) a printed circuit board attached to said connector modules, wherein said printed circuit board, connector modules, socket, header, carrier, and terminated cable assembly are in electrical communication.

13. A carrier for use with an electrical connector assembly, said carrier comprising:

(a) an insulating housing having a front vertical wall and laterally extending top and bottom walls, at least one latch and at least one set of carrier clip holes disposed on at least one of said top and bottom walls,

wherein said front vertical wall includes a plurality of pin insertion apertures disposed between rows and columns of blade insertion apertures and having interior surface and exterior surfaces; and

(b) means for securing terminated cable assemblies; and

(c) means for fastening a header onto said housing.

14. The carrier of claim 13 further comprising means for managing said terminated cable assemblies.

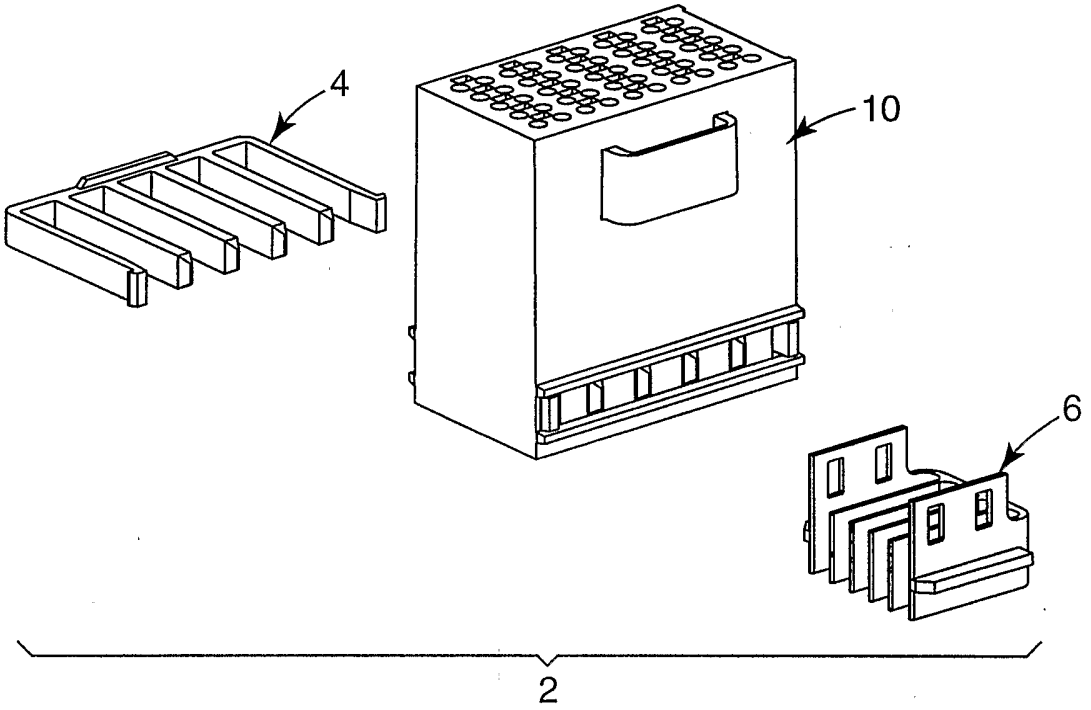

Fig. 1

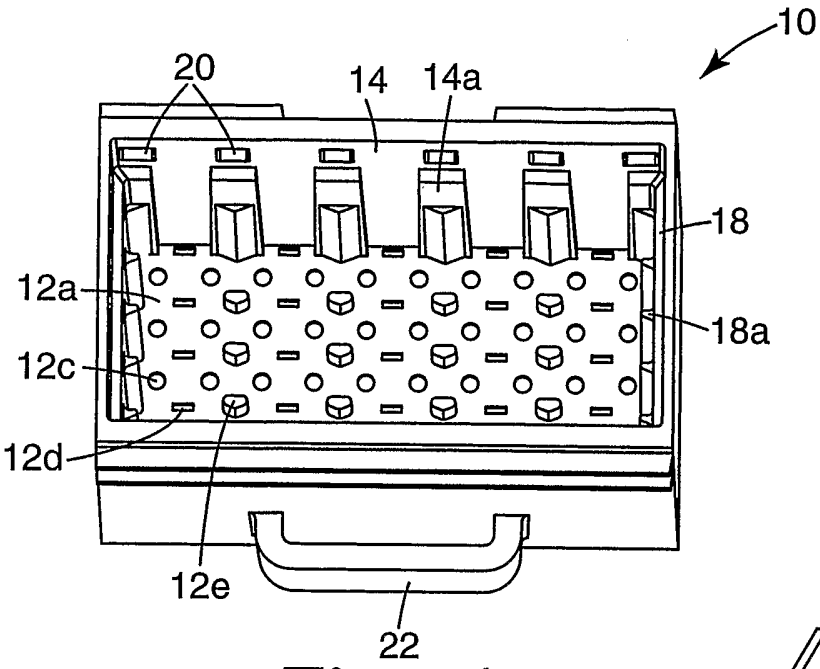
10
20
14
14a
18
12a
18a
12c
12d
12e
22

Fig. 2A

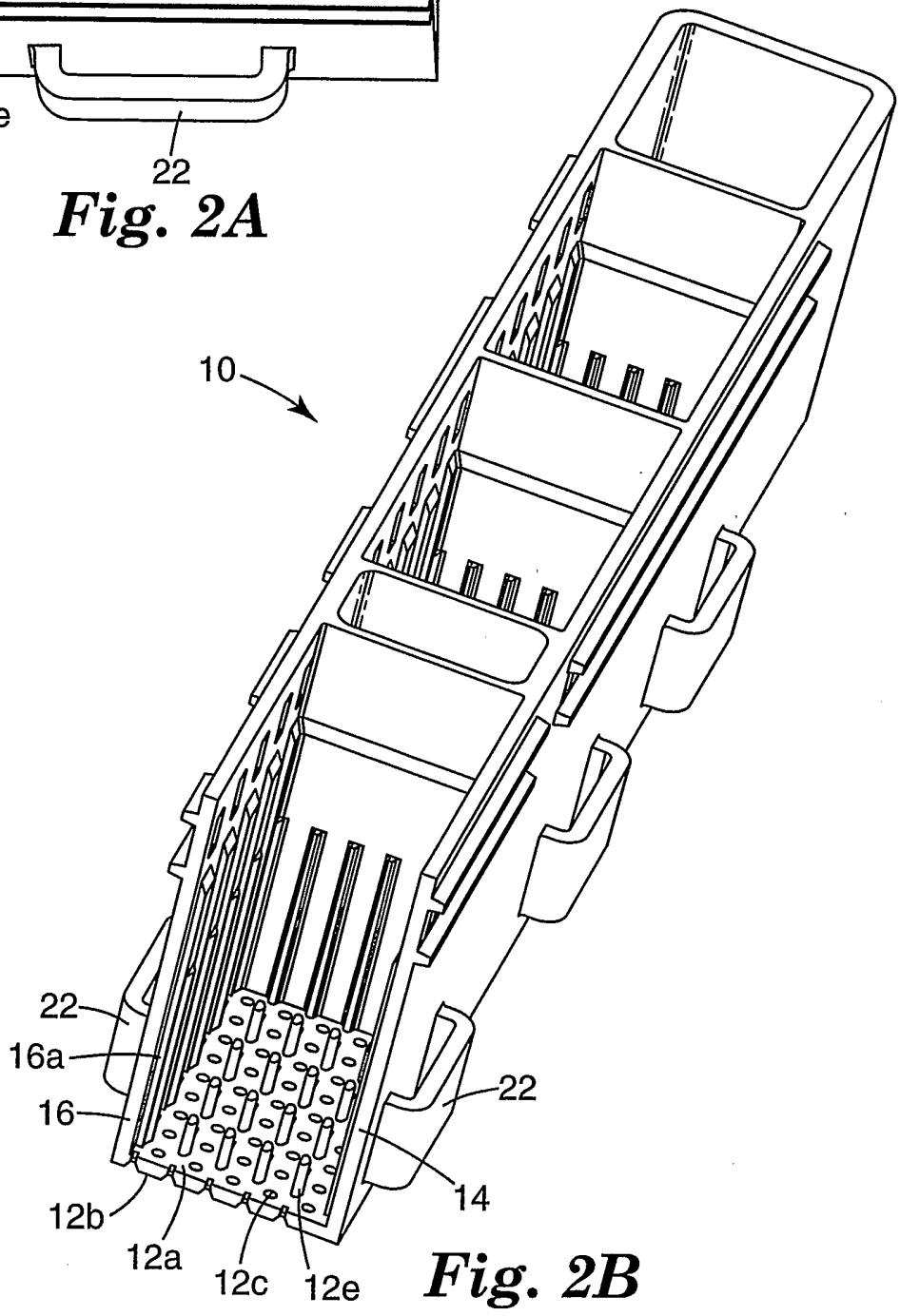
10
22
16a
16
22
14
12b
12a
12c
12e

Fig. 2B

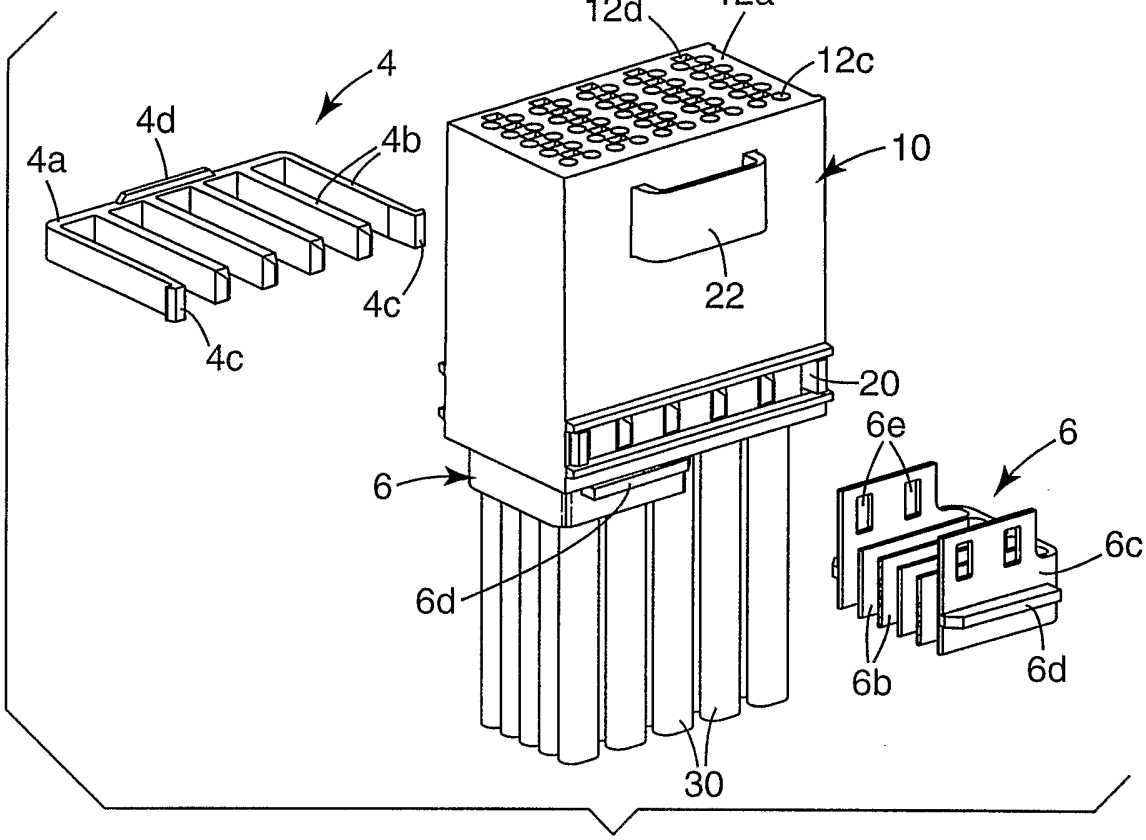
12d
12a
12c
4
4d
4a
4b
10
22
4c
4c
20
6e
6
6
6c
6d
6b
6d
30

Fig. 3A

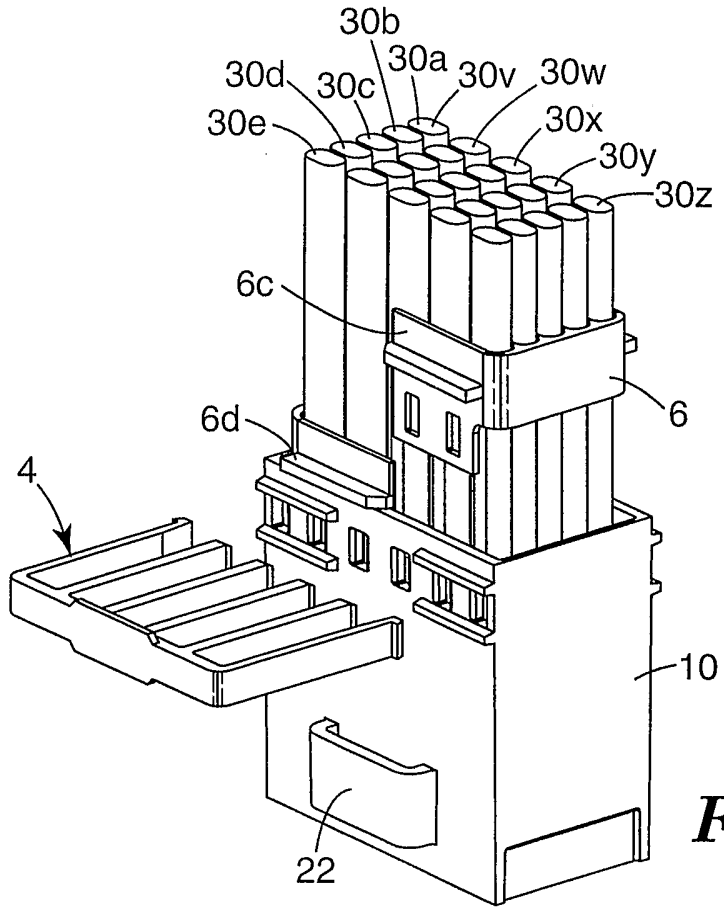
30b
30d
30c
30a
30v
30w
30e
30x
30y
30z
6c
6
6d
4
10
22

Fig. 3B

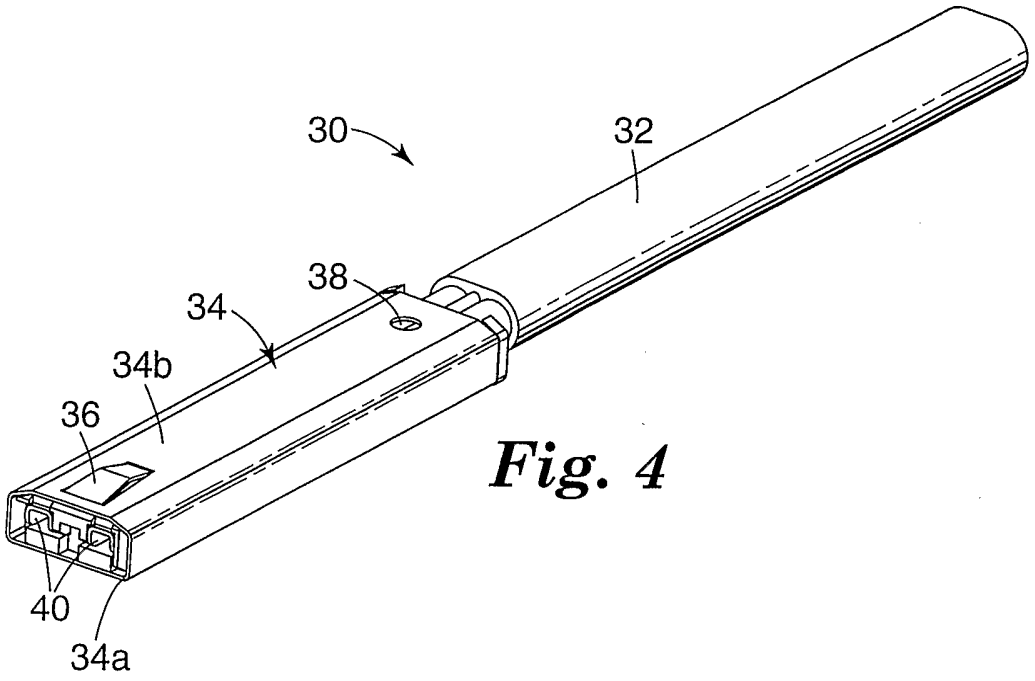

Fig. 4

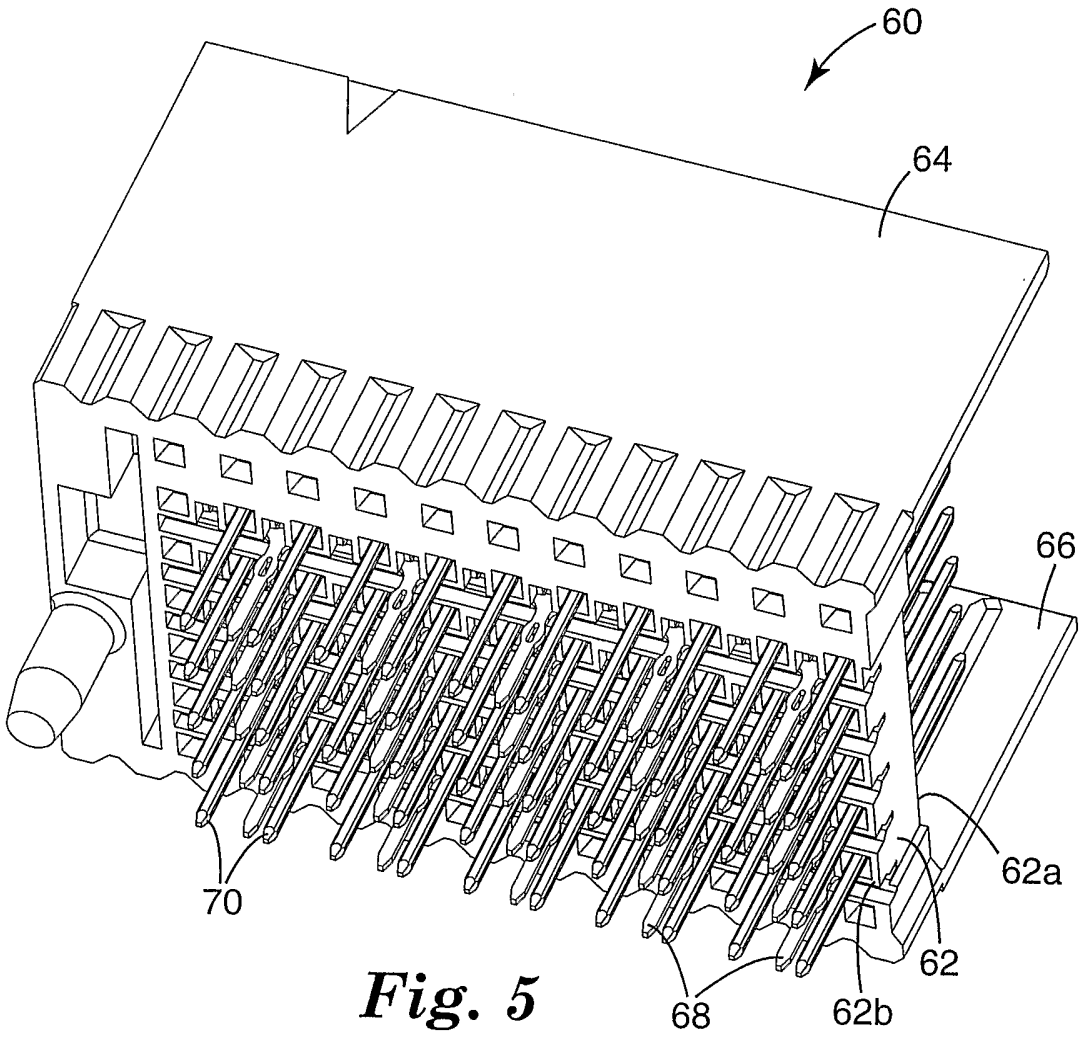

Fig. 5

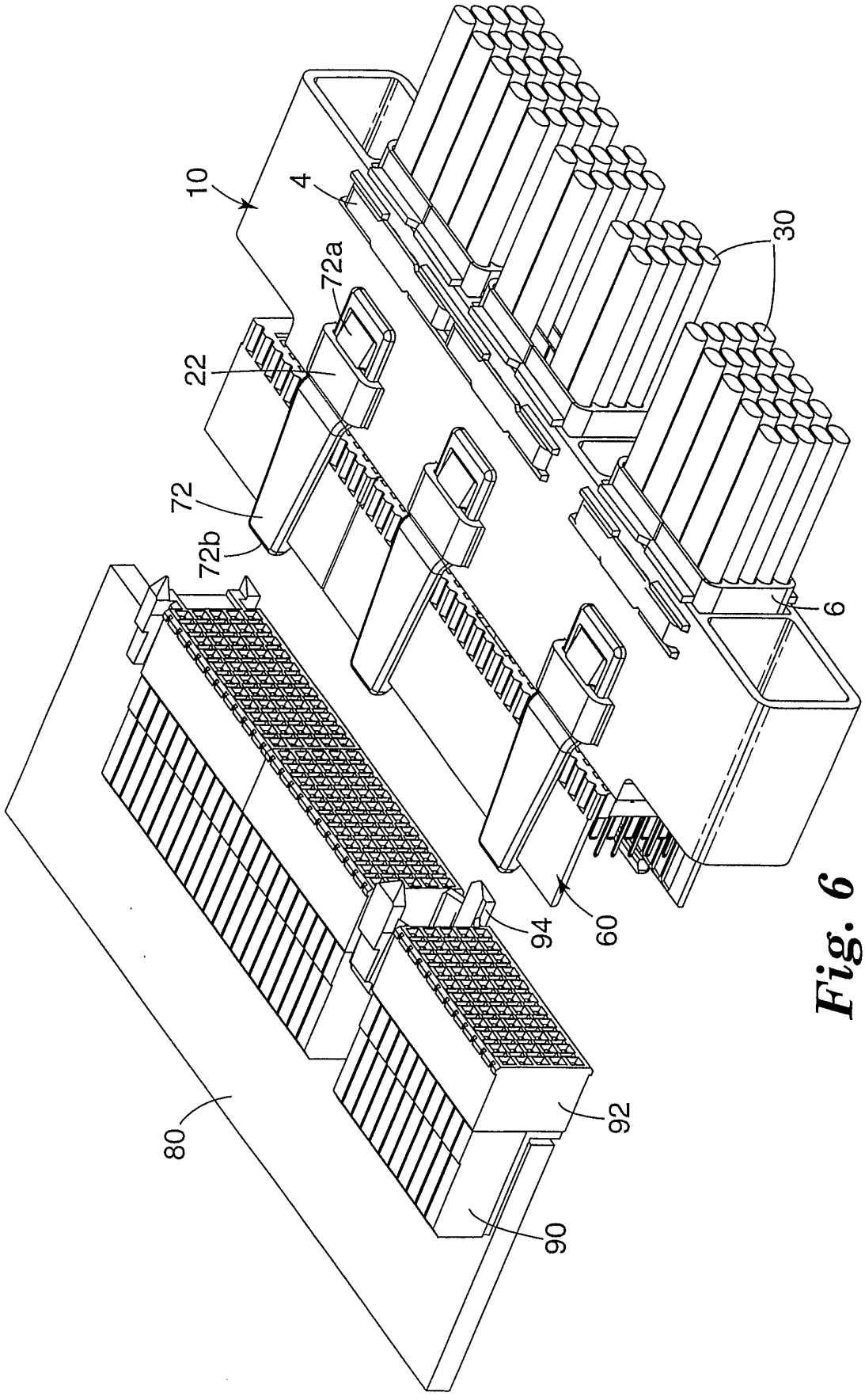

Fig. 6

INTERNATIONAL SEARCH REPORT

Internatio plication No
PCT/US 03/34018

A. CLASSIFICATION OF SUBJECT MATTER
IPC 7 H01R13/514 H01R13/58

According to International Patent Classification (IPC) or to both national classification and IPC

B. FIELDS SEARCHED

Minimum documentation searched (classification system followed by classification symbols)
IPC 7 H01R

Documentation searched other than minimum documentation to the extent that such documents are included in the fields searched

Electronic data base consulted during the international search (name of data base and, where practical, search terms used)
EPO-Internal

C. DOCUMENTS CONSIDERED TO BE RELEVANT

Category °	Citation of document, with indication, where appropriate, of the relevant passages	Relevant to claim No.
Y	US 5 788 519 A (STERN ERIC JOSEPH) 4 August 1998 (1998-08-04) column 5, line 22 - line 43; figure 1	1,13,14
Y	WO 88 02560 A (OHIO ASS ENTERPRISES INC) 7 April 1988 (1988-04-07) column 9, line 43 -column 10, line 5; figures 2,3	1,13,14
A	EP 0 343 561 A (BURNDY CORP) 29 November 1989 (1989-11-29) page 21, last paragraph -page 23, paragraph 1; figures 1-29	1,3-14

☐ Further documents are listed in the continuation of box C.

☒ Patent family members are listed in annex.

° Special categories of cited documents :

"A" document defining the general state of the art which is not considered to be of particular relevance

"E" earlier document but published on or after the international filing date

"L" document which may throw doubts on priority claim(s) or which is cited to establish the publication date of another citation or other special reason (as specified)

"O" document referring to an oral disclosure, use, exhibition or other means

"P" document published prior to the international filing date but later than the priority date claimed

"T" later document published after the international filing date or priority date and not in conflict with the application but cited to understand the principle or theory underlying the invention

"X" document of particular relevance; the claimed invention cannot be considered novel or cannot be considered to involve an inventive step when the document is taken alone

"Y" document of particular relevance; the claimed invention cannot be considered to involve an inventive step when the document is combined with one or more other such documents, such combination being obvious to a person skilled in the art.

"&" document member of the same patent family

Date of the actual completion of the international search	Date of mailing of the international search report
16 March 2004	24/03/2004

Name and mailing address of the ISA	Authorized officer
European Patent Office, P.B. 5818 Patentlaan 2 NL – 2280 HV Rijswijk Tel. (+31-70) 340-2040, Tx. 31 651 epo nl, Fax: (+31-70) 340-3016	Tappeiner, R

1

INTERNATIONAL SEARCH REPORT

Information on patent family members

Internati pplication No
PCT/US 03/34018

Patent document cited in search report		Publication date	Patent family member(s)		Publication date
US 5788519	A	04-08-1998	NONE		
WO 8802560	A	07-04-1988	US	4897046 A	30-01-1990
			CA	1290417 C	08-10-1991
			EP	0327571 A1	16-08-1989
			JP	2501870 T	21-06-1990
			KR	9506019 B1	07-06-1995
			WO	8802560 A1	07-04-1988
			US	4964814 A	23-10-1990
EP 0343561	A	29-11-1989	US	4889500 A	26-12-1989
			CA	1298367 C	31-03-1992
			DE	68920629 D1	02-03-1995
			DE	68920629 T2	18-05-1995
			EP	0343561 A2	29-11-1989
			EP	0573078 A1	08-12-1993
			ES	2066803 T3	16-03-1995
			JP	2066860 A	06-03-1990
			JP	2791099 B2	27-08-1998