(12) INTERNATIONAL APPLICATION PUBLISHED UNDER THE PATENT COOPERATION TREATY (PCT)

(19) World Intellectual Property Organization
International Bureau

(43) International Publication Date
25 June 2009 (25.06.2009)

PCT

(10) International Publication Number
WO 2009/079217 A3

(51) International Patent Classification:
B08B 13/00 (2006.01)

(21) International Application Number:
PCT/US2008/085480

(22) International Filing Date:
4 December 2008 (04.12.2008)

(25) Filing Language: English

(26) Publication Language: English

(30) Priority Data:
12/002,981 19 December 2007 (19.12.2007) US

(71) Applicant *(for all designated States except US)*: **UNITED TECHNOLOGIES CORPORATION** [US/US]; United Technologies Building, Hartford, CT 06101 (US).

(72) Inventors; and

(75) Inventors/Applicants *(for US only)*: **RICE, Robert, M.** [US/US]; 8503 Camille Drive, Huntsville, AL 35802 (US). **DIAMOS, David, G.** [US/US]; 42 Buckingham Street, Apt. #1, Hartford, CT 06106 (US). **WELCH, William, J.** [US/US]; 17 Overshore Drive West, Madison, CT 06443 (US).

(74) Agent: **KELMACHTER, Barry, L.**; Bachman & LaPointe, P.C., 900 Chapel Street, Suite 1201, New Haven, CT 06510-2802 (US).

(81) Designated States *(unless otherwise indicated, for every kind of national protection available)*: AE, AG, AL, AM, AO, AT, AU, AZ, BA, BB, BG, BH, BR, BW, BY, BZ, CA, CH, CN, CO, CR, CU, CZ, DE, DK, DM, DO, DZ, EC, EE, EG, ES, FI, GB, GD, GE, GH, GM, GT, HN, HR, HU, ID, IL, IN, IS, JP, KE, KG, KM, KN, KP, KR, KZ, LA, LC, LK, LR, LS, LT, LU, LY, MA, MD, ME, MG, MK, MN, MW, MX, MY, MZ, NA, NG, NI, NO, NZ, OM, PG, PH, PL, PT, RO, RS, RU, SC, SD, SE, SG, SK, SL, SM, ST, SV, SY, TJ, TM, TN, TR, TT, TZ, UA, UG, US, UZ, VC, VN, ZA, ZM, ZW.

(84) Designated States *(unless otherwise indicated, for every kind of regional protection available)*: ARIPO (BW, GH, GM, KE, LS, MW, MZ, NA, SD, SL, SZ, TZ, UG, ZM, ZW), Eurasian (AM, AZ, BY, KG, KZ, MD, RU, TJ, TM), European (AT, BE, BG, CH, CY, CZ, DE, DK, EE,

[Continued on next page]

(54) Title: EFFLUENT COLLECTION UNIT FOR ENGINE WASHING

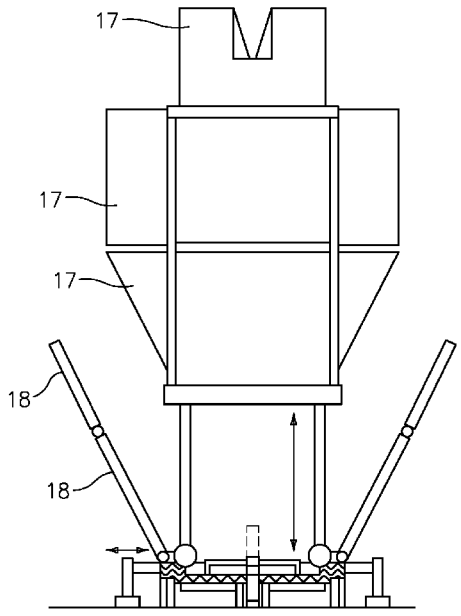

FIG. 10

(57) Abstract: An effluent collection unit (10) for engine washing is formed by a portable trailer (12) having a plurality of sides (15, 18, 20) forming an internal compartment (30) and an effluent collection system (50) positioned within the internal compartment, which effluent collection device captures engine wash water effluent when the trailer is placed in an operational configuration.

WO 2009/079217 A3

ES, FI, FR, GB, GR, HR, HU, IE, IS, IT, LT, LU, LV, MC, MT, NL, NO, PL, PT, RO, SE, SI, SK, TR), OAPI (BF, BJ, CF, CG, CI, CM, GA, GN, GQ, GW, ML, MR, NE, SN, TD, TG).

Published:

— *with international search report (Art. 21(3))*

(88) Date of publication of the international search report:
22 October 2009

INTERNATIONAL SEARCH REPORT

International application No.
PCT/US 08/85480

A. CLASSIFICATION OF SUBJECT MATTER
IPC(8) - B08B 13/00 (2009.01)
USPC - 134/104.2, 123
According to International Patent Classification (IPC) or to both national classification and IPC

B. FIELDS SEARCHED

Minimum documentation searched (classification system followed by classification symbols)
USPC - 134/104.2, 123

Documentation searched other than minimum documentation to the extent that such documents are included in the fields searched
USPC 29/428; 55/440; 134/10, 18, 19, 20, 22.1, 22.11, 22.12, 22.13, 22.14, 22.17, 22.18, 26, 28, 29, 31, 32, 33, 34, 36, 37, 38, 39, 40, 41, 42,45, 65, 104.2, 104.4, 107, 109, 110, 111, 123, 132, 134, 137, 140, 141, 166, 166C, 166R, 168C, 167C, 168C, 169A, 169C, 169P

Electronic data base consulted during the international search (name of data base and, where practicable, search terms used)
Google.com, freepatentsonline.com, PubPair, PubWEST: absorption, adjustable, adsorb$, advisory, aircraft, airport, american, back, bar, base, box, cart, carton, channel, chute, circular, clean$, closed, collection,, connect$, container, contamin$, cover, david, deployed, *diamos, drive, ecopower, effluent, end, engine, expend*

C. DOCUMENTS CONSIDERED TO BE RELEVANT

Category*	Citation of document, with indication, where appropriate, of the relevant passages	Relevant to claim No.
Y	US 2006/0219269 A1 (Rice et al.) 05 October 2006 (05.10.2006), entire document, esp. Abstract, Fig 1, 6, and para [0021-37].	1-19
Y	US 5,899,217 A (Testman, Jr.) 04 May 1999 (04.05.1999), entire document, esp. Fig 2, col 9 ln 4-25.	16
Y	US 6,565,758 B1 (Thomas) 20 May 2003 (20.05.2003), entire document, esp. Fig 1, col 4 ln 22-45.	11, 12, 15
Y	US 7,297,260 B2 (Hjerpe et al.) 20 November 2007 (20.10.2007), entire document, esp. Fig 3, 5, 6, and 7, col 8 ln 60-67.	5-10
Y	US 5,152,545 A (Hupperts et al.) 6 October 1992 (06.10.1992), entire document, esp. Fig 1, 3, 4, and col 2 ln 36-41.	12
Y	49 CFR 571.108, FEDERAL MOTOR VEHICLE SAFETY STANDARDS, [online]01 October 2007 (01.10.2007) [retrieved on 2009-05-07]. Retrieved from the Internet: <URL: http://frwebgate.access.gpo.gov/cgi-bin/get-cfr.cgi> Entire document, esp. Table 1.	13
Y	29 CFR 1926.601(b), REGULATIONS RELATING TO LABOR, OCCUPATIONAL SAFETY AND HEALTH ADMINISTRATION, SAFETY AND HEALTH REGULATIONS FOR CONSTRUCTION, MOTOR VEHICLES, MECHANIZED EQUIPMENT, AND MARINE OPERATIONS, Motor vehicles, [online] December 2005 (12.2005), [retrieved on 2009-05-07]. Retrieved from the Internet: <URL: http://cfr.vlex.com/vid/1926-601-motor-vehicles-19689298>. Entire document, esp. 29 CFR 1926.601(b)(13)(i).	13

☒ Further documents are listed in the continuation of Box C. ☐

* Special categories of cited documents:
"A" document defining the general state of the art which is not considered to be of particular relevance
"E" earlier application or patent but published on or after the international filing date
"L" document which may throw doubts on priority claim(s) or which is cited to establish the publication date of another citation or other special reason (as specified)
"O" document referring to an oral disclosure, use, exhibition or other means
"P" document published prior to the international filing date but later than the priority date claimed
"T" later document published after the international filing date or priority date and not in conflict with the application but cited to understand the principle or theory underlying the invention
"X" document of particular relevance; the claimed invention cannot be considered novel or cannot be considered to involve an inventive step when the document is taken alone
"Y" document of particular relevance; the claimed invention cannot be considered to involve an inventive step when the document is combined with one or more other such documents, such combination being obvious to a person skilled in the art
"&" document member of the same patent family

Date of the actual completion of the international search	Date of mailing of the international search report
07 May 2009 (07.05.2009)	19 MAY 2009
Name and mailing address of the ISA/US Mail Stop PCT, Attn: ISA/US, Commissioner for Patents P.O. Box 1450, Alexandria, Virginia 22313-1450 Facsimile No. 571-273-3201	Authorized officer: Lee W. Young PCT Helpdesk: 571-272-4300 PCT OSP: 571-272-7774

INTERNATIONAL SEARCH REPORT

International application No.
PCT/US 08/85480

C (Continuation). DOCUMENTS CONSIDERED TO BE RELEVANT

Category*	Citation of document, with indication, where appropriate, of the relevant passages	Relevant to claim No.
Y	US 6,945,343 B1 (Moreau et al.), 20 September 2005 (20.09.2005), entire document, esp. col 2 ln 6-30.	19
Y	US 5,026,112 A (Rice) 25 June 1991 (25.06.1991), entire document, esp. Abstract, fig 1 and 2, col 2 ln 35-40, col 3 ln 65-67.	1-19
Y	US 2006/0186186 A1 (Kuhn et al.) 24 August 2006 (24.08.2006), entire document, esp. Fig 1 and 2, para [0015].	3, 4
Y	US 2005/0248208 A1 (Boon) 10 November 2005 (10.11.2005), *entire document, esp. Fig 3,* para [0017].	3, 4, 18