Oct. 3, 1944. R. P. BALLOU 2,359,605

RESILIENT REMOVABLE CONTACT MEMBER

Filed Nov. 8, 1941

Fig. 1

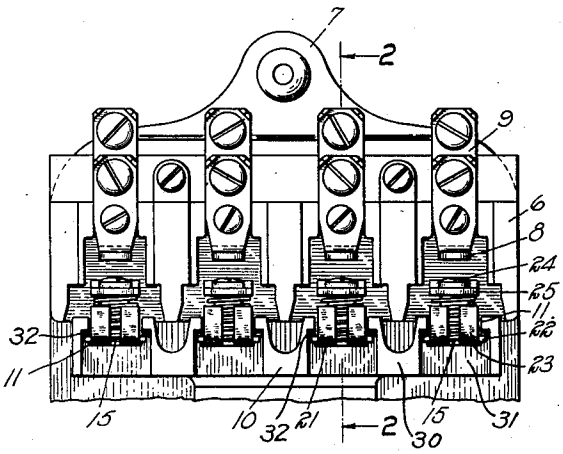

Fig. 2

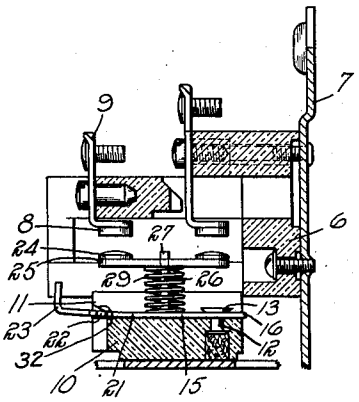

Fig. 3

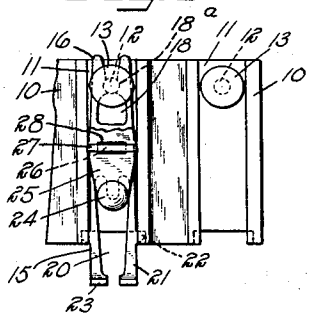

Fig. 4

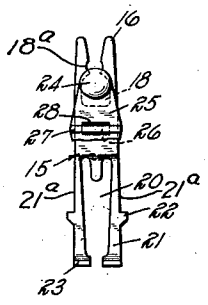

Fig. 5

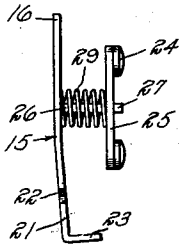

Fig. 6

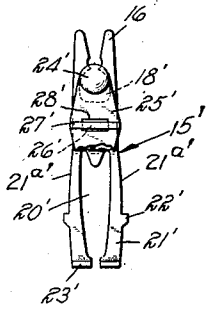

Fig. 7

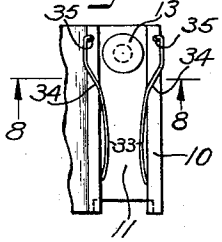

Fig. 8

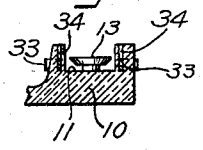

Inventor

Richard P. Ballou

By S. Jay Teller

Attorney

Patented Oct. 3, 1944 2,359,605

UNITED STATES PATENT OFFICE

2,359,605

RESILIENT REMOVABLE CONTACT MEMBER

Richard P. Ballou, West Hartford, Conn., assignor, by mesne assignments, to Federal Electric Products Company, Inc., Newark, N. J., a corporation of New Jersey

Application November 8, 1941, Serial No. 418,292

12 Claims. (Cl. 200—166)

The present invention relates to improvements in means to detachably secure removable contact carriers to supporting members therefor embodied in various types of electrical switches. The invention is particularly adaptable for use in switches of the magnetic motor starter type.

Primarily, the attaching means embodied in the present invention are an improvement over the attaching means disclosed in a patent application of Paul M. Christensen, Ser. No. 373,188, filed January 4, 1941. In said application, readily detachable means are provided to secure the contact carrier to a supporting member therefor. Said securing means effectively maintain the contact carrier on the supporting member in proper operative position, and while said securing means function satisfactorily, it has been found that the attaching of the contact carrier to the supporting member is greatly facilitated and improved by incorporating in said structure the embodiments of the present invention.

This invention has for its primary object the provision of resilient means to accurately position all portions of a contact carrier on a supporting member therefor, whereby the contact carrier may be quickly attached to or detached from said supporting member and, when attached thereto, the contact carrier is held on said supporting member without any appreciable movement in any direction of any portion of said contact carrier per se with respect to said supporting member. The contact member, mounted on said carrier, is movable with respect to said carrier and supporting member as in the structure illustrated in said application Ser. No. 373,188.

Other and further objects and advantages of the invention will be apparent from the following specification to those skilled in the art.

The accompanying drawing shows the embodiment of the invention which is deemed preferable, but it will be understood that the drawing is intended for illustrative purposes only and is not to be construed as defining or limiting the scope of the invention, the claims forming a part of this specification being relied upon for that purpose.

In the accompanying drawing,

Fig. 1 is a fragmentary front elevational view of a switch embodying as a part thereof the construction of a plurality of removable contact carriers mounted on a supporting member provided therefor.

Fig. 2 is a sectional side elevation on the line 2—2 of Fig. 1.

Fig. 3 is a fragmentary top plan view of the supporting member with one contact carrier attached thereto.

Fig. 4 is a top plan view of a contact carrier per se such as illustrated in Fig. 3, with a part of the contact member removed.

Fig. 5 is a side elevation of said contact carrier.

Fig. 6 is a top plan view similar to Fig. 4 of another embodiment of a contact carrier per se.

Fig. 7 is a fragmentary top plan view of a supporting member illustrating another embodiment of the invention.

Fig. 8 is a sectional vertical elevation on the line 8—8 in Fig. 7.

In the means for attaching the contact carriers to the supporting member illustrated in above-mentioned application Ser. No. 373,188, it has been found that, due to irregularities occurring in the molded supporting member, the contact carriers do not always tightly engage the positioning members provided on the supporting member for the outermost ends of the contact carrier as viewed in Fig. 2 when the same is attached to the supporting member. As a result, a certain amount of vertical or horizontal movement of said outermost end of said contact carrier with respect to said supporting member takes place and in some instances both horizontal and vertical movement occurs. Such movement is objectionable in the operation of the switch member in which the contact carriers are mounted since considerable noise and unnecessary wear of the parts occur as a result of this movement. Accordingly, the present invention was developed to prevent the occurrence of such noise and unnecessary wear by providing a firm, though resilient, engagement between the contact carriers and the supporting member on which they are mounted whereby any appreciable movement between the contact carriers and the supporting member is substantially prevented.

Essentially, the contact carrier comprises an elongated member which is bifurcated at one end to afford resilient means engageable with a headed pin affixed to the supporting member to detachably secure the innermost or forward end of the contact carrier to the supporting member and principally prevent separative movement in a direction which is longitudinal of the contact carrier and its seat on the supporting member. These securing means are the same as employed in the structure illustrated in said application Ser. No. 373,188. The present invention primarily comprises the formation of a bifurcation in

the outermost or rear end of the contact carrier to provide, in the preferred embodiment of the invention, a pair of resilient arms having portions of the outer sides diverging rearward to form cam-like or wedging surfaces adapted to resiliently engage upstanding members on the supporting member whereby horizontal movement of the rear end of the contact carrier is prevented.

In addition, the arms are bent upward slightly with respect to the remainder of the carrier and lugs are provided on the outer edges of the resilient arms, which lugs extend outward horizontally and are engageable under inward and downward inclined surfaces on the upstanding members formed on said supporting member whereby, when the contact carrier is mounted in operative position on the supporting member, the engagement of the lugs on the resilient arms with said inclined surfaces on the upstanding members will prevent vertical movement of the rear end of the contact carrier.

Referring to the drawing, only as much of the switch construction as is necessary to illustrate the principles of the present invention has been shown. The insulating base 6 of a motor starter type switch is shown mounted on a back plate 7 by suitable means. The base 6 supports stationary contacts 8 which are electrically connected with terminals 9. A movable supporting member 10, preferably formed of insulating material, is operable by an armature not illustrated herein but clearly shown in said application Ser. No. 373,188. A plurality of grooves 11 are formed in the upper face of the supporting member 10, which grooves have substantially vertical or upstanding side walls when considered with the switch in the position shown in Fig. 1.

It is to be understood that while the grooves 11 are herein illustrated as being separated by upstanding members which are substantially coextensive with said grooves, the invention is not necessarily to be so restricted, since the innermost portions of the upstanding members may be eliminated, if desired, leaving sufficient of said upstanding members to form surfaces with which portions of the contact carrier, to be described, may coengage.

Adjacent the innermost end of each groove, a pin 12 is securely mounted having a head 13 formed on the upper end thereof, the under side of said head being spaced from the base of the groove 11 a distance sufficient to accommodate a contact carrier to be described.

A plurality of contact carriers 15 are provided to be mounted, one in each groove 11. The securing means to hold the contact carriers in the grooves will now be described, using a single contact carrier as an example for all.

The contact carrier 15 is elongated and is preferably formed of metal, although any other suitable material may be used. The carrier at its forward end, which is innermost when mounted on the supporting member, as viewed in Fig. 2, is bifurcated to provide a pair of resilient fingers 16. The bifurcation includes an enlargement 18 to render the fingers 16 resiliently yieldable. The fingers 16 are also provided with oppositely disposed concave notches 18a adapted to receive the pin 12 and resiliently engage the same to properly secure the contact carrier to the supporting member at the forward end of the contact carrier and properly position the contact carrier longitudinally of the groove 11. These interengaging means principally secure the contact member and the supporting member against movement longitudinally of the contact carrier and the groove in which it is seated but the pin 12 and head 13 also secure the forward end of the carrier against any substantial movement transversely and vertically in the groove.

The securing means thus far described are the same as illustrated in said above-mentioned application Ser. No. 373,188, and the manner of coengaging and disengaging said securing means is also the same as described in said application.

In order that the rear or outermost end portion of the contact carrier may be properly positioned within the groove 11 on the supporting member 10, without permitting appreciable movement between said rear end and the upstanding walls of the groove, the rear end is bifurcated by a slot 20 extending inward from said end of the contact carrier 15 to provide resilient portions illustrated as a pair of arms 21 which are yieldable with respect to the remaining portion of contact carrier 15.

The resilient or yieldable arms 21 are bent slightly out of alignment with the plane of the remaining portion of the contact carrier 15, as clearly shown in Fig. 5, for purposes to be later explained.

The outer sides of a portion of said arms 21 diverge outward toward the rear of the contact carrier when in operative position to provide camming or wedging surfaces 21a. The outer surfaces of arms 21 are each also provided with outward extending lugs or projections 22 which are horizontal when the contact carrier on which the contact is mounted is in the position illustrated in Fig. 1. The outermost ends of the arms 21 are bent substantially at a right angle to said arms to provide finger engaging means 23 by which the contact carrier is readily moved with respect to the supporting member 10.

Contacts 24 are mounted on a contact member 25. A stem 26 is fixed to the contact carrier 15 and extends substantially normally thereto. The end of the stem opposite to that secured to the contact carrier 15 is provided with a head 27 extending crosswise of the contact carrier. Contact member 25 is provided with an aperture 28 that is larger than the cross-sectional area of the stem 26, which aperture loosely receives the stem 26 whereby a certain amount of play is provided between the contact member 25 and the stem 26. A coil spring 29 surrounds the post 26 and resiliently urges the contact member 25 away from the contact carrier 15 and against the head 27. The resilient mounting of the contact member 25 is for purposes of permitting yieldable engagement between contacts 8 and 24 of the switch member.

The outermost vertical side 30 of the supporting member 10 is provided with a vertical recess 31 for each groove 11, which recess extends upward from the bottom of said vertical side and terminates short of the top of the upstanding sides of the grooves 11. The recesses 31 are aligned with the grooves 11 and are wider than said grooves. The uppermost ends of the recesses 31 terminate in laterally projecting, inclined surfaces 32 which extend downward and rearward from the vertical side 30 toward the base of the groove 11.

When the contact carrier 15 is inserted into the groove 11, the fingers 16 will move inward, past the pin 12; the camming surfaces 21a will engage against the upstanding sides of the grooves 11 adjacent the outer ends thereof to

force the ends of arms 21 slightly toward each other and effect resilient contact between said upstanding sides and the rear end of the contact carrier to prevent movement of the outer end of said contact carrier in a direction which is horizontal when the switch is mounted in the position shown in Fig. 1; and, just before the contact carrier reaches its innermost position at which time the recesses 18a engage about the pins 12, the lugs 22 will resiliently engage the inclined surfaces 32 to prevent movement of the outer end of said contact carrier in a direction which will be vertical when the switch is mounted in the position shown in Fig. 1. Under certain conditions, the lugs 22 will also engage the innermost face of the recess 31 as well as the inclined surfaces 32 when the contact carrier is fully inserted in operative position in the groove 11. These conditions will depend upon the vertical spacing of the inclined surfaces 32 with respect to the base of grooves 11 when the supporting member is molded. Normally this member is molded in cold state, the inclined surfaces 32 being formed by one mold member, and the grooves 11 by another mold member. The two mold members do not always similarly cooperate and irregularities in one supporting member 10 over another result.

Under certain other conditions, the lugs 22 on arms 21 will engage the inclined surfaces 32 before the contact carrier 15 is fully inserted into operative position and further movement inward of contact carrier 15 will cause the lugs to move downward, simultaneously flexing the arms 21 downward to secure the rear end of the contact carrier against vertical movement.

In view of the construction of the instant contact carrier, however, any imperfections occurring in the molded supporting member 10 may be overcome and a contact carrier may be properly and resiliently secured in each groove 11 in such a way that undesirable movement of the contact carrier in the groove is prevented and the occurrence of noise and unnecessary wear incident to such undesirable movement is also prevented.

In the embodiment of the invention shown in Fig. 6, the contact carrier is substantially the same as that shown in Fig. 4 except that the portions of the outer sides of the resilient arms 21' corresponding to the outward divergent camming surfaces 21a in Fig. 4 are bowed or curved outward to provide somewhat increased resilient contact between the arms 21' and the upstanding sides of the groove 11 when the same engage against said upstanding sides. Corresponding numerals are used in Figs. 4 and 6 except that the numerals on Fig. 6 are indicated with a prime thereafter.

It will be understood, of course, that resilient engagement between the rear end of the contact carrier and the supporting member 10 may be accomplished by means employing similar principles but not the specific embodiments illustrated in Figs. 1–6. For example, as a further embodiment of the invention, the rear end of the contact carrier 15 may be substantially rigid or non-resilient such as illustrated in the rear portion of contact carrier 7 in said above-mentioned application, Ser. No. 373,188. In using such a rigid rear end on the contact carrier, the upstanding sides of the groove 11 may be provided with resilient portions in the form of elements 33 illustrated in Fig. 7 to be curved, leaf spring elements mounted at their inner ends in appropriate slots 34 and grooves or indentations 35 formed in said upstanding side walls, the slots being open at the top to receive said resilient members which are normally disposed in the base of said slots 34, as shown in section in Fig. 8. The configuration of the springs and slots is such that the springs are held against longitudinal movement in the groove 11. It will thus be seen that engagement between the rear end of the contact carrier and the opposed resilient members 33 will prevent any appreciable horizontal movement between said rear end of the contact carrier and the base member 10.

Similar resilient means may also be mounted on said base member 10 adjacent the grooves 11 to engage the upper surface, for instance, of the rear end of the contact carrier to hold said rear end against appreciable vertical movement with respect to the supporting member 10. Furthermore, while the resilient arms 21 have been illustrated as being formed integral with the contact carrier 15, it is to be understood that the invention is not necessarily to be so restricted.

In the specification and claims, the terms describing the directions in which certain elements extend or move such as: horizontal, vertical, forward, rearward, innermost, and outermost, are to be considered with the switch assembly mounted in the position shown in Figs. 1 and 2 particularly. The terms are relative to these positions and it is to be understood that the switch may be mounted in other positions and the terms used will apply in the same relative sense as set forth above.

While the invention has been illustrated and described in its preferred embodiment and has included certain details, it should be understood that the invention is not to be limited to the precise details herein illustrated and described since the same may be carried out in other ways, falling within the scope of the invention as claimed.

What I claim is:

1. In an electric switch contact construction, the combination of a supporting member, a contact carrying member longitudinally movable into and out of normal position on the supporting member, separable coengaging means respectively carried by said members and adapted to normally releasably hold one end of said contact carrying member in said normal position and against longitudinal movement, and resilient means on one member engageable with the other member when in normal position thereon, the area of said engagement between said members being adjacent the other end of said contact carrying member and said engagement yieldably holding the other end of the contact carrying member against transverse movement relative to the supporting member.

2. In an electric switch contact construction, the combination of a supporting member, a contact carrying member longitudinally movable into and out of normal position on the supporting member, separable coengaging means respectively carried by said members and adapted to normally releasably hold one end of said contact carrying member in said normal position and against longitudinal movement, and resilient means on one member engageable with the other member when in normal position thereon, the area of said engagement between said members being adjacent the other end of said contact carrying member and said engagement yieldably holding the other end of the contact carrying member against transverse movement

in a normally substantially horizontal direction relative to the supporting member.

3. In an electric switch contact construction, the combination of a supporting member, a contact carrying member longitudinally movable into and out of normal position on the supporting member, separable coengaging means respectively carried by said members and adapted to normally releasably hold one end of said contact carrying member in said normal position and against longitudinal movement, and resilient means on one member engageable with the other member when in normal position thereon, the area of said engagement between said members being adjacent the other end of said contact carrying member, and said engagement yieldably holding the other end of the contact carrying member against transverse movement in a normally substantially vertical direction relative to the supporting member.

4. In an electric switch contact construction, the combination of a supporting member, a contact carrying member longitudinally movable into and out of normal position on the supporting member, separable coengaging means respectively carried by said members and adapted to normally releasably hold one end of said contact carrying member in said normal position and against longitudinal movement, and resilient means on one member engageable with the other member when in normal position thereon, the area of said engagement between said members being adjacent the other end of said contact carrying member and said engagement yieldably holding the other end of the contact carrying member against transverse movement in normally substantially horizontal and vertical directions relative to the supporting member.

5. In an electric switch contact construction, the combination of a supporting member having upstanding means, a contact carrying member longitudinally movable into and out of normal position on the supporting member, and separable coengaging means respectively disposed on said members and adapted to normally releasably hold one end of said contact carrying member in said normal position and against longitudinal movement, the other end of said contact carrying member being bifurcated to form a pair of resilient arms disposed along said contact carrying member and provided with surface portions respectively divergent outward from each other and resiliently engaging said upstanding means on said supporting member when said members are interconnected to normally hold the other end of the contact carrying member against movement relative to the supporting member in a direction transverse to the direction of longitudinal movement of the contact carrying member.

6. In an electric switch contact construction, the combination of a supporting member having a plurality of projecting surfaces, a contact carrying member longitudinally movable into and out of normal position on the supporting member, separable coengaging means respectively disposed on said members and adapted to normally releasably hold one end of said contact carrying member in said normal position and against longitudinal movement, the other end of said contact carrying member being bifurcated to form a pair of resilient arms disposed along said contact carrying member, and a projection extending from one side of each arm to respectively resiliently engage one of said plurality of projecting surfaces when said members are interconnected to normally hold the other end of the contact carrying member against movement relative to the supporting member in a normally substantially vertical direction and transverse to the direction of longitudinal movement of the contact carrying member.

7. In an electric switch contact construction, the combination of a supporting member having a plurality of upstanding means respectively provided with a projecting surface, a contact carrying member longitudinally movable into and out of normal position on the supporting member, separable coengaging means respectively disposed on said members and adapted to normally releasably hold one end of said contact carrying member in said normal position and against longitudinal movement, the other end of said contact carrying member being bifurcated to form a pair of resilient arms disposed along said contact carrying member, and a projection extending outward from the outer side of each arm to respectively engage one of said plurality of projecting surfaces when said members are interconnected to normally hold the other end of the contact carrying member against movement relative to the supporting member in a normally substantially vertical direction and transverse to the direction of longitudinal movement of the contact carrying member.

8. In an electric switch contact construction, the combination of a supporting member having opposed upstanding means each provided with a projecting surface, a contact carrying member longitudinally movable into and out of normal position on the supporting member, separable coengaging means respectively disposed on said members and adapted to normally releasably hold one end of said contact carrying member in said normal position and against longitudinal movement, the other end of said contact carrying member being bifurcated to form a pair of resilient arms disposed along said contact carrying member and provided with surface portions respectively divergent outward from each other, and a projection extending transversely from one side of each arm, said outward divergent portions and projections respectively resiliently engaging said upstanding means and projecting surfaces when said members are interconnected to normally hold the other end of the contact carrying member against movement relative to the supporting member in normally substantially horizontal and vertical directions which are transverse to the direction of longitudinal movement of the contact carrying member.

9. A contact carrying member adapted to be secured to a supporting member in a switch and comprising an element having bifurcated opposite ends to provide pairs of resilient arms respectively adapted to cooperate with spaced securing means on said supporting member to detachably secure said contact carrying member at its opposite ends thereto, a contact secured to said carrying member, and means on at least one arm of each pair of arms adapted to directly engage one of said spaced securing means on said supporting member.

10. A contact carrying member adapted to be secured to a supporting member in a switch and comprising an element having bifurcated opposite ends to provide pairs of resilient arms, one pair of resilient arms having notches arranged in opposite surfaces thereof, and the other pair of resilient arms having a surface on the outer

edge of each arm which surfaces are divergent, said notches and diverging surfaces being adapted to resiliently engage with cooperating means on said supporting member to detachably secure said contact carrying member thereto.

11. A contact carrying member adapted to be secured to a supporting member in a switch and comprising an element having resilient holding means adjacent one end thereof adapted to cooperate with securing means on said supporting member to maintain said member against longitudinal movement, said member also having a slot extending inward from the other end to form a pair of resilient arms, and a projection extending from one edge of each arm, said projections being adapted to engage other securing means on said supporting member to detachably secure said contact carrying member thereto.

12. A contact carrying member adapted to be secured to a supporting member in a switch and comprising an element having means at one portion thereof adapted to cooperate with securing means on said supporting member, a bifurcation extending inward from one edge to form a pair of resilient arms each having a surface on its outer edge which surfaces are relatively outward divergent, the remainder of said member to which said arms are attached being substantially planar and disposed at an angle to the plane in which said arms are located, and a projection extending from one edge of each arm, said projections and divergent surfaces being adapted to engage other securing means on said supporting member to detachably secure said contact carrying member thereto.

RICHARD P. BALLOU.