March 17, 1942. A. S. MILINOWSKI 2,276,996

NON-RADIO-INTERFERING THERAPEUTIC APPARATUS

Filed Nov. 30, 1940 2 Sheets-Sheet 1

Fig. 1.

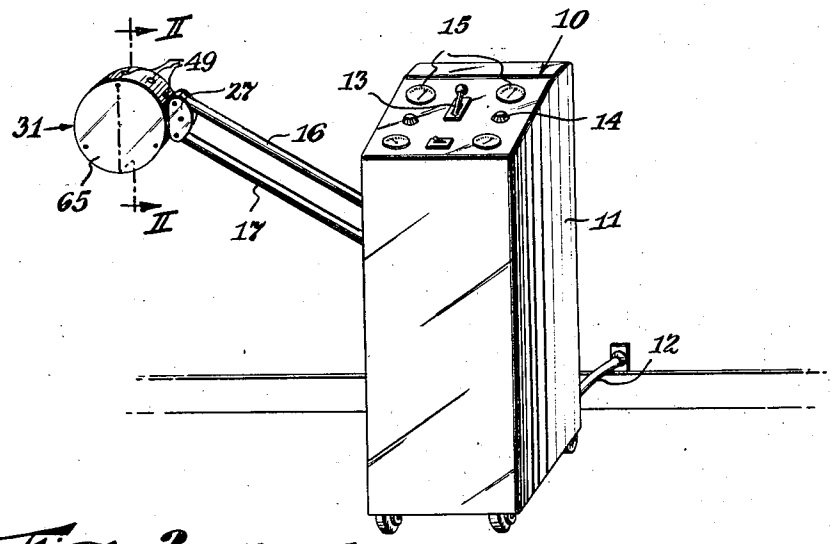

Fig. 2.

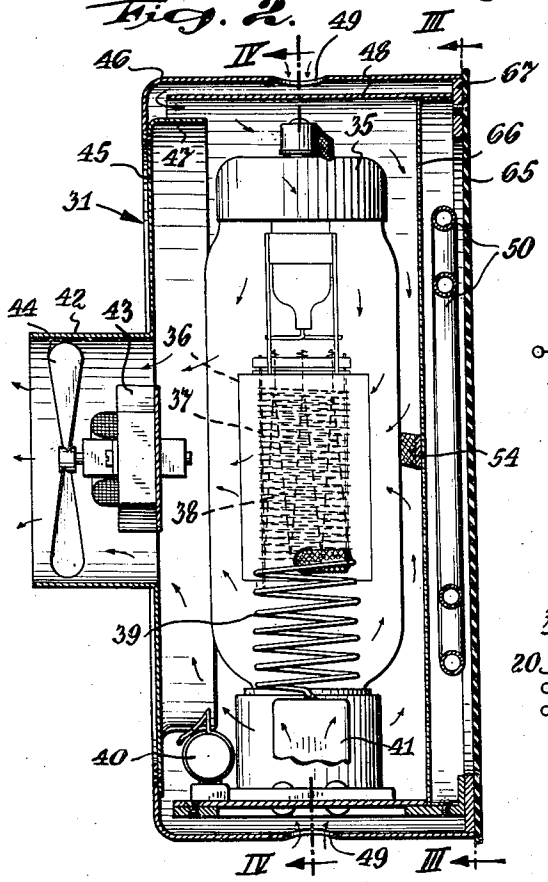

Fig. 5.

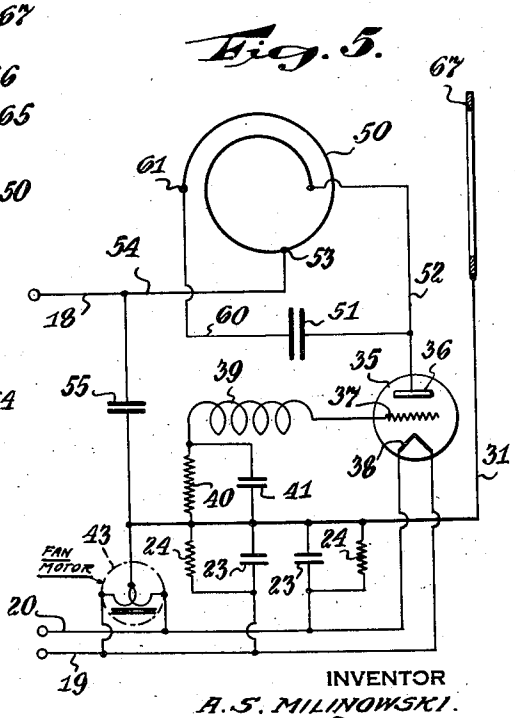

INVENTOR
A. S. MILINOWSKI.
BY
ATTORNEY

March 17, 1942. A. S. MILINOWSKI 2,276,996

NON-RADIO-INTERFERING THERAPEUTIC APPARATUS

Filed Nov. 30, 1940 2 Sheets-Sheet 2

Fig. 3.

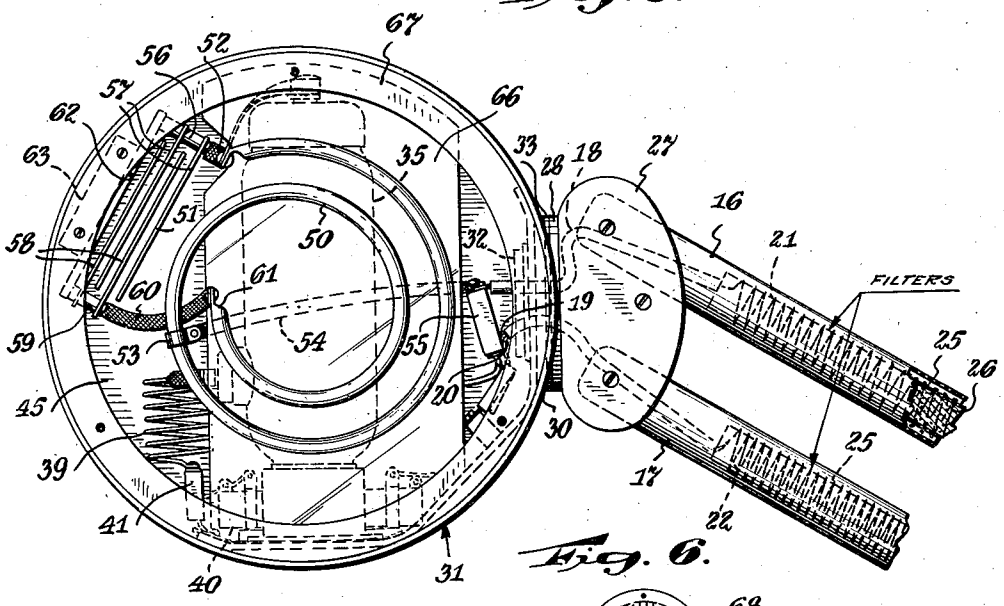

Fig. 6.

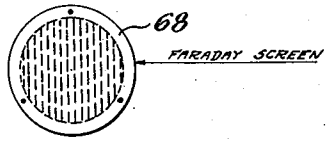

Fig. 4.

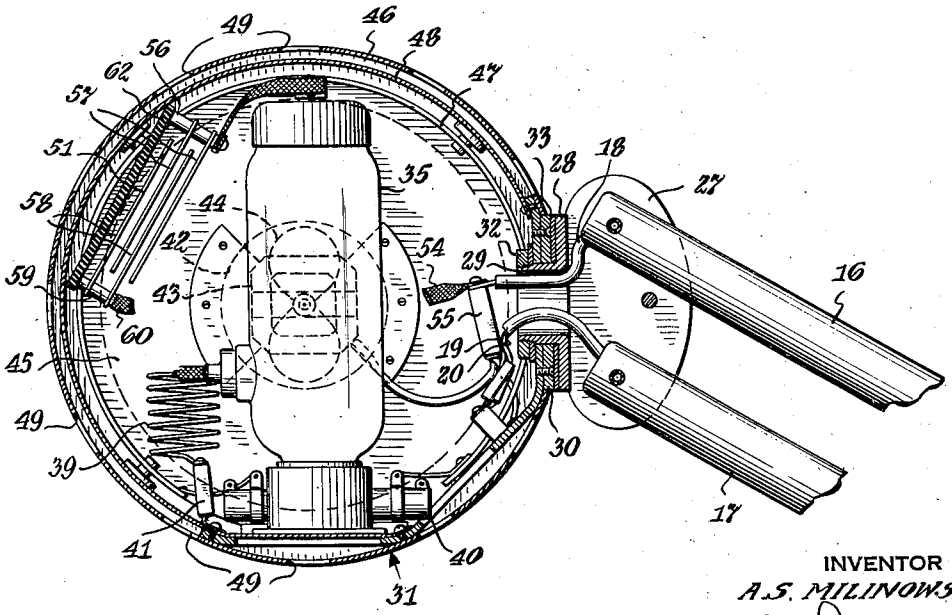

INVENTOR
A. S. MILINOWSKI.
BY
ATTORNEY

Patented Mar. 17, 1942 2,276,996

UNITED STATES PATENT OFFICE

2,276,996

NON-RADIO-INTERFERING THERAPEUTIC APPARATUS

Arthur S. Milinowski, New York, N. Y., assignor to A. J. Ginsberg, New York, N. Y.

Application November 30, 1940, Serial No. 367,895

18 Claims. (Cl. 128—422)

The invention relates to short wave apparatus and especially to short wave diathermy apparatus.

An object of the invention is to minimize the radiations from a short wave apparatus that would interfere with the operation of other apparatus, especially radio receivers.

Another object of the invention is to effectively shield short wave diathermy apparatus except for the portion of the apparatus directly applied to the patient.

A still further object of the invention is to confine the particular parts producing interfering radiations to the casing applied to the patient in order to eliminate expensive shielding that would otherwise be necessary to effectively shield the apparatus.

Other objects and advantages of the invention will be apparent from the following description and drawings wherein:

Fig. 1 is a perspective view of a completed commercial embodiment of the invention.

Fig. 2 is a cross section on lines II—II of Fig. 1.

Figs. 3 and 4, respectively, are cross sections on lines III—III and IV—IV of Fig. 2.

Fig. 5 is a diagrammatical view of the preferred circuit arrangement of the apparatus.

Fig. 6 is a front view of a screen that may be utilized in the apparatus.

In some respects this application is a continuation-in-part of my copending application on Electrotherapy, Ser. No. 186,329, filed January 22, 1938. The use of short wave diathermy apparatus such as described in this copending application ordinarily gives rise to strong electromagnetic radiations which cause radio interference. It is exceedingly difficult to eliminate these radiations. The patient or applicator circuit generally comprises in part a large loop or coil which is tuned to greatest current flow and becomes an effective antenna. A certain amount of high frequency current gets to the power line and cannot be kept out by ordinary filter means. The use of a ground lead for filter purposes of frequencies above 10 megacycles is ineffective since even a short ground lead becomes a radiator and, moreover, possesses such an impedance that it does not provide a true ground potential.

My invention in its specific form minimizes interfering radiations by including the entire oscillating and high frequency circuit, including means of application to the patient in a single "treatment head" mounted on insulating supports and of such size that its largest dimension is small compared to a half wave length at the frequency used. It is therefore impossible for any part of the circuit to act with any efficiency as a radiator.

In Fig. 1 I have disclosed the usual control panel 10 mounted on a portable cabinet 11 with a connection 12 to a suitable source of power supplying 750 to 3000 volts. This panel 10 contains the well known switch 13, adjustments 14, and meters 15. From this panel and cabinet extend two arms 16 and 17. These arms, as disclosed in Fig. 3, contain anode lead 18 and two cathode leads 19 and 20. These leads are the preferably minimum number which can be used in the arrangement.

I also preferably have in these arms, close to the treatment head, filters or high frequency chokes 21 and 22. These chokes, of course, contain the condensers 23 and resistances 24 of proper design, illustrated diagrammatically in Fig. 5. I also preferably wind the plate and filament leads on tubes 25 of insulation containing iron filings 26. The iron losses are very high at the frequencies utilized, and the high frequency currents are quickly damped out while no appreciable low frequency impedance is added to the circuit.

The winding of the leads on the tubes can be shunted by resistors of proper value. A bracket 27 is connected to these arms and supports a head 28 with a central extending circular flange 29 through which the current leads extend. On this flange is a plate 30 to which is secured the casing 31 constituting the treatment head. This casing is attached by a screw-threaded plate 32, and a washer 33 intermediate the plate 30 and the head 28 allows the adjustment of the treatment head to any angle desired.

The treatment head includes a thermionic vacuum tube 35 for producing high frequency oscillations. This tube may be of the particular design disclosed on the drawings or may be of any other form adapted for the production of high frequency oscillations. The tube, of course, contains the anode 36, grid 37, and cathode 38. The cathode 38 is, of course, connected to the cathode leads 19 and 20. The grid 37 is connected to a grid tuning coil 39 which is connected to the casing 31 of the treatment head, preferably through a grid limiting resistor 40 in parallel with a grid blocking condenser 41. The casing 31 is grounded in turn through the current leads 19 and 20.

The tube 35 will always be maintained in an upright position by the bracket members, and the plane of the filament is preferably the central plane through the front and back of the casing.

At the rear of the casing 31, as illustrated in Fig. 2, is a circular metal flange 42 and inside of

this flange is supported a small fan motor 43 with a metal blade 44 of maximum diameter to just clear the flange 42. This motor is connected to the current leads 19 and 20, as diagrammatically illustrated in Fig. 5. The casing 31 of the treatment head preferably has a double circular wall attached to the back portion 45 that supports the fan motor. This double wall comprises an outer wall 46 serving as a continuation of the back wall, as illustrated at 45. The back wall has a circular flange 47 extending a short way into the interior of the casing. A second cylindrical wall 48 is spaced slightly from the outer cylindrical wall 46 and terminates intermediate the flange 47 of the back wall and the outer circular casing 46.

The outer wall 46 has a plurality of openings 49 around its circumference to act as an intake of cooling air. The air is drawn in and passes around the inner wall 48 to be drawn over the surface of the parts contained within the head. It will be noted in Fig. 4 that the diameter of the outer wall 46 and inner wall 48 are just sufficient to clear the tube 35 located therein. The other parts are located about the tube so as not to increase the diameter of the casing over that necessitated by the tube 35.

The oscillating tank circuit connected to the tube 35 preferably comprises a coil 50 preferably in the form of a helical hollow tube, illustrated in cross section in Fig. 2 and in elevation in Fig. 3. One end of this coil is connected to the plate 36 of the tube. The other end of the coil is connected to the tank condenser 51 which is in turn connected to the lead 52 connected from the plate to the first-mentioned end of the coil. The mid-point 53 of the oscillating tank coil 50 is connected by an extension 54 to the plate current lead 18 extending through one of the arms 16. This lead 54 may be by-passed by a condenser 55 to the casing 31. The tank condenser 51 preferably comprises a bolt and spacers 56 attached to the outer end of the helical oscillating coil illustrated in Fig. 3, and has a plurality of large plates 57 extending therefrom. Interleaved with these plates 57 are other plates 58 connected to another bolt and spacers 59 which has a connection 60 to the other end 61 of the oscillating tank coil. A suitable insulator support 62 for the condenser secures the condenser at 63 to the remainder of the casing. The oscillating tank coil 50 is in the front of the treatment head just back of an insulating front face 65. A mica plate 66 preferably extends across the treatment head between the coil 50 and the remaining parts of the treatment head so that the current of air drawn in through the ports 49 will be effectively directed over these parts and out through the flange 42 at the rear of the treatment head. In place of mica, a mica composition, such as that sold under the trade name "Micalex," or other heat-resisting insulation may be used. Just inside the front portion of the casing is a grounding loop, ring, or shield 67 which is, of course, connected to the metal casing 31 as diagrammatically illustrated in Fig. 5. While the insulating plate or face 65 is illustrated as flat, it may be bowed or otherwise caused to fit portions of the patient.

The coupling to the patient may be electrostatic by making use of a small electrode plate in the front of the head, or electromagnetic by making direct use of the tank coil 50, or by making a combination of both electrostatic and magnetic. I prefer, however, to use electromagnetic exclusively by applying the treatment head 31 directly to the patient, preferably within one inch of the patient's body portion to be treated. A Faraday screen 68 illustrated in Fig. 6 may be used inside the front guard between the coil 50 and the patient in place of the loop 67. This screen consists of a number of wires interconnected and kept at virtual ground potential, but so arranged that there is no complete conducting loop. This screen prevents any electrostatic coupling of the patient, but permits full electromagnetic coupling to the oscillator coil. The virtual ground is obtained by interconnecting the screen with other metal shielding parts, all of which are connected either directly or through a blocking condenser with the neutral point of the oscillating circuit.

The only remaining practical source of radiation is the oscillating tank coil 50 itself. This coil preferably has a total diameter between 2 and 12 inches and preferably 7 inches, which is an extremely small fraction of half a wavelength. The wavelengths generally utilized are from 6 to 24 meters, so that the radiation from this oscillating tank coil is very small. The diameter of the coil is less than 10% at least of a half wavelength and preferably is considerably less than this. The ratio of the maximum diameter of the coil to a half wave length of the particular frequency employed should be kept below 1 to 10. In my particular construction the maximum length or diameter of the treatment head is less than 10% of half a wave length. The use of a conducting ring 67 or the Faraday shield 68 properly placed in a plane parallel to the coil is effective in reducing radiation from this source.

It will be noted that the arrangement inside the treatment head with the open tank condenser 51 and the grid tuning coil 39 with its large spaced turns, as well as the effective direction of a cooling air current over these parts especially to the glass container of the vacuum tube 35, provides effective cooling of the various portions of the circuit and increases the efficiency of the apparatus.

Because of the concentration of the electromagnetic field to a confined area of the patient, the energy is also effectively utilized. It will also be appreciated that the arrangement permits flexibility in treatment to a degree not hitherto possible inasmuch as it is not necessary to keep high frequency leads away from metal and other parts of the patient's body. Since the losses are extremely low, it is possible to get an accurate indication of the wattage input to the patient or dosage by the use of a watt meter properly calibrated and compensated for the condition of zero load in the patient circuit.

While I have disclosed the metal parts 45 and 46 as outer parts of the casing, the parts may be enclosed, in turn, by other material for decorative or protective purposes. The particular bracket connections between the treatment head and cabinet may be modified from that shown.

It is apparent that many other modifications may be made in the particular elements in regard to their number, form and arrangement, and accordingly I desire only such limitations to be placed upon my invention as are necessitated by the spirit and scope of the following claims.

I claim:

1. A short wave diathermy apparatus shielded to prevent radio interference comprising a cabinet, connections in said cabinet for a source of electrical energy to supply high potential elec-

trical energy, an arm extending from said cabinet, a treatment head supported by said arm, conductors extending along said arm for supplying energy from said source to said treatment head, means associated with said conductors to prevent the transmission of radio frequencies by said conductors, an oscillating circuit in said treatment head connected to the conductors extending from said source, said oscillating circuit including a vacuum tube generator of short waves, an oscillating coil and condenser, and said treatment head being shielded to prevent the emanation of radiations of radio frequency therefrom but enabling said radiations to be applied to a patient when inductively coupled to said treatment head.

2. A short wave diathermy apparatus shielded to prevent radio interference comprising a cabinet, connections in said cabinet for a source of electrical energy to supply high potential electrical energy, an arm extending from said cabinet, a treatment head supported by said arm, conductors extending along said arm for supplying energy from said source to said treatment head, means associated with said conductors to prevent the transmission of radio frequencies by said conductors, an oscillating circuit in said treatment head connected to the conductors extending from said source, said oscillating circuit including a vacuum tube generator of short waves, an oscillating coil and condenser, and said treatment head being shielded to prevent the emanation of radiations of radio frequency therefrom but enabling said radiations to be applied to a patient when inductively coupled to said treatment head, the maximum length of said treatment head being less than ten percent of a half wave length of the waves produced by said oscillating circuit.

3. A short wave diathermy apparatus shielded to prevent radio interference comprising a cabinet, connections in said cabinet for a source of electrical energy to supply high potential electrical energy, an arm extending from said cabinet, a treatment head supported by said arm, conductors extending along said arm for supplying energy from said source to said treatment head, means associated with said conductors to prevent the transmission of radio frequencies by said conductors, an oscillating circuit in said treatment head connected to the conductors extending from said source, said oscillating circuit including a vacuum tube generator of short waves, an oscillating coil and condenser, the maximum diameter of said oscillating coil being less than ten percent of half a wave length of the waves produced by said oscillating circuit, and said treatment head being shielded to prevent the emanation of radiations of radio frequency therefrom but enabling said radiations to be applied to a patient when inductively coupled to said treatment head.

4. A treatment head for short wave diathermy apparatus comprising a small portable metallic casing containing an oscillating circuit including a vacuum tube generator of short waves, and an oscillating coil and condenser, metallic shielding means grounded with respect to said casing, said casing and shielding means cooperating as a substantially complete shield on all sides except the portion adjacent the oscillating coil applied to the patient.

5. A treatment head for short wave diathermy apparatus, comprising a small portable casing containing an oscillating circuit including a vacuum tube generator of short waves, an oscillating coil and condenser, said casing having a front portion permitting radiant energy to pass to the patient, a rear portion of metal with an opening therein, a metal fan blade extending substantially across said opening, a fan motor supported on said casing, openings in the remaining portions of said casing, and means within the casing shielding said openings.

6. A treatment head for short wave diathermy, comprising a small portable casing having enclosure forming walls of which one comprises a front face portion of insulation for application towards the patient, an oscillating coil directly back of said front face, a vacuum tube generator of short waves and a condenser within said casing connected with said oscillating coil, the remaining walls of said casing being metallic and shielding the oscillating coil, generator and condenser.

7. A treatment head for short wave diathermy, comprising a small portable casing having enclosure forming walls of which one comprises a front face portion of insulation for application towards the patient, an oscillating coil directly back of said front face, a vacuum tube generator of short waves and a condenser within said casing connected with said oscillating coil, the remaining walls of said casing being metallic and shielding the oscillating coil, generator and condenser, the maximum diameter of said oscillating coil being less than ten percent of half a wave length of the waves produced in said coil by said generator.

8. A treatment head for short wave diathermy comprising a small portable casing having enclosure forming walls of which one comprises a front face portion of insulation for application towards the patient, an oscillating coil directly back of said front face, a vacuum tube generator of short waves and a condenser within said casing connected with said oscillating coil, the remaining walls of said casing being metallic and shielding the oscillating coil, generator and condenser, said casing being perforated and a fan supported on said casing for cooling the elements in said casing.

9. A treatment head for short wave diathermy comprising a small portable casing having enclosure forming walls of which one comprises a front face portion of insulation for application towards the patient, an oscillating coil directly back of said front face, a vacuum tube generator of short waves and a condenser within said casing connected with said oscillating coil, the remaining walls of said casing being metallic and shielding the oscillating coil, generator and condenser, said casing being perforated and a fan supported on said casing for cooling the elements in said casing, the overall dimension of said coil being less than half a wave length of said short waves.

10. A treatment head for short wave diathermy comprising a casing having one face portion of insulation adapted to be applied towards a patient, an oscillating coil directly back of said face portion of insulation, a shield about said oscillating coil, the remaining portion of said casing being of metal and connected to said shield, a vacuum tube generator of short waves having an anode, cathode and grid within said casing, the anode of said tube being connected to said oscillating coil, the grid of said tube being connected to said shield, an energizing circuit for said cathode, and a filter interconnecting

said cathode energization circuit and said shield.

11. A treatment head for short wave diathermy comprising a casing having one face portion of insulation adapted to be applied towards a patient, an oscillating coil directly back of said face portion of insulation, a shield about said oscillating coil, the remaining portion of said casing being of metal and connected to said shield, a vacuum tube generator of short waves having an anode, cathode and grid within said casing, the anode of said tube being connected to said oscillating coil, the grid of said tube being connected to said shield, an energizing circuit for said cathode, and a filter interconnecting said cathode energization circuit and said shield, the overall dimension of said oscillating coil being considerably less than half a wave length of said short waves.

12. A treatment head for short wave diathermy comprising a casing having one face of insulation adapted to be applied towards a patient, a helical oscillating coil directly back of said face of insulation, a shield in a plane parallel with and about said coil, a generating oscillating circuit of short waves in said casing connected to said coil, a blocking condenser, said shield being connected through said blocking condenser to said oscillating circuit, the major part of said casing being of metal connected to said shield.

13. A treatment head for short wave diathermy, comprising a casing having one face of insulation adapted to be applied towards a patient, a helical oscillating coil directly back of said face of insulation, a shield in a plane parallel with and about said coil, a generating oscillating circuit of short waves in said casing connected to said coil, a blocking condenser, said shield being connected through said blocking condenser to said oscillating circuit, the major part of said casing being of metal connected to said shield, the overall diameter of said helical oscillating coil being less than half a wave length of said oscillating circuit.

14. A treatment head for short wave diathermy, comprising a vacuum tube oscillator, a cylindrical casing slightly larger in diameter than the length of said vacuum tube oscillator surrounding said tube, said casing having a face of insulation adapted to be applied toward a patient, a helical coil being located intermediate said face and said vacuum tube oscillator, an open plate condenser connecting the ends of said coil, said coil and condenser being connected to said vacuum tube oscillator, and means directing a cooling medium at said vacuum tube oscillator.

15. A treatment head for short wave diathermy, comprising a vacuum tube oscillator, a cylindrical casing slightly larger in diameter than the length of said vacuum tube oscillator surrounding said tube, said casing having a face of insulation adapted to be applied towards a patient, a helical coil being located between said face and said vacuum tube oscillator, an open plate condenser connecting the ends of said coil, said coil and condenser being connected to said vacuum tube oscillator, the cylindrical side of said casing being of metal having openings therethrough, and a fan supported by said casing for drawing cooling air over said vacuum tube oscillator.

16. A treatment head for short wave diathermy comprising a vacuum tube oscillator, a cylindrical casing slightly larger in diameter than the length of said vacuum tube oscillator surrounding said tube, said casing having a side of insulation adapted to be applied towards a patient, a helical coil being located between said side and said vacuum tube oscillator, an open plate condenser connecting the ends of said coil, said coil and condenser being connected to said vacuum tube oscillator, a shielding member supported on the inner side of said side of insulation about said oscillating coil, the remaining portion of said casing being substantially of metal connected to said shielding member.

17. A treatment head for short wave diathermy comprising a vacuum tube oscillator, a cylindrical casing slightly larger in diameter than the length of said vacuum tube oscillator surrounding said tube, said casing having a side of insulation adapted to be applied towards a patient, a helical coil being located intermediate said side and said vacuum tube oscillator, an open plate condenser connecting the ends of said coil, said coil and condenser being connected to said vacuum tube oscillator, a shielding member supported on the inner side of said side of insulation about said oscillating coil, the remaining portion of said casing being substantially of metal connected to said shielding member, a blocking condenser, said shielding member being connected through said blocking condenser to the oscillating circuit including said coil, condenser and vacuum tube oscillator.

18. A treatment head for short wave diathermy containing a vacuum tube oscillator having plate, cathode and grid, a helical coil and a condenser connecting the ends of said coil and forming an oscillating circuit connected to the plate of said tube, a shield in said head directing the radiant energy from said oscillating circuit in the desired direction, a filter interconnecting the grid of said tube and said shield, a cathode energization circuit for said tube, a second filter connecting said energization circuit and said shield and a lead for supplying plate energy connected to an intermediate point on said helical coil.

ARTHUR S. MILINOWSKI.