May 31, 1938. T. E. HAUGHT 2,119,433

AUTOMATIC FLUID STRAINER

Filed Nov. 25, 1936 3 Sheets-Sheet 1

Fig. 7.

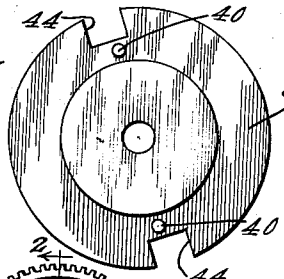

Fig. 8.



Fig. 9.

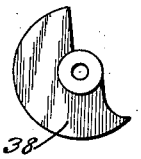

Fig. 1.

Thomas E. Haught, INVENTOR

BY Victor J. Evans & Co.

ATTORNEYS

May 31, 1938. T. E. HAUGHT 2,119,433

AUTOMATIC FLUID STRAINER

Filed Nov. 25, 1936 3 Sheets-Sheet 2

Fig. 2.

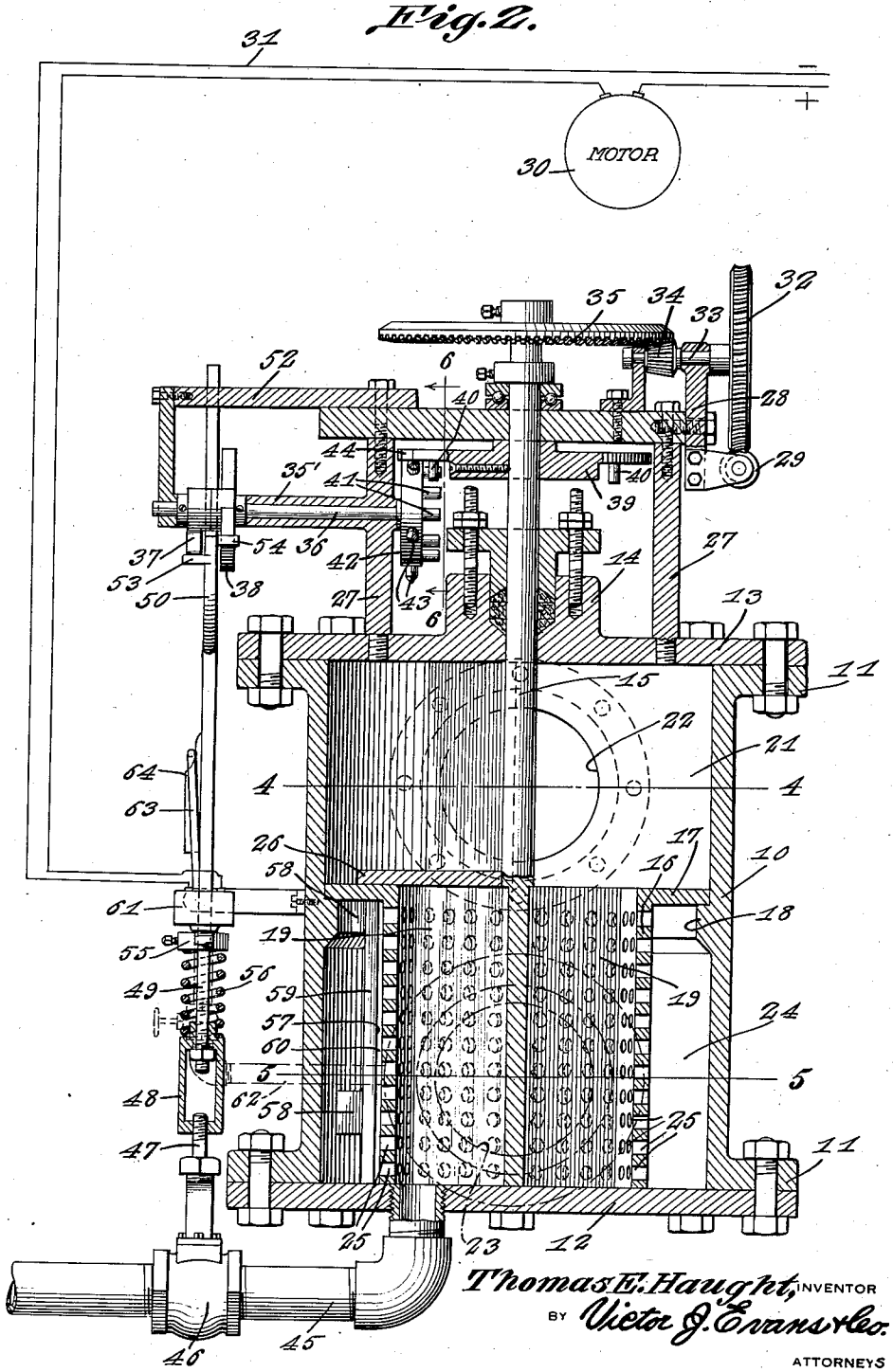

Thomas E. Haught, INVENTOR

BY Victor J. Evans & Co.

ATTORNEYS

May 31, 1938. T. E. HAUGHT 2,119,433

AUTOMATIC FLUID STRAINER

Filed Nov. 25, 1936 3 Sheets-Sheet 3

Fig. 6.

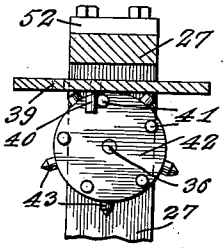

Fig. 3.

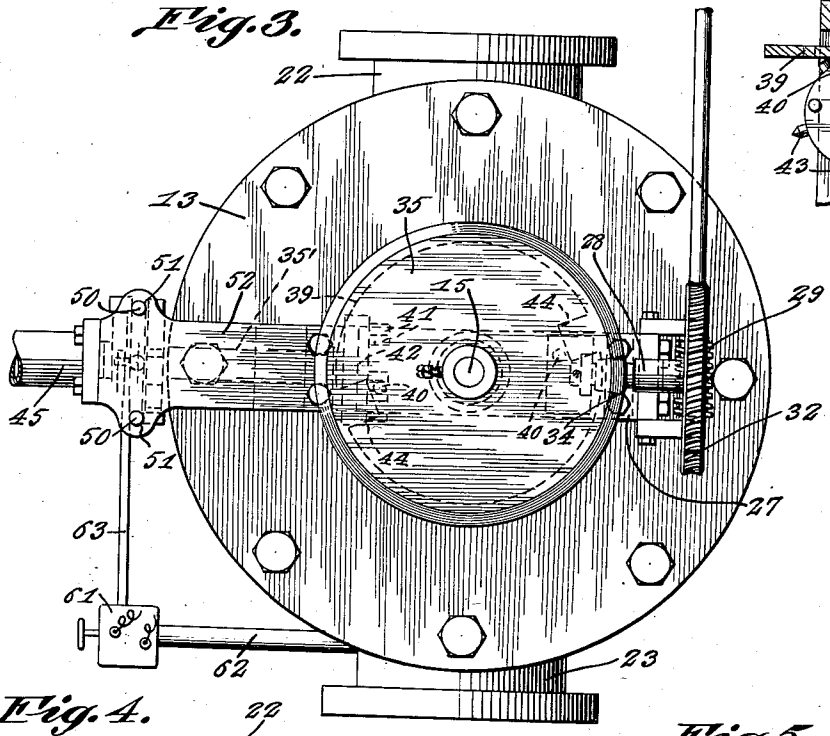

Fig. 4.

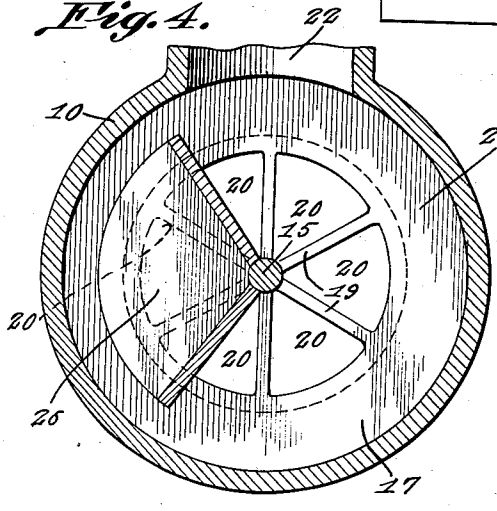

Fig. 5.

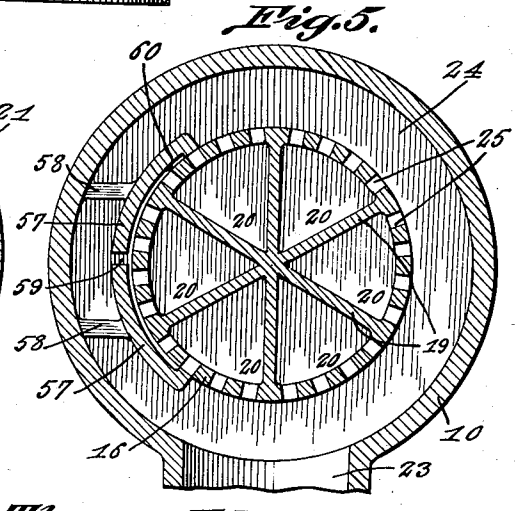

Thomas E. Haught, INVENTOR

BY Victor J. Evans & Co.

ATTORNEYS

Patented May 31, 1938 2,119,433

UNITED STATES PATENT OFFICE

2,119,433

AUTOMATIC FLUID STRAINER

Thomas E. Haught, Boldman, Ky.

Application November 25, 1936, Serial No. 112,775

3 Claims. (Cl. 210—167)

The invention relates to a fluid strainer and more especially to an automatic fluid strainer involving refinements over the subject matter of an application for United States Letters Patent filed on or about the sixth day of August, 1935, and serially numbered 35,011.

The primary object of the present invention is the provision of a device of this character, wherein fluid under pressure when flowing will be cleaned by relieving the same from leaves or other foreign matter; such fluid will be automatically strained and the leaves or other foreign matter collected therefrom will be discharged when relieved from the flow of fluid.

Another object of the invention is the provision of a strainer of this character, wherein the same is entirely automatic in the working thereof and avoids any undue waste of the fluid during the cleaning operation of the same, the automatic action taking place in a novel manner and through mechanism novel and unique in assembly.

A further object of the invention is the provision of a strainer of this character, wherein the permanent chocking of the flow of fluid will be eliminated and debris or foreign matter relieved therefrom so that such fluid will be cleaned during flow activity thereof.

A still further object of the invention is the provision of a strainer of this character, wherein refinements are arrived at over the subject matter of an application for United States Letters Patent filed on or about the sixth day of August, 1935, bearing Serial Number 35,011, and also which is comparatively simple in construction, thoroughly reliable and efficient in operation, automatically acting, strong, durable, and inexpensive to manufacture and install.

With these and other objects in view, the invention consists in the features of construction, combination and arrangement of parts as will be hereinafter more fully described, illustrated in the accompanying drawings, which disclose the preferred embodiment of the invention and pointed out in the claims hereunto appended.

In the accompanying drawings:

Figure 1 is a side elevation of a strainer constructed in accordance with the invention.

Figure 2 is a vertical sectional view thereof taken on the line 2—2 of Figure 1 and showing diagrammatically the motor and the switch control for the latter in association with said strainer.

Figure 3 is a top plan view.

Figure 4 is a sectional view on the line 4—4 of Figure 2.

Figure 5 is a sectional view on the line 5—5 of Figure 2.

Figure 6 is a fragmentary sectional view on the line 6—6 of Figure 2 looking in the direction of the arrows.

Figure 7 is a bottom plan view of one of the driven elements of the strainer.

Figure 8 is a side elevation of the valve lifting cam.

Figure 9 is a side elevation of the valve closing cam.

Similar reference characters indicate corresponding parts throughout the several views in the drawings.

Referring to the drawings in detail, the strainer comprises a cylindrical body or casing 10 having at opposite open ends, which may be termed the top and bottom, annular flanges 11 against which are seated end heads 12 and 13, respectively. The end head 13 is formed with a stuffing box or packing gland 14 through which is passed the stem 15 of a reticulated or perforated strainer cylinder 16 held centered within the casing or shell 10 by a lateral annular flange 17 which is formed at the top of this cylinder 16 and is engaged upon an annular shoulder or seat 18 formed interiorly of the casing or shell 10 and in this instance is intermediate thereof. Integral with the cylinder 16 is a spider formation interiorly thereof providing radial walls or partitions 19 dividing the said cylinder into a plurality of segmental shaped chambers 20, these being concentric to the axis of movement of said cylinder. This cylinder at opposite ends is opened and by reason of the location of said cylinder within the casing or shell 10 the lower ends of the chambers 20 will at all times be closed by the end head 12 next thereto, the opposite upper end of the said cylinder being open establishes communication of the chambers 20 with the casing or shell 10 above the flange 17 of said cylinder. Thus the upper open ends of the chambers 20 lead directly to a flow space 21 constituted above the said cylinder 16 within the casing or shell 10 and with which communicates a fluid inlet 22. The inlet 22 is uppermost to an outlet 23 leading from the casing or shell 10 and is above the seat or shoulder 18 for the flange 17 of the cylinder 16.

The cylinder 16 is of considerably less diameter than the casing or shell 10 so that when the flange 17 is engaged with the seat 18 there will be a fluid space 24 concentrically of the cylinder. The outlet 23 leads from this space 24. The space 24 has communication with the space 21

through the perforations 25 provided in the cylinder 16 of those chambers 20 uncovered at their upper ends in a manner presently described.

As has been previously stated, the lower open end of the cylinder 16 is confronted by the end head 12 serving to close it, while within the flow space 21 and built into the casing or shell 10 is an upper baffle 26 which serves to close one of the chambers 20 in the cylinder 16 at the upper open end of the latter whereas the other chambers 20 of this cylinder remain open to the space 21 when such cylinder is at rest or rotating. The baffle 26 is fixed or stationarily held in the casing or shell 10.

Arranged above the end head 13 is a support 27 carrying a bearing bracket 28 in which is journaled a worm screw 29 driven from an electric motor 30 included in a power circuit 31. The worm screw 28 meshes with a worm gear 32 fixed to a stud shaft 33 provided with a beveled pinion 34 meshing with a beveled gear 35 fixed to the stem 15 of the cylinder 16. When the motor 30 is active power therefrom is transmitted to the cylinder 16 for the rotation of the same within the casing or shell 10. When the cylinder 16 is operated by the motor 30 the said cylinder will rotate slowly by reason of the gear ratio between the worm screw 29 and worm gear 32 meshing therewith.

The support 27 includes a bearing 35' in which is journaled a shaft 36 having fixed thereto valve opening and closing cams 37 and 38, respectively. On the stem 15 of the cylinder 16 is fixed a combined actuator and holding wheel 39 which at the under side thereof carries depending diametrically opposite striker pins 40 for engaging stepping projections 41 uniformly spaced to each other and extending from one face of a feed wheel 42 fixed to the shaft 36. This wheel 42 at the periphery thereof has holding pins 43 which are uniformly spaced from each other and each is adapted to be accommodated in single order in keeper notches 44 cut into the periphery of the wheel 39 diametrically opposite to each other and next to the striker pins 40 on said wheel.

Opening through the lower end head 12 of the casing or shell 10 is a discharge pipe 45 which leads from a single chamber 20 within the cylinder 16 for communication with these chambers 20 in single order. The pipe 45 is equipped with a valve working within the valve casing 46 and the stem 47 of this valve through a slip coupling 48 is connected with a throw rod 49 formed with an upper forked end 50 straddling the shaft 36 and having the tines of the fork thereof slidably engaged in guides 51 formed in the extension 52 from the support 27. The tines of the forked end 50 are provided with abutments 53 and 54, respectively. The abutment 53 is common to the opening cam 37 while the abutment 54 is common to the closing cam 38 so that the valve will open and close under the action of these cams. The rod 49 carries a collar 55 for a coiled compression spring 56 about said rod 49 and playing against the coupling 48 to hold the latter yieldably fixed with respect to said rod 49. The purpose of this coupling 48 is to avoid damage to the valve within its casing 46 when being closed through excessive closing stroke of the rod 49 under the action of the cam 38.

At that side of the cylinder 16 where one of the chambers 20 establishes communication with the pipe 45 is located an arcuate shaped baffle 57 which is stationarily supported by holding webs 58 joined therewith and with the casing or shell 10. This baffle 57 extends from the lower end head 12 to the flange 17 on the cylinder 16 and is outside of the latter so as to close the perforations 25 next thereto in said cylinder 16. This baffle 57 is formed with a slot 59 carried into a spread clearance 60 in the inner face of the said baffle 57 and in this manner communication will be had between the fluid space 24 and the cylinder 16.

The electric circuit 31 for the motor 30 includes a fluid pressure switch 61 and fluid pressure controlling the same is delivered thereto through a lead 62 opening into the casing or shell 10 at the side having the outlet 23. This switch under normal pressure within the casing or shell 10 remains open so that the motor 30 will be passive. When pressure of fluid is reduced within the shell or casing 10 the said switch 61 closes for the starting of the motor 30.

The switch 61 has coacting therewith an automatic latching device 63 controlled by a cam 64 on the rod 49. The purpose of the device 63 is to maintain the switch 61 closed and thus assurance will be had that the motor 30 will operate for the required period of time for the completion of the operation of the strainer.

In the operation of the strainer, assuming that the chambers 20 in the cylinder 16 are free of debris or foreign matter and fluid under normal pressure is flowing from the inlet 22 through the casing or shell 10 to the outlet 23, the switch 61 is open and the motor 30 passive. At this time the valve in the casing 46 is closed shutting off discharge through pipe 45 from the casing or shell 10. Now fluid flow exists from the inlet side of the casing or shell 10 to the outlet side thereof. This flow passes through the chambers 20 excepting the one covered by the baffles 26 and 57 thence through the perforations 25, the space 24 and discharged at the outlet side of the said casing or shell.

Now when leaves or other foreign matter collect within the uncovered chambers 20 in the cylinder 16 to clog the perforations 25 in this cylinder, there will be a drop in the pressure of fluid in the pipe 62 thus the switch 61 will close the circuit 31 and start the motor 30. The starting of the motor 30 drives the cylinder 16 causing it to turn thus bringing the normally covered chamber 20 which is entirely free of leaves or foreign matter into a position to restore normal pressure within the pipe 62. As the cylinder 16 turns the wheel 39 rotates and on every half revolution thereof drives the wheel 42 turning the shaft 36 so that the cams 37 and 38 will operate, these successively working for the opening and closing of the valve in the casing 46. On the opening of the valve in the casing 46, the leaves or other foreign matter can be discharged through the pipe 45 from each chamber 20 when covered. When the switch 61 is closed the motor will continue to be active or running. During the rotary cycle of the cylinder 16 the respective chambers 20 therein will be cleaned and this is brought about by fluid under pressure being admitted through the slot 59 and clearance 60 in the baffle 57 when the perforations 25 confront the said slot 59 and the clearance 60 while the cylinder 16 is moving. The flow of fluid through these perforations 25 from without to within the chamber covered will cause a dislodging of foreign matter and leaves from the said perforations 25 and this dislodged matter will pass from the said covered chamber into the pipe 45 and flow away therein. In this instance

there are shown six chambers **20** which receive pressure from the inlet side of the strainer and of this series fluid under pressure is admitted to five of these chambers directly to have such fluid pass from within outwardly through the perforations common to the said five chambers, that is to say, those uncovered.

When normal pressure of fluid exists in the casing or shell **10** the switch **61** remains open and the discharge pipe **45** is closed by the valve within the casing **46**. When leaves or other foreign matter accumulate within those chambers **20** in the cylinder **16** not covered, then pressure of the fluid drops within the casing or shell **10** and likewise a drop of pressure occurs within the pipe **62** whereupon the switch **61** instantly closes and the motor **30** starts so that this cylinder **16** will turn and the successive chambers **20** within said cylinder becoming cleaned and the debris or foreign matter therein discharged through the open pipe **45**. Subsequent to the return of fluid pressure to normal the motor **30** is stopped and the valve in the casing **46** closes shutting off further discharge through pipe **45**.

It is, of course, to be understood that through the wheel **42** in its coaction with wheel **39** a timing is set up so that at a determined period subsequent to the restoring of pressure in the casing or shell **10** the switch **61** will become opened and in this manner the motor **30** stopped thereby giving to the cylinder **16** the required number of revolutions to enable a thorough cleaning of the chambers **20** in this cylinder and the discharge of the collected matter therein through pipe **45**. Further, it is to be understood that through this timing the valve is likewise operated for the closing thereof in the pipe **45** and thus avoiding any waste of the fluid after the cleaning of the chambers **20** in the cylinder **16**.

The cleaning cycle requires two and one-half turns of the cylinder **16** constituting the strainer while the valve in the casing **45** is open somewhat less than this turning cycle of said strainer, the valve being wide open through about one and three-fourths turns of the said cylinder although the extent of opening of the valve can be increased yet it does not appear necessary or desirable.

The cylinder **16** is driven directly from the motor **30** while the wheel **42** in cooperation with the wheel **39** effects a proper timing for the operation of the valve in the casing **46** and also for the control of the device **63** while the cams **37** and **38** in cooperation raise and lower the said valve for the opening and closing thereof.

The particular combination of the electrical and mechanical features of the strainer constitute a full automatic control of the cleaning stream and cleaning action to the complete cessation of both, except when cleaning is needed. In the working of the strainer the debris is conveyed into chambers within the cylinder **16** without liability of scraping and wedging of the dirt in the conduit from which the same is being cleared.

What is claimed is:

1. In a strainer of the kind described, a fluid flow means, a rotatable strainer intersecting the flow means and having a portion shut off therefrom, a drain communicating with the shut off portion, a valve normally closing the drain, means operatively associated with the valve and strainer for opening and closing said valve and active for holding the latter open during the rotation of the strainer, an electric motor driving the strainer for opening the shut off portion thereof to the fluid flow means, a pressure operated switch controlling the motor and regulated by pressure in the flow means, and a latch coacting with the switch to hold the latter closed for the operation of the motor until full pressure has been established in the fluid flow means and thereafter until the cycle of operation is complete.

2. In a strainer of the kind described, a fluid flow means, a rotatable strainer intersecting the flow means and having a portion shut off therefrom, a drain communicating with the shut off portion, a valve normally closing the drain, means having connections with the strainer and operatively associated with the valve and said strainer for opening and closing said valve and active for holding the latter open during the rotation of the strainer, an electric motor driving the strainer for opening the shut off portion thereof to the fluid flow means, a pressure operated switch controlling the motor and regulated by pressure in the flow means, a latch coacting with the switch to hold the latter closed for the operation of the motor until full pressure has been established in the fluid flow means, and valve opening and closing cams included in said second-named means.

3. In a strainer of the kind described, a fluid flow means, a rotatable strainer intersecting the flow means and having a portion shut off therefrom, a drain communicating with the shut off portion, a valve normally closing the drain, means having connections with the strainer and operatively associated with the valve and said strainer for opening and closing said valve and active for holding the latter open during the rotation of the strainer, an electric motor driving the strainer for opening the shut off portion thereof to the fluid flow means, a pressure operated switch controlling the motor and regulated by pressure in the flow means, a latch coacting with the switch to hold the latter closed for the operation of the motor until full pressure has been established in the fluid flow means, valve opening and closing cams included in said second-named means, and means operating with said second-named means for relieving excessive closing movement to the valve.

THOMAS E. HAUGHT.