(12) INTERNATIONAL APPLICATION PUBLISHED UNDER THE PATENT COOPERATION TREATY (PCT)

(19) World Intellectual Property Organization
International Bureau

(43) International Publication Date
14 June 2012 (14.06.2012)

WIPO | PCT

(10) International Publication Number
WO 2012/078286 A1

(51) International Patent Classification:
B65B 63/02 (2006.01) *B65B 43/14* (2006.01)
B65B 61/18 (2006.01) *B65D 33/25* (2006.01)
B65B 43/12 (2006.01)

(21) International Application Number:
PCT/US2011/059717

(22) International Filing Date:
8 November 2011 (08.11.2011)

(25) Filing Language: English

(26) Publication Language: English

(30) Priority Data:
61/415,728 19 November 2010 (19.11.2010) US
12/963,235 8 December 2010 (08.12.2010) US

(71) Applicant *(for all designated States except US)*: **ILLINOIS TOOL WORKS INC.** [US/US]; 3600 West Lake Avenue, Glenview, IL 60026 (US).

(72) Inventors; and

(75) Inventors/Applicants *(for US only)*: **PIOTROWSKI, Stanley** [US/US]; c/o Illinois Tool Works Inc., 3600 West Lake Avenue, Glenview, IL 60026 (US). **MCDONALD, Daniel** [US/US]; c/o Illinois Tool Works Inc., 3600 West Lake Avenue, Glenview, IL 60026 (US). **CREVIER, Donald, Lee** [US/US]; c/o Illinois Tool Works Inc., 3600 West Lake Avenue, Glenview, IL 60026 (US). **SHARE, Lawrence** [US/US]; c/o Illinois Tool Works Inc., 3600 West Lake Avenue, Glenview, IL 60026 (US). **MOELLER, Thomas** [US/US]; c/o Illinois Tool Works Inc., 3600 West Lake Avenue, Glenview, IL 60026 (US). **LIND, Gary** [US/US]; c/o Illinois Tool Works Inc., 3600 West Lake Avenue, Glenview, IL 60026 (US).

(74) Agent: **BROWN, Ronald, E.**; Day Pitney LLP, 7 Times Square, New York, NY 10036-7311 (US).

(81) Designated States *(unless otherwise indicated, for every kind of national protection available)*: AE, AG, AL, AM, AO, AT, AU, AZ, BA, BB, BG, BH, BR, BW, BY, BZ, CA, CH, CL, CN, CO, CR, CU, CZ, DE, DK, DM, DO,

[Continued on next page]

(54) Title: AUTOMATED VERTICAL FORM, FILL, COMPRESSION, SEAL AND CUT-OFF PACKAGING SYSTEM FOR COMPRESSIBLE GOODS

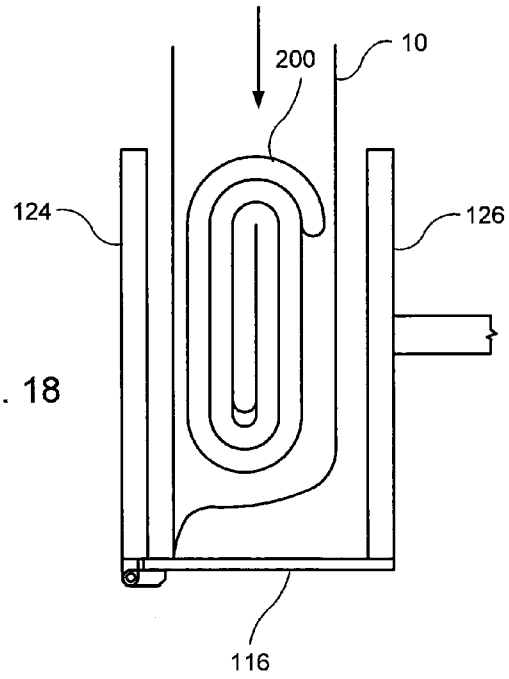

FIG. 18

(57) Abstract: The disclosure relates to a method and apparatus for compressing woven material or other compressible material, such as, but not limited to, a comforter set or bedding set. The compressible goods are engaged by a gantry system, compressed, and loaded vertically into the open bottom of a vertically oriented inverted bag, wherein the bags are typically configured as a chain of such bags. The compression step drives out a substantial portion of the air from the bag. The bags are then sealed. The closed bottom of the bag may include a closed zipper configuration, possibly in combination with a peel seal.

WO 2012/078286 A1

DZ, EC, EE, EG, ES, FI, GB, GD, GE, GH, GM, GT, HN, HR, HU, ID, IL, IN, IS, JP, KE, KG, KM, KN, KP, KR, KZ, LA, LC, LK, LR, LS, LT, LU, LY, MA, MD, ME, MG, MK, MN, MW, MX, MY, MZ, NA, NG, NI, NO, NZ, OM, PE, PG, PH, PL, PT, QA, RO, RS, RU, RW, SC, SD, SE, SG, SK, SL, SM, ST, SV, SY, TH, TJ, TM, TN, TR, TT, TZ, UA, UG, US, UZ, VC, VN, ZA, ZM, ZW.

(84) Designated States *(unless otherwise indicated, for every kind of regional protection available)*: ARIPO (BW, GH, GM, KE, LR, LS, MW, MZ, NA, RW, SD, SL, SZ, TZ, UG, ZM, ZW), Eurasian (AM, AZ, BY, KG, KZ, MD, RU, TJ, TM), European (AL, AT, BE, BG, CH, CY, CZ, DE, DK, EE, ES, FI, FR, GB, GR, HR, HU, IE, IS, IT, LT, LU, LV, MC, MK, MT, NL, NO, PL, PT, RO, RS, SE, SI, SK, SM, TR), OAPI (BF, BJ, CF, CG, CI, CM, GA, GN, GQ, GW, ML, MR, NE, SN, TD, TG).

Published:

— *with international search report (Art. 21(3))*

— *before the expiration of the time limit for amending the claims and to be republished in the event of receipt of amendments (Rule 48.2(h))*

— *with information concerning one or more priority claims considered void (Rule 26bis.2(d))*

AUTOMATED VERTICAL FORM, FILL, COMPRESSION, SEAL AND CUT-OFF PACKAGING SYSTEM FOR COMPRESSIBLE GOODS

BACKGROUND OF THE DISCLOSURE

[0001] This application claims priority under 35 U.S.C. §119(e) of provisional patent application 61/415,728 filed on November 19, 2010. This application further is a continuation-in-part of U.S. patent application serial no. 12/963,235, filed on December 8, 2010 which claims priority under 35 U.S.C. §119(e) of provisional patent application serial no. 61/359,133, filed on June 28, 2010; and provisional application serial number 61/304,734, filed on February 15, 2010, the contents of all of which are hereby incorporated by reference in their entirety. Additionally, application serial no. 12/963,235 is a continuation-in-part of application serial numbers 12/823,328 and 12/823,331, both filed June 25, 2010 and both claiming priority under 35 U.S.C. §119(e) of said provisional patent application serial number 61/304,734, filed on February 15, 2010, the contents of all of which are hereby incorporated by reference in their entirety, and the priority of all of which are claimed by the present application.

Field of the Disclosure

[0002] The present disclosure relates to a packaging system for automated, high-speed production capabilities in Form, Fill, Compression and Seal (FFCS) applications. These applications include intermittent motion systems or continuous motion systems, such as, but not limited to, linear or straight-line packaging systems, rotary, carousel or overwrap applications. The products being packaged are compressible goods, such as, but not limited to, bedding materials, towels, textile covers for bathroom fixtures and other cloth or textile products.

Description of the Prior Art

[0003] In the prior art, it is well known to package woven fabric articles or compressible materials, such as bedding material, in a package or bag made from polymeric or similar material. However, the resulting packaging can be bulky which increases transportation, storage and display costs throughout the chain of commerce. Such a package can further require increased corrugated packaging, thereby increasing the costs throughout

the chain of commerce. Similarly, a consumer may be less prone to buy an unwieldy package.

[0004] The storage of polymeric bag within a box is disclosed in U.S. Patent No. 7,588,160, entitled "Combined Storage Apparatus", issued on September 15, 2009 to Chen.

[0005] While the embodiments disclosed in parent application serial nos. 12/823,823 and 12/823,331, both filed June 25, 2010 and entitled "Method and Apparatus for Compressing and Holding in Compression Woven Fabric Articles", as well as parent application serial no. 12/963,235, filed on December 8, 2010 and entitled "Form Fill Seal Packaging Method and Apparatus for Compressible Goods" have been satisfactory for their intended purposes, further improvements are desired, such as increasing the manufacturing speed and increasing the automation of the method and apparatus.

SUMMARY AND OBJECTS OF THE DISCLOSURE

[0006] It is therefore an object of the present disclosure to provide further improvements in a method and apparatus for compressing woven fabric articles or compressible materials, such as, but not limited to, bedding materials, in order to provide a compact and aesthetically pleasing package. These improvements may include increasing the manufacturing speed and increasing the automation of the method and apparatus.

[0007] This and other objects are attained by the present disclosure by providing a method and apparatus in which embodiments include a chain-linked open bottom vacuum bag, which may optionally include a reclosable zipper with a peel seal. Other embodiments may use open bottom non-vacuum bags, such as one-time-use laminate film bags.

[0008] Embodiments of the present disclosure utilize an overhead gantry system to vertically load open bottom chain-linked bags that have loops at the top of the bag that ride along a set of machine guide rails or beaded thickened material on the top of the bag that rides within a slot in the bottom of the machine guide rails. In these applications, the portion of the bags facing up is the inverted open bottom of the bags. Typically, the bags move horizontally along the guide rails and are loaded vertically from above. The positioning of the rails with respect to each other determines how open or closed (i.e., how spread apart) the open bottoms of the bags are. The rails are typically configured in a closely-spaced parallel relationship for

transport into and through the system. However, the rails are separated in other locations in order to open the open bottom of the bag and to provide for filling or loading of the product. After filling, the rails are returned to the closely-spaced parallel relationship for the compression and film-to-film sealing steps.

BRIEF DESCRIPTION OF THE DRAWINGS

[0009] Further objects and advantages of the disclosure will become apparent from the following description and from the accompanying drawings, wherein:

[00010] Figure 1 is a plan view of inverted open bottom chain-linked bags which may be used in embodiments of the present disclosure.

[00011] Figure 2A is a cross-sectional view along plane 2-2 of Figure 1.

[00012] Figure 2B is an alternative cross-sectional view along plane 2-2 of Figure 1.

[00013] Figure 3 illustrates how the open configuration of a chain-linked bag is achieved by the guide rails.

[00014] Figure 4 is a plan overhead view of an embodiment of the present disclosure, including separate product loading and compression/seal stations.

[00015] Figure 5 is a plan overhead view of an embodiment of the present disclosure, including combined product loading and compression seal stations.

[00016] Figure 6 is a side plan view of a gantry system of an embodiment of the present disclosure, illustrating the gantry in a position to engage a compressible item.

[00017] Figure 7 is a side plan view of a gantry system of an embodiment of the present disclosure, illustrating the gantry in a position to insert the compressible item, in a compressed state, into an inverted open bottom bag.

[00018] Figure 8 is a perspective view of an embodiment of the compression/seal station of the present disclosure.

[00019] Figure 9 is a perspective view in the area of the sealing station of an embodiment of the present disclosure.

[00020] Figure 10 is a perspective view of closed seal jaws in the sealing station of an embodiment of the present disclosure.

[00021] Figure 11 is a perspective view of a vertical grabber approaching the compressible goods in an embodiment of the present disclosure.

[00022] Figure 12 is a perspective view of a vertical grabber engaging the compressible goods in an embodiment of the present disclosure.

[00023] Figure 13 is a perspective view of swinging type movable rails of an embodiment of the present disclosure, shown open for product loading.

[00024] Figure 14 is a perspective view of swinging type movable rails of an embodiment of the present disclosure, shown closed for product compression and sealing.

[00025] Figure 15 is a perspective view of gooseneck movable rails of an embodiment of the present disclosure, shown open for product loading.

[0010] Figure 16 is a perspective view of gooseneck movable rails of an embodiment of the present disclosure, shown closed for product compression and sealing.

[00026] Figure 17 is a cross-sectional view of a zipper structure which may be used in an embodiment of the present disclosure.

[00027] Figure 18 is a cross-sectional view of compressible goods, prior to compression by an embodiment of the present disclosure.

[00028] Figure 19 is a cross-sectional view of compressible goods, after compression by an embodiment of the present disclosure.

[00029] Figure 20 is a schematic of a series of inverted chain-linked open bottom bags for an embodiment of the present disclosure.

[00030] Figure 21 is a schematic of a series of inverted chain-linked open bottom bags as they progress through the method and apparatus of an embodiment of the present disclosure.

[00031] Figure 22a is a cross-sectional view of male and female zipper profiles which may be incorporated into the inverted chain-linked open bottom bags of an embodiment of the present disclosure.

[00032] Figure 22b is a cross-sectional view of a Z-fold in the walls of the inverted chain-linked open bottom bags of an embodiment of the present disclosure.

[00033] Figure 22c is a perspective view of a continuous film web which can be further processed into chain-linked open bottom bags in an embodiment of the present disclosure.

DETAILED DESCRIPTION OF THE PREFERRED EMBODIMENTS

[00034] Referring now to the drawings in detail wherein like numerals indicate like elements throughout the several views, one sees that Figure 1 is a plan view of inverted open bottom chain-linked bags 10 (which may be configured as vacuum bags) which may be used in embodiments of the present disclosure, while Figures 2A and 2B are cross-sectional views thereof. Bags 10 include first and second walls 12, 14 formed from polymeric material, such as, but not limited to, nylon outer/polyethylene inner laminate film. First and second walls 12, 14 are joined together at the edges thereof by side seals 16, 18. Bags 10 are shown in an inverted configuration so that the top 20 is shown at the lower portion of Figures 1, 2A and 2B. The top 20 may be open or include a zipper 22. Additionally, the top 20 may be formed by a fold between the material of first and second walls 12, 14 and the subsequent opening by the consumer may include a line of weakness or similar construction at element 22 in place of a zipper. First and second walls 12, 14 typically include respective lines of perforations 24, 26 or similar lines of weakness downwardly adjacent from an upper edge of the open bottom 28 in an inverted configuration. Side seals 16, 18 typically do not extend above lines of perforations 24, 26, so that first and second walls 12, 14 are separated near the inverted lower edge 30 thereof. First and second walls 12, 14 terminate in respective first and second loops 32, 34 at the inverted lower edges thereof. As shown in Figure 2A, first and second loops 32, 34 engage and are therefore guided by respective first and second guide rods 40, 42. Alternately, as shown in Figure 2B, first and second walls 12, 14 can terminate in respective first and second enlarged or beaded thickened portions 41, 43 which are engaged within the interior of first and second guide rods 40, 42, so that the first and second walls 12, 14 pass through respective first and second slots 45, 47 formed in the bottom of respective first and second guide rods 40, 42, thereby retaining first and second walls 12, 14 but allowing horizontal motion thereof. As shown in Figure 3, first and second guide rods 40, 42 can be in a closely-spaced parallel relationship for lateral transportation of the bags 10, or can be spaced apart as shown at bag 10', so that the open bottom 28 is spread wide open to receive

the product to be packaged, such as, but not limited to, compressible material. Additionally, as illustrated in Figure 1, first and second guide rods 40, 42 optionally may have apertures 34 formed in the walls thereof, so that air can be forced down the length of first and second guide rods 40, 42, exiting through the apertures, thereby reducing the drag or friction of the bags 10 against the first and second guide rods 40, 42 and thereby acting as air bearings in order to facilitate smoother bag transport.

[00035] Figure 4 is an overhead view of an embodiment of the apparatus 100 of the present disclosure. A conveyor belt 102 is provided which transports a succession of compressible goods 200 in a horizontal direction generally parallel to first and second guide rods 40, 42 so as to arrive at gantry system 104. Compressible goods 200 include, but are not limited to, bedding materials, towels, textile covers for bathroom fixtures and other cloth or textile products.

[00036] The operation of gantry system 104 is illustrated in Figures 6 and 7. Gantry system 104 includes gripper 106 with upper and lower jaws 108, 110. From the position shown in Figure 6. The gripper 106 moves horizontally, in a direction perpendicular to the direction of travel of conveyor belt 102, and toward the compressible good 200 in order to engage compressible good 200 between upper and lower jaws 108, 110 and compress the compressible good 200 to a pre-determined thickness. The gripper 106 then moves horizontally and perpendicularly away from conveyor belt 102 in order to position the compressible good 200 over the loading station 114 wherein first and second guide rods 40, 42 are separated in order to provide an opening for the insertion of the compressible good 200 into the inverted open bottom 28 of a bag 10 positioned within loading station 114. The gripper 106 then rotates ninety degrees so that the upper and lower jaws 108, 110 are pointed downwardly toward inverted open bottom 28 of bag 10 as shown in Figure 7. The gripper 106 is then moved vertically downward so as to insert the compressible good 200 into the open bottom 28 of bag 10. Upper and lower jaws 108, 110 then separate thereby releasing the compressible good 200 into bag 10. Support conveyor belt 116 (shown in Figures 4, 5 and 7) may be provided underneath the bag 10 to reduce the stress put onto the bag 10 during loading and further to move or index in unison with the movement or indexing of bag 10 in aid in the transport of bag 10, particularly after being filled with compressible good 200 (the transport or indexing of the chain of bags is typically performed by bag pulling device 117, shown at the far left of Figure 4). The gripper 106 then moves vertically upward and rotates

so as to return to the original position shown in Figure 6, ready to engage a successive compressible good 200. During this movement of the gripper 106, typically the chain of bags 10 is indexed or transported in the leftward direction in the orientation shown in Figure 4. After being indexed one or more times (depending upon the distance between loading station 114 and compression/sealing station 120), the bag 10 with compressible good 200 is delivered to compression/sealing station 120, which is illustrated in Figure 4, and in further detail in Figures 8, 9, 10, 18 and 19. Compression/sealing station 120 includes an open frame 122 with stationary back plate 124 and reciprocating pressure plate 126 therewithin (back plate 124 is shown in Figure 4, but has removed from Figure 8 for purposes of clarity). Side plates 128, 130 (forming a C-shape) are positioned at the ends of stationary back plate 124 at a perpendicular position thereto, thereby allowing the pressure plate 126 to compress the compressible good 200 within bag 10 as shown in Figure 19. It has been found that a force of at least 2.5 to 3.5 pounds per square inch typically is required for sufficient compression of most compressible materials, such as, but not limited to, woven textile or cloth, particularly those frequently used for bedding materials. To provide additional air removal prior to the sealing step, deflators are provided, which are soft foam pads located on and just above both of the symmetrical sets of compression plates. These help remove much of the remaining air from the bag 10 prior to the sealing step. To ensure that the film panels of first and second walls 12, 14 are substantially wrinkle free and flat relative to each other, a series of rubber rollers 133 (see Figures 9 and 10) are placed on the upper and lower surfaces of both opposing film-to-film heat seal jaws 134, 136. These rubber rollers 133 are set in an alternating pattern, on the film-to-film heat seal jaws 134, 136, along their entire length. All of these rubber rollers 133 are inboard of the film-to-film heat seal jaws 134, 136, so that they contact and act on the first and second walls 12, 14 prior to the sealing step. The film web of the first and second walls 12, 14 forming the bag 10, which contains the compressible good 200, remains chain-linked to adjacent bags 10. The bags 10 are held in fixed positions so that the rubber rollers 133 cause film web of first and second walls 12, 14 to travel a longer path or greater distance in the same linear dimension. In other words, the film webs are formed to zig-zag between the rubber rollers 133, thereby resulting in the film webs being very flat and substantially wrinkle free, in order to optimize the film-to-film heat sealing. In addition to the rubber rollers 133, there are film tensioning devices or film spreaders, which contact the film webs on both the front and back film panels and one each end, near the cross-seals to further render both film webs flat.

[00037] Immediately after the compression step, reciprocating film-to-film heat seal jaws 134, 136 reciprocate towards each other, from the position shown in Figure 9 to the position shown in Figure 10, to form a bottom seal below the lines of perforations or lines of weakness 24, 26 (i.e., above the lines of perforation or weakness 24, 26 if the bag 10 is viewed in its non-inverted configuration, thereby allowing the bag 10 to subsequently be torn away or separated), thereby closing the inverted open bottom of the bag 10 with the compressible good 200 therewithin in a compressed state. The air-tightness of the resulting bag 10 causes the compressible good 200 to tend to remain in a compressed state. The chain of bags 10 is subsequently indexed and the bag 10 is separated from the chain by cut-off mechanism 138 which is positioned with bag pulling device 117. Additionally, the lines of weakness 24, 26 are torn to separate the resulting filled, compressed and sealed bag 10 from the first and second guide rods 40, 42, as well as from the portion of the first and second walls 12, 14 between the lines of perforation or weakness 24, 26 and the first and second loops 32, 34.

[00038] Figure 5 illustrates an embodiment similar to that of Figure 4, except that compression/sealing station 120 is positioned within or combined with loading station 114. In this embodiment, the compression and sealing operations can be performed immediately after the compressible good 200 is placed within bag 10, without any intervening index or transport. The indexing or transporting steps are formed before and after the combination of steps of loading, compressing and sealing. This embodiment requires that the first and second guide rods 40, 42 at loading station 114 be flexible (such as shown in Figures 15 and 16, showing the opened and closed positions, respectively, as implemented by flexible portions 115) or otherwise movable (such as a pneumatically driven swinging configuration as shown in Figures 13 and 14) so as to have a first open position for loading of compressible good 200 (i.e., so that compressible good can pass between first and second guide rods 40, 42 and into an inverted open bottom 28 of a bag 10) as shown in Figures 13 and 15 and a second closed position for the sealing operation (i.e., so that the edges of first and second walls 12, 14 can be positioned against each other for the sealing operation) as shown in Figures 14 and 16.

[00039] An alternative to the gantry system 104 of Figures 6 and 7 is illustrated in Figures 11 and 12. A vertically reciprocating grabber 180 descends to grab or engage a compressible good 200 from conveyor 102. The vertically reciprocating grabber 180 then

moves horizontally (which may or may not include a momentary vertical lift), positions the compressible good 200 over the inverted open bottom 28 of a bag 10, and descends vertically to insert the compressible good into the bag 10 through the inverted open bottom.

[00040] Figure 17 illustrates a cross section of zipper structure 300 which may be used as zipper 22 in some embodiments of top 20 of bag 10. First and second walls 12, 14 are shown, with the consumer side or outside of the bag 10 oriented at the right of the illustrated embodiment, and the product side or inside of the bag 10 oriented to the left of the illustrated embodiment. Zipper structure 300 includes first and second extended flanges 302, 304. A typically length of first and second extended flanges 302, 304 is 1.5 inches, but those skilled in the art will recognize, after review of this disclosure, that different applications may have different advantageous lengths. First wall 12 is sealed to the first extended flange 302 at first seal 306, adjacent to the consumer side end 308 of first extended flange 302. Second wall 14 is sealed to second extended flange 304 at second and third seals 310, 312 adjacent to the respective product side end 314 and consumer side end 316 of second extended flange 304. First, second and third seals 306, 310, 312 are typically heat seals. Peel seal 320, typically pre-activated, joins the product side end 318 of first extended flange 302 with product side end 314 of second extended flange 304. First and second male zipper elements 326, 328 are formed on an interior of first extended flange 302 at positions between the first seal 306 and the peel seal 320. A typical distance of separation between first and second male zipper elements 326, 328 is 0.465 inches, but those skilled in the art will recognize, after review of the disclosure, that different applications may have different advantageous separations. Similarly, corresponding first and second female zipper elements 330, 332 are formed on an interior of second extended flange 304 between third seal 312 and peel seal 320, aligned so as to interlock with respective first and second male zipper elements 326, 328. In this configuration, the peel seal 320 is intended to maintain the leak-resistant (i.e., air-tight or nearly air-tight) configuration prior to opening by the user. In other words, the peel seal 320 is intended to reduce or eliminate air leaks through the zipper structure 300. The user would first separate the male zipper elements 326, 328 from the female zipper elements 330, 332, and would then manually separate the peel seal 320 in order to access the contents of the bag 10, namely, the compressible good 200.

[00041] Figures 20 and 21 illustrate further embodiments of the chain of inverted open bottom chain-linked bags 10 which may be used in embodiments of the present disclosure.

Figure 20 illustrates a sequence of bags 10 which are inverted so that open bottom 28 faces upwardly. The bags 10 are connected to neighboring bags at points 11. These connections, of course, are typically necessary for the transport of the bags 10 in the embodiments described above. As shown in Figure 21, the bags 10 may be fan-folded and formed in a stack 144 which is placed into container 145 from which bags 10 are dispensed. Figure 21 further includes an illustration of the first and second guide rods 40, 42, both in the parallel closely-spaced and the separated configuration as previously described, as well as the insertion of the compressible goods 200, as previously described.

[00042] Figures 22a, 22b and 22c illustrate a method for manufacturing an alternative embodiment of the chain of bags 10. As illustrated in Figure 22a, first and second extruders 500, 502 extrude male and female zipper profiles 504, 506, respectively onto sheet 508 of polymeric material. As illustrated in Figure 22b, sheet 508 is folded at first fold 510 between the male and female profiles 504, 506 so as to bring profiles 504, 506 together in an interlocked configuration. Sheet 508 is folded at second fold 512 adjacent to male zipper profile 504 thereby forming a Z-configuration. As illustrated in Figure 22c, second fold 512 can be unfolded so that sheet 508 forms the first and second walls 12, 14 of a chain of bags 10, wherein the successive bags 10 are separated by cross-seals 13 which join first and second walls 12, 14. Subsequently, to form separate bags 10, the cross-seals 13 are cut along a vertical (in the illustrated orientation) mid-line thereof.

[00043] In summary, to use the system and apparatus of the present disclosure, a user typically provides a drive concatenated chain of bags 10, which are inverted so as to present the open bottom 28 upwardly. The user further provides a series of compressible goods which are sequentially loaded into the bags. The goods are then compressed and a seal is formed thereby forming the bottom seal of the bag 10 when oriented normally (i.e., not inverted). The bags are then cut from the chain and provided into the stream of commerce.

[00044] Thus the several aforementioned objects and advantages are most effectively attained. Although preferred embodiments of the invention have been disclosed and described in detail herein, it should be understood that this invention is in no sense limited thereby and its scope is to be determined by that of the appended claims.

CLAIMS

What is Claimed is:

1. A method, including the steps of:

providing a bag with a first end and a second end, including a closure at the first end and an opening at the second end;

orienting the bag whereby the second end is facing upwardly;

vertically placing compressible material within the bag through the opening;

compressing the bag thereby expelling a portion of air from the bag; and

sealing the opening.

2. The method of Claim 1, wherein the closure is a reclosable zipper.

3. The method of Claim 2 wherein the compressible material includes woven material.

4. The method of Claim 1 wherein the compressible material includes textile or cloth.

5. The method of Claim 4 wherein the step of compressing is performed with at least 2.5 pounds per square inch of force applied to the bag.

6. The method of Claim 4 wherein the step of compressing is performed with at least 3.5 pounds per square inch of force applied to the bag.

7. The method of Claim 4 wherein the reclosable zipper includes two interlocking profiles which, when interlocked, form a leak-resistant seal.

8. The method of Claim 7 wherein a peel seal is provided adjacent to the reclosable zipper.

9. The method of Claim 1 wherein the step of providing a bag includes the step of providing a series of bags.

10. The method of Claim 9 wherein the step of providing a series of bags includes the step of providing a stack of bags include apertures through which at least one pin passes.

11. The method of Claim 10 wherein the sequential chain of bags is provided in a stack.

12. The method of Claim 11 wherein the step of placing compressible material within the bag through the opening is performed vertically.

13. The method of Claim 1 further including the step of extruding first and second zipper profiles onto a single sheet of web and folding the web align the first and second zipper profiles with each other and to form walls of the bag.

14. The method of Claim 1 wherein the bags and the compressible material are provided in a horizontal direction.

15. The method of Claim 14 wherein the bags are provided in a horizontal direction by providing at least one loop on walls of the bag and further providing at least one horizontal guide bar which is engaged by the at least one loop, whereby the bag can slide along the at least one horizontal guide bar.

16. The method of Claim 14 wherein the bags are provided in a horizontal direction by providing a thickened portion on walls of the bag and providing at least one horizontal structure which includes a slot through which a portion of the wall below the thickened portion passes, the thickened portion riding above the slot, whereby the bag can slide along the horizontal structure.

17. The method of Claim 16 wherein the at least one horizontal structure includes first and second guide bars.

18. The method of Claim 14 wherein the at least one horizontal guide bar includes first and second guide bars, wherein the first and second guide bars have at least a portion which a closely-parallel spaced and at least another portion wherein the first and second guide bars are sufficiently separated to allow the step of vertically placing compressible material.

19. The method of Claim 17 wherein the at least one horizontal guide bar includes first and second guide bars, and wherein at least one of the first and second guide bars has a swinging configuration, whereby the first and second guide bars can be placed in a first position wherein the first and second guide bars are closely-parallel spaced and can further be placed in a second position wherein the first and second guide bars are sufficiently separated to allow the step of vertically placing compressible material.

20. The method of Claim 17 wherein the at least one horizontal guide bar includes first and second guide bars, and wherein at least one of the first and second guide bars includes at least one flexible portion, whereby the first and second guide bars can be placed in a first position wherein the first and second guide bars are closely-parallel spaced and can further be placed in a second position wherein the first and second guide bars are sufficiently separated to allow the step of vertically placing compressible material.

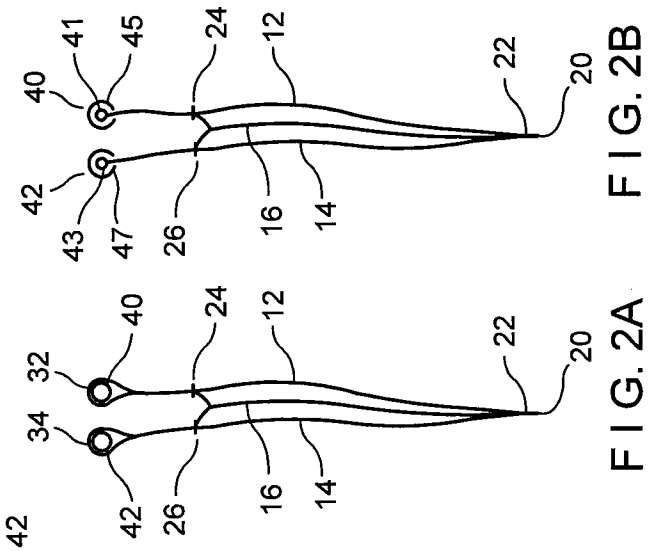

FIG. 2B

FIG. 2A

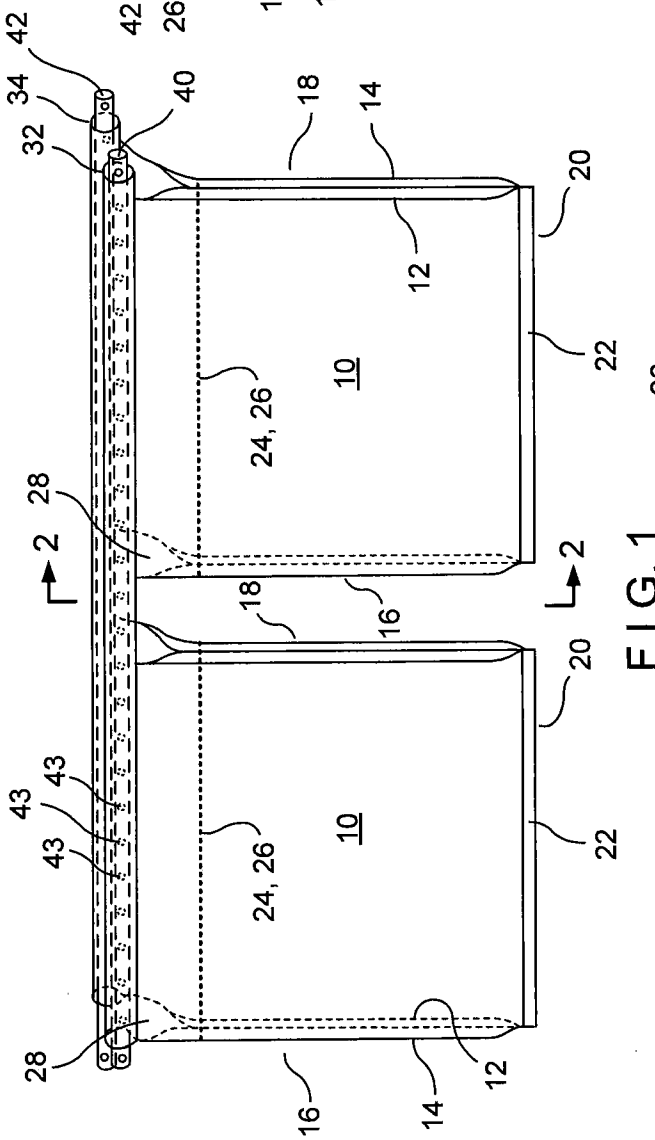

FIG. 1

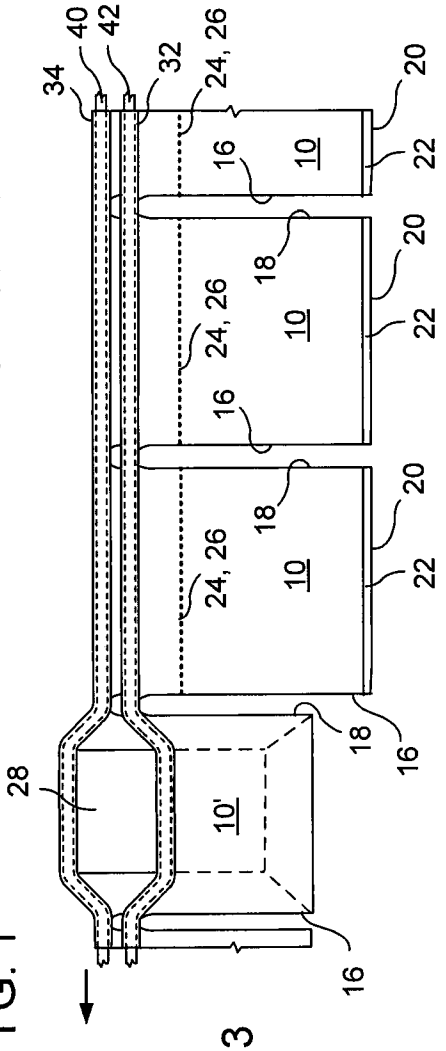

FIG. 3

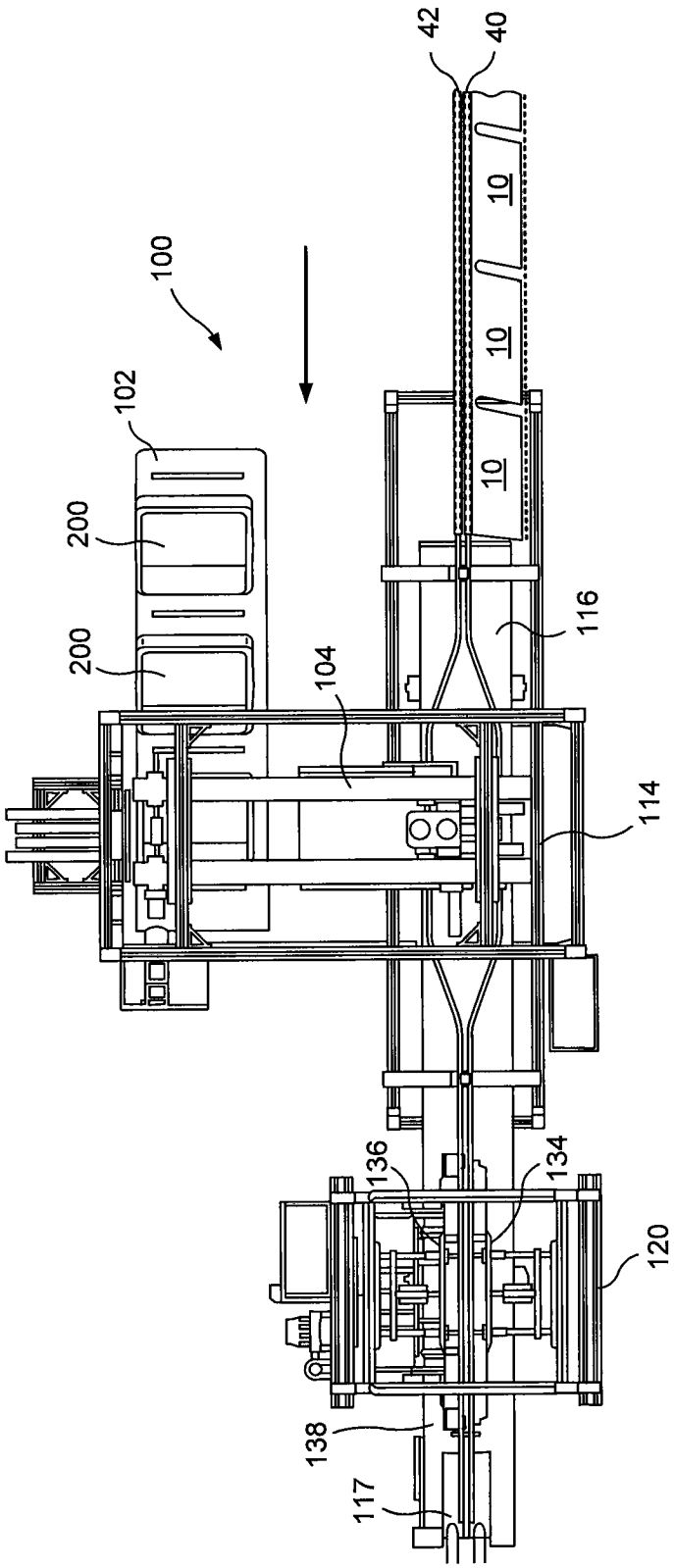

FIG. 4

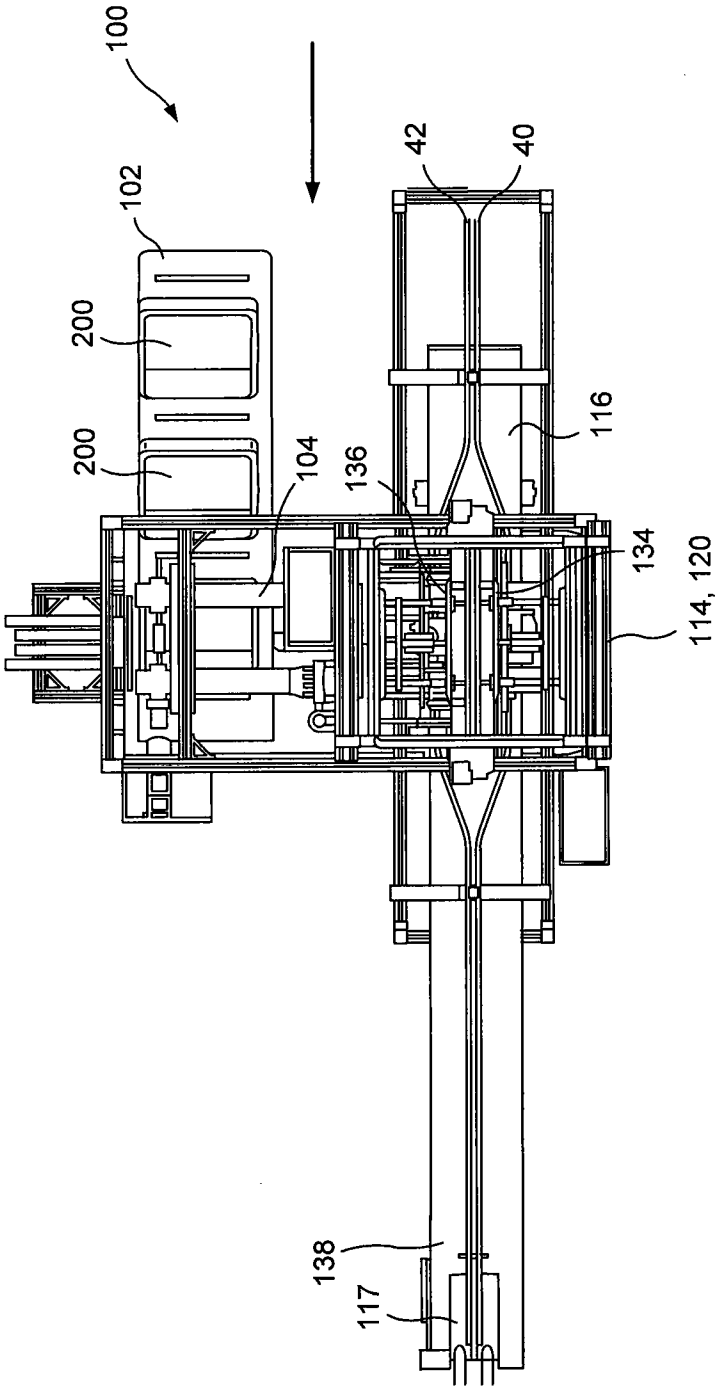

FIG. 5

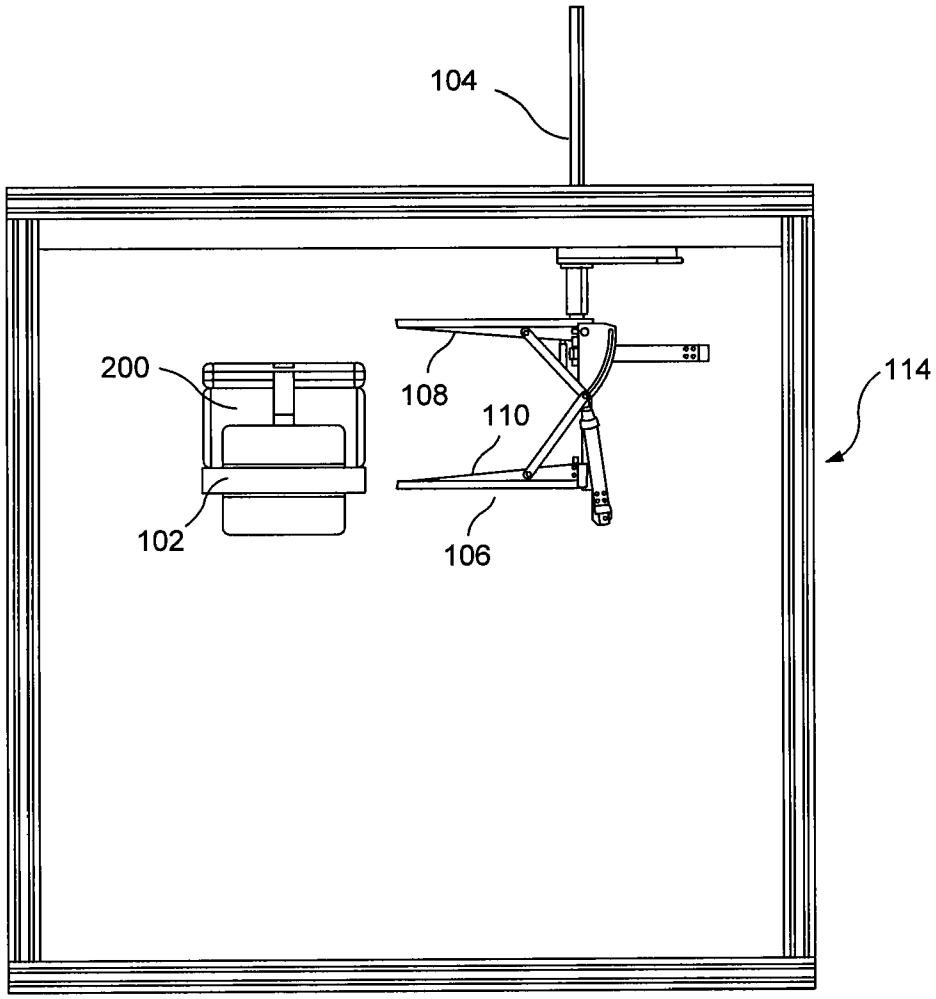

FIG. 6

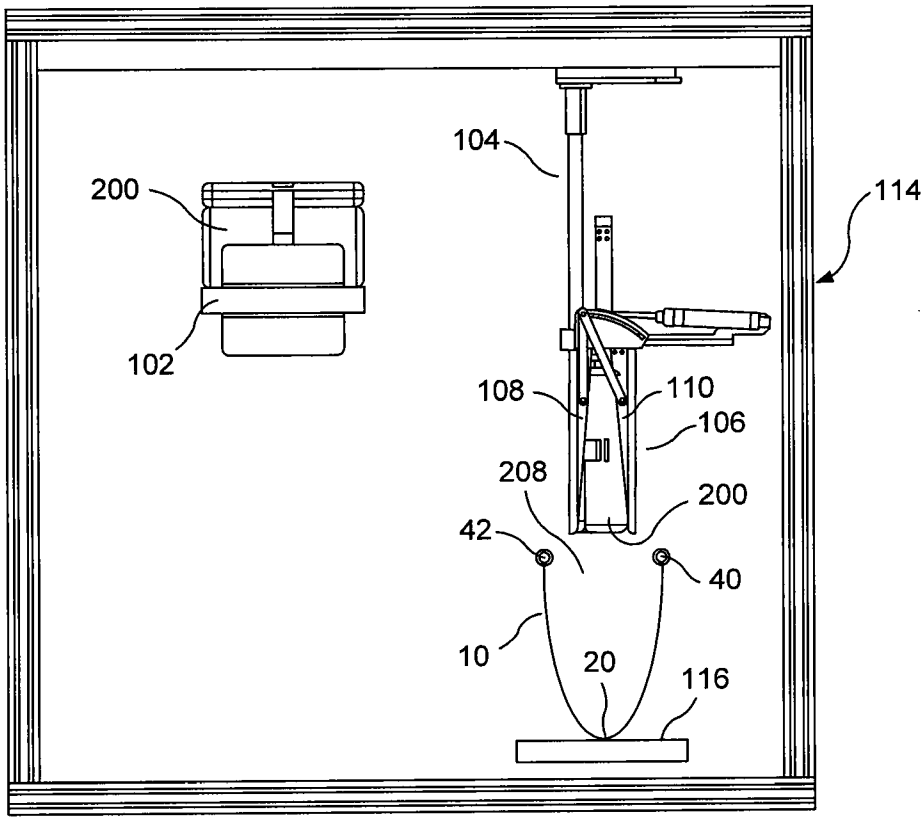

FIG. 7

FIG. 8

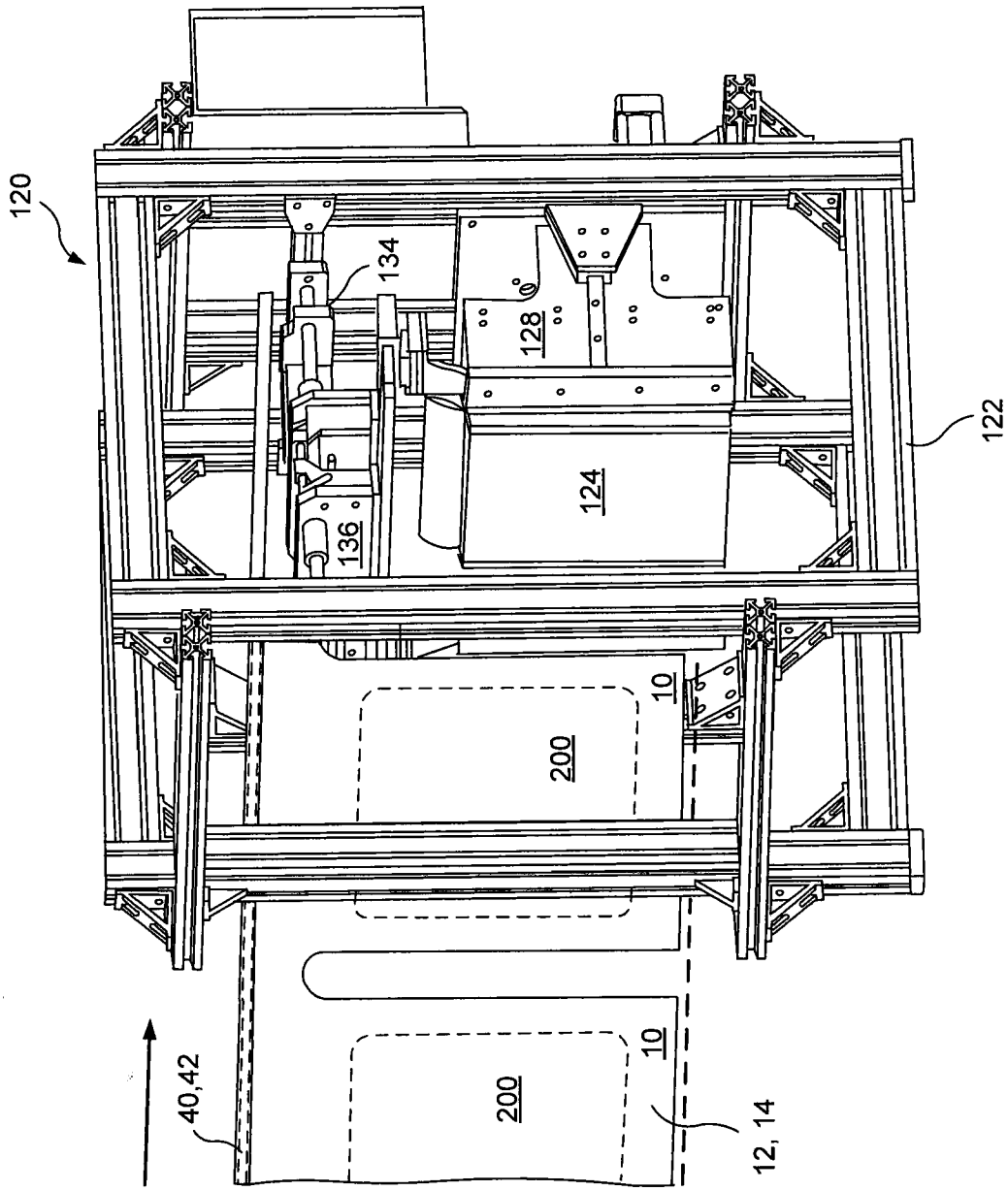

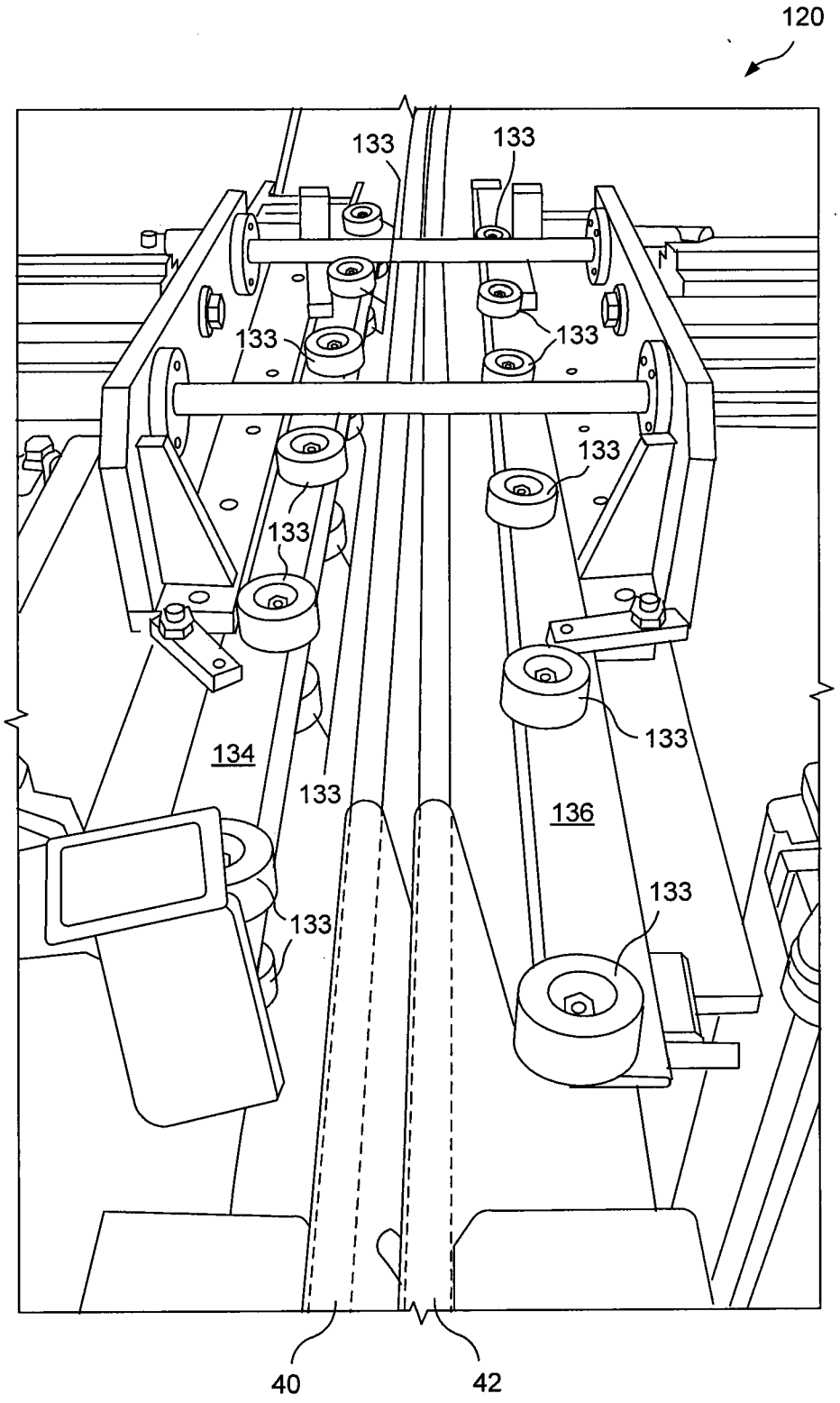

FIG. 9

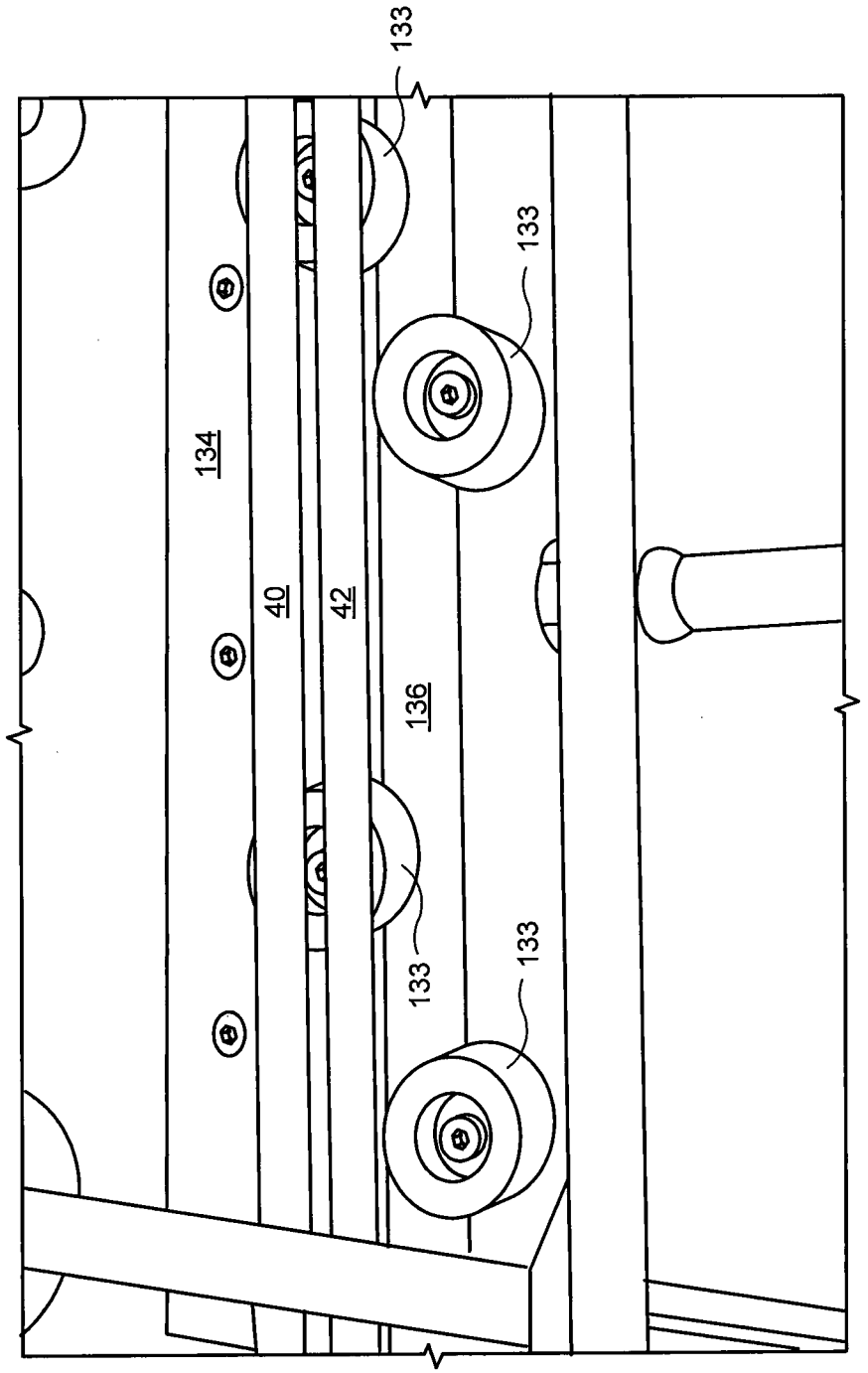

FIG. 10

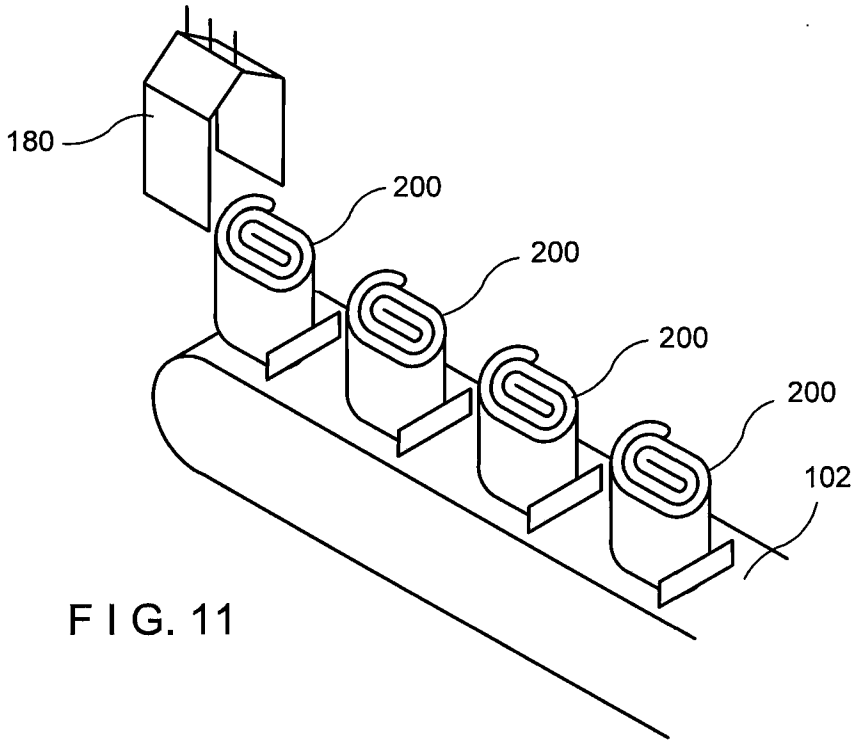

FIG. 11

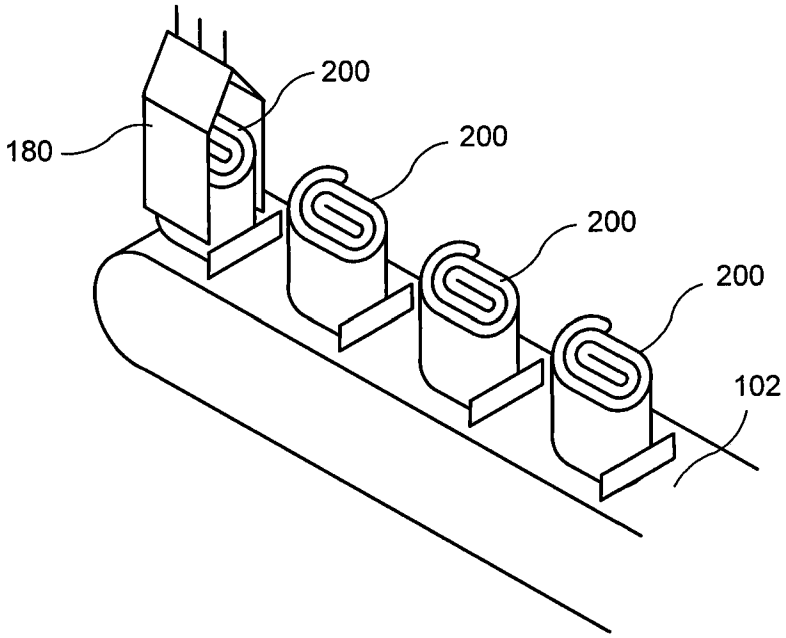

FIG. 12

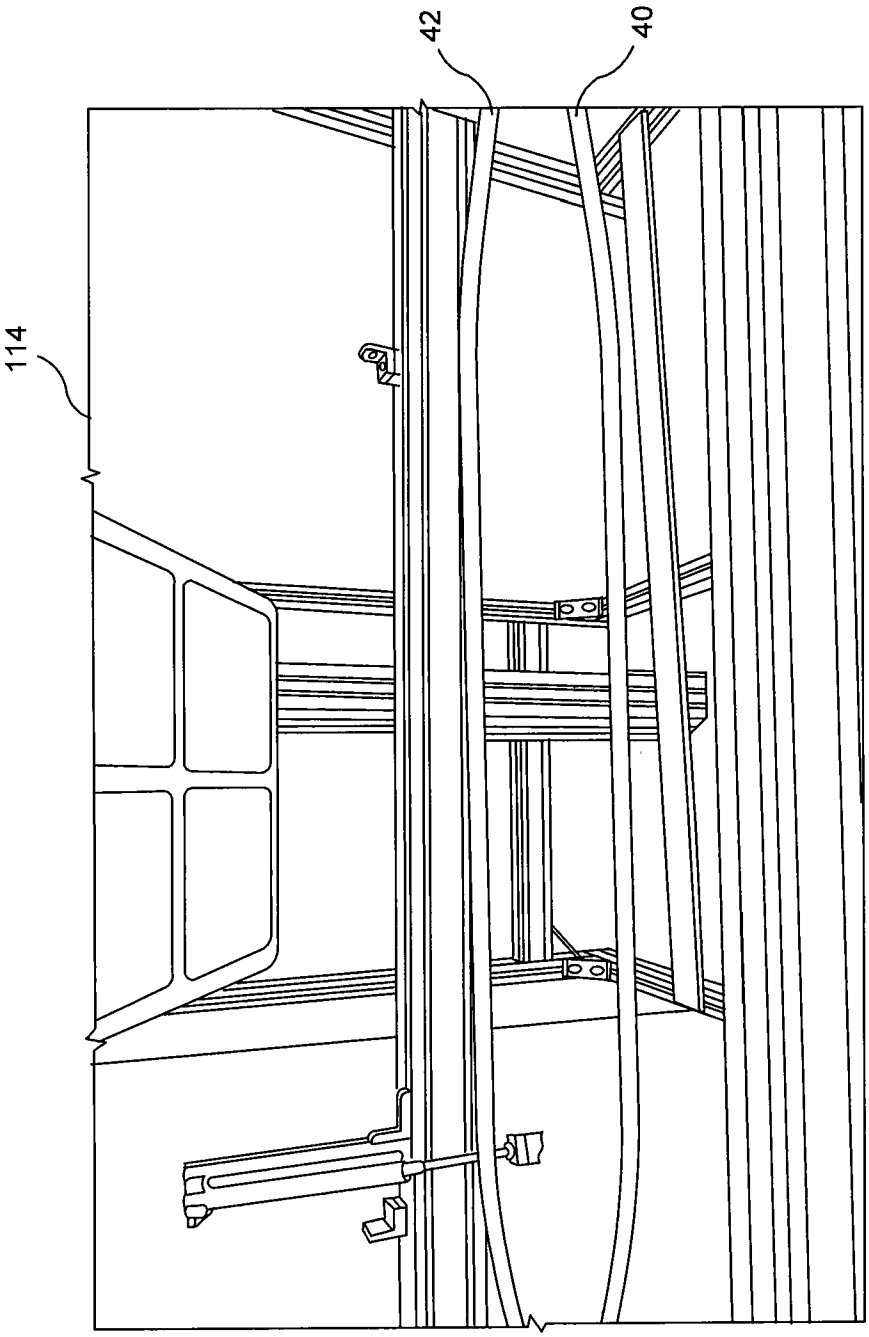

FIG. 13

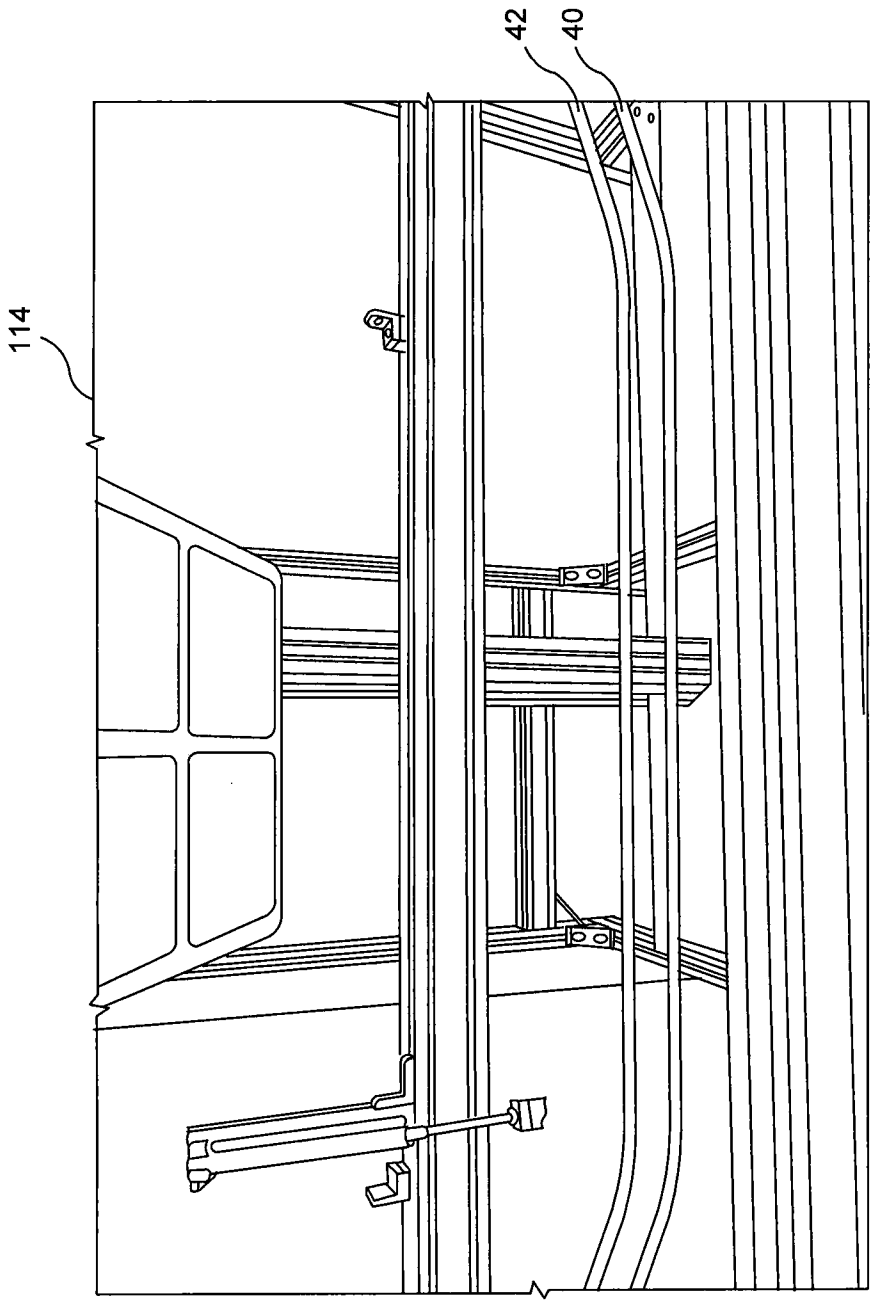

FIG. 14

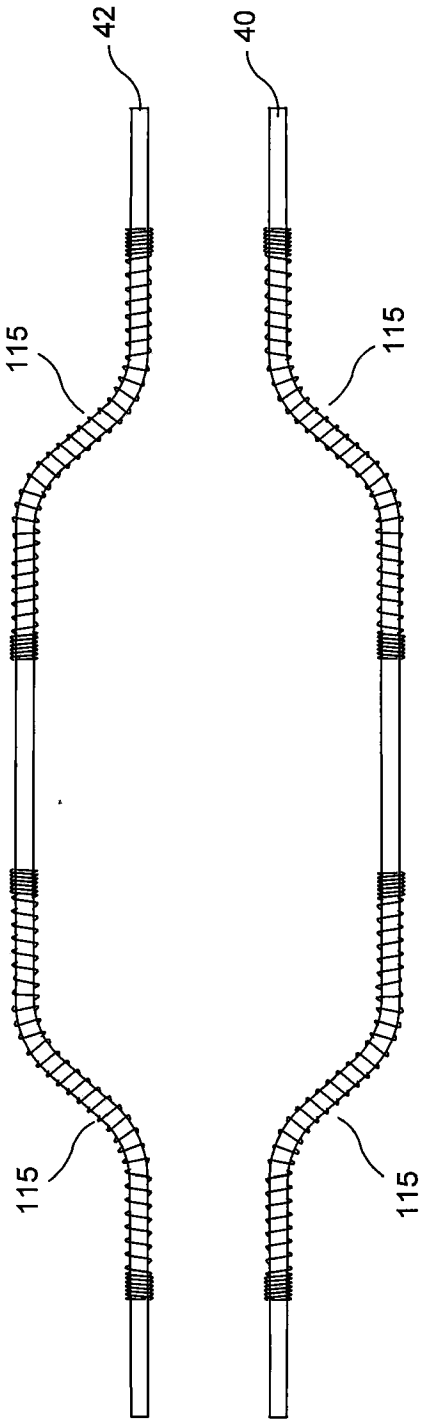

FIG. 15

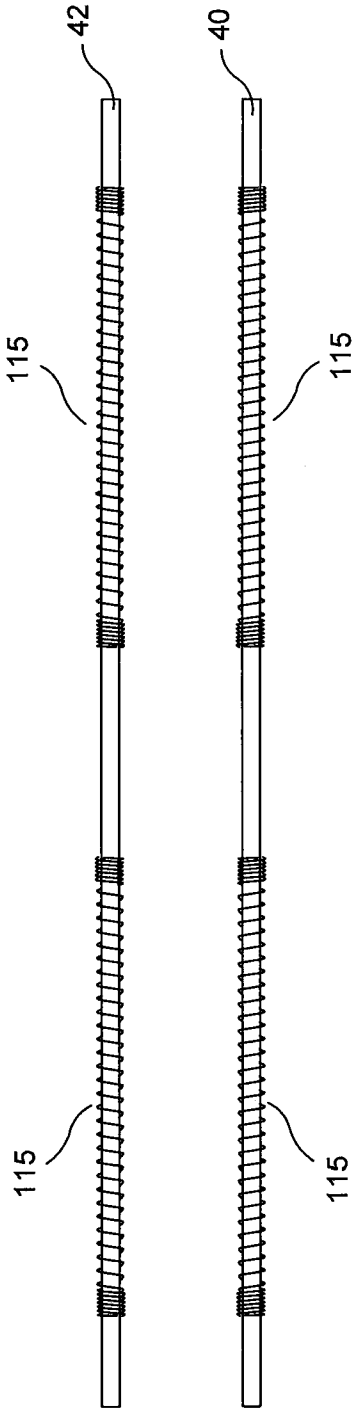

FIG. 16

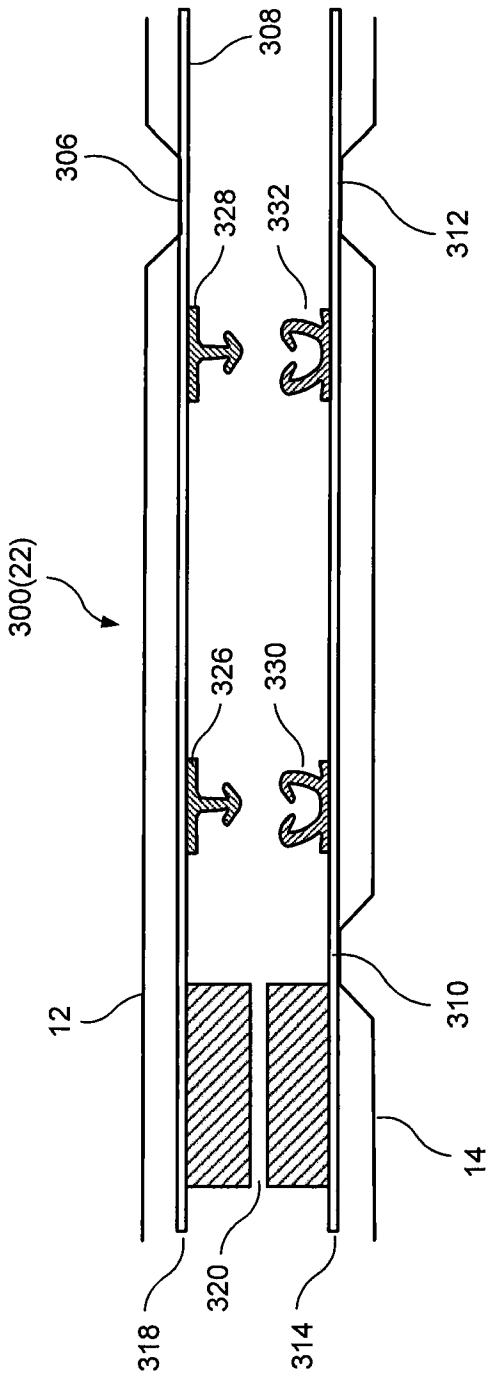

FIG. 17

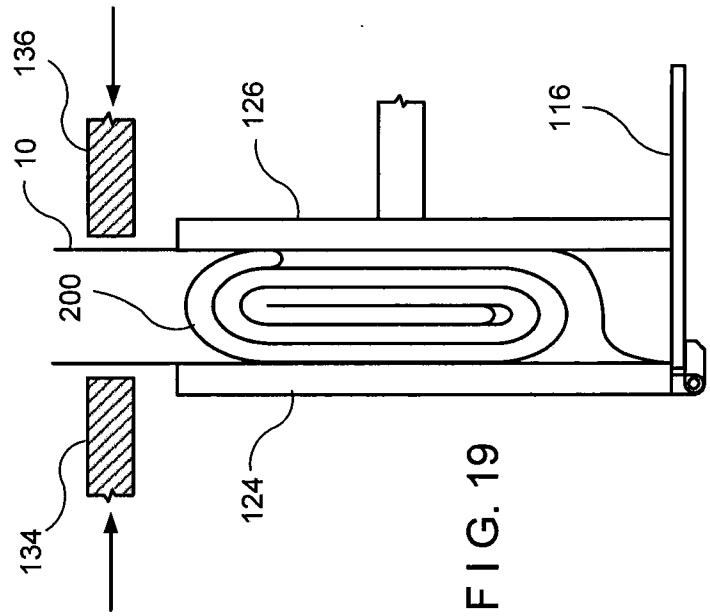

FIG. 19

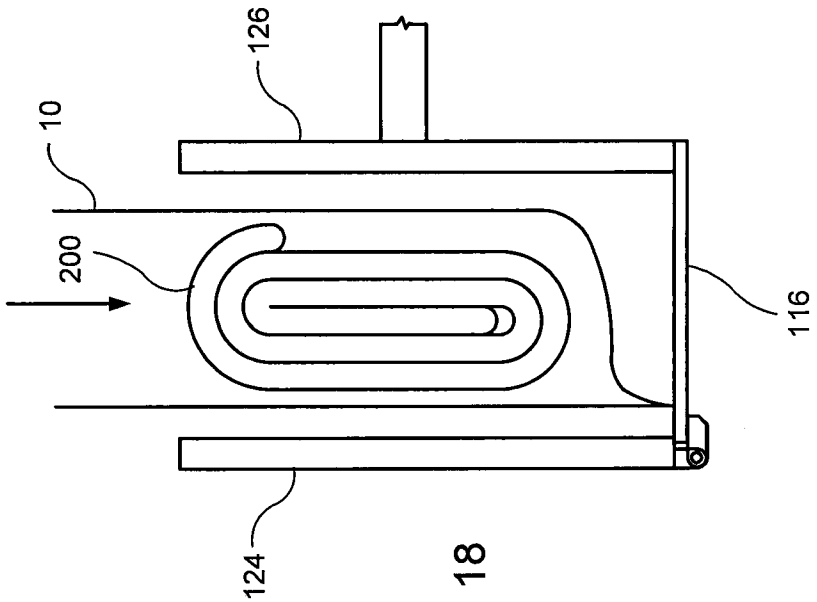

FIG. 18

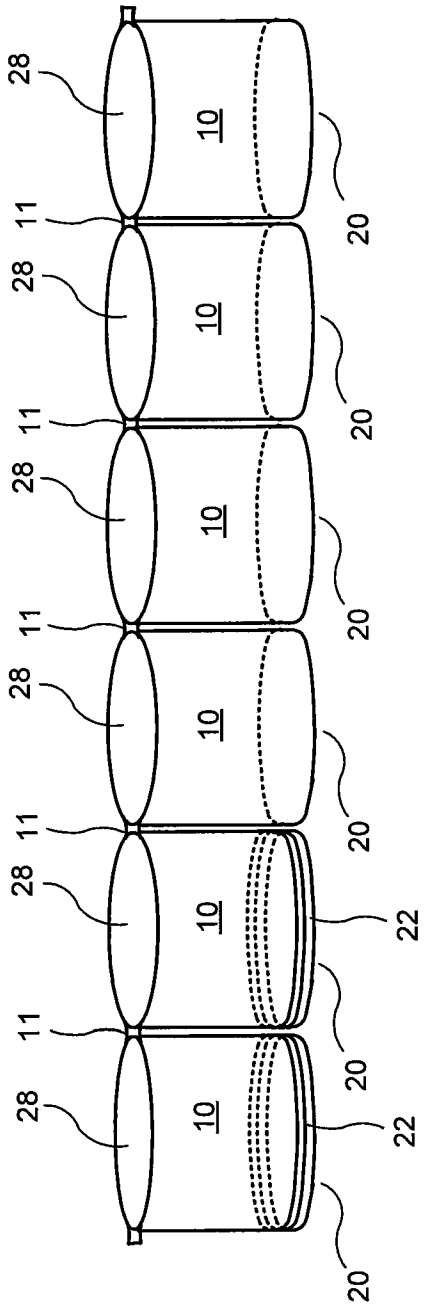

FIG. 20

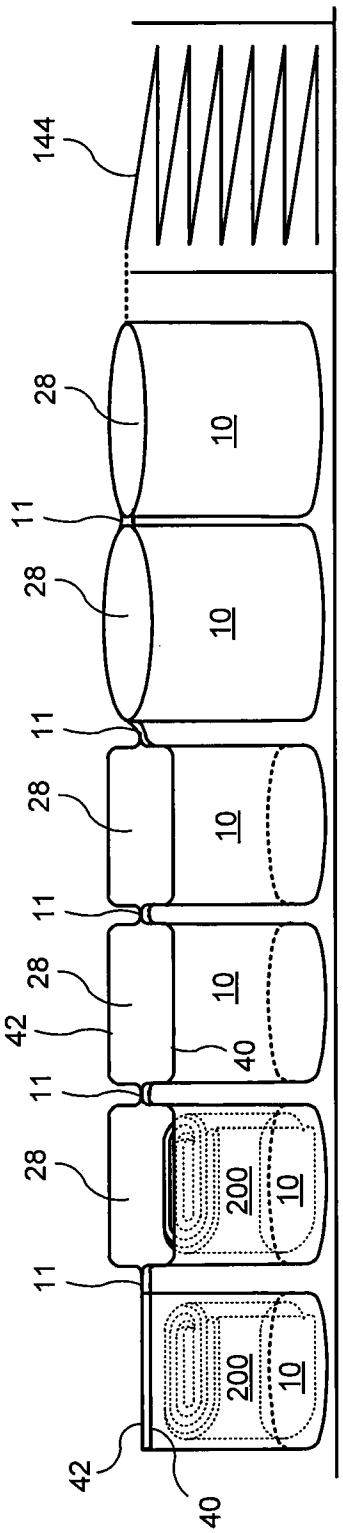

FIG. 21

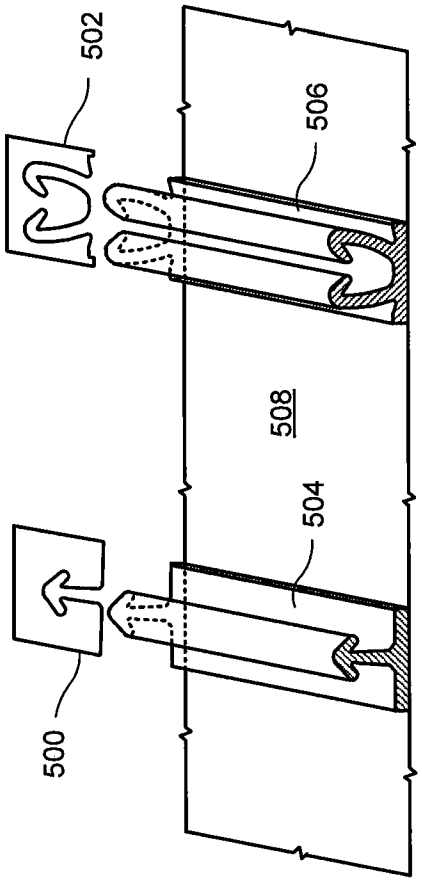

FIG. 22A

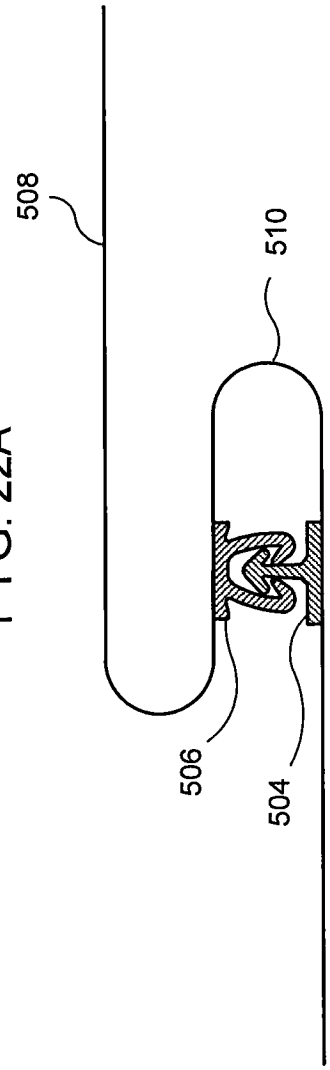

FIG. 22B

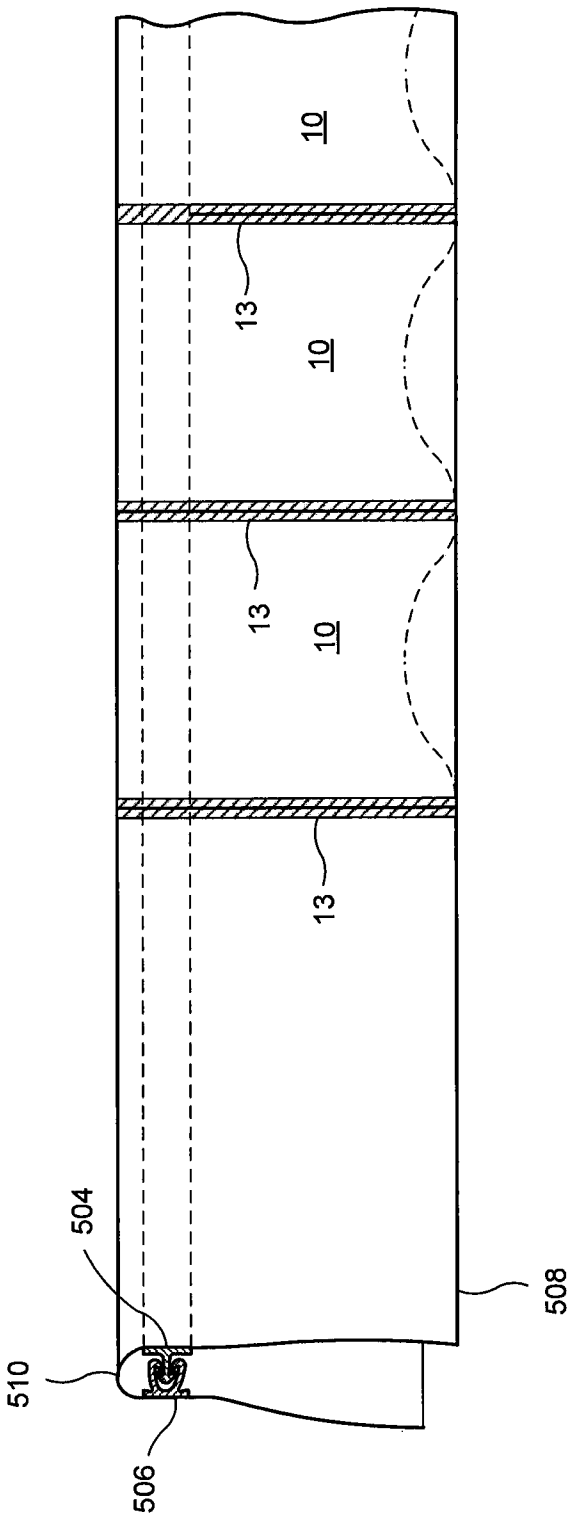

FIG. 22C

INTERNATIONAL SEARCH REPORT

International application No
PCT/US2011/059717

A. CLASSIFICATION OF SUBJECT MATTER
INV. B65B63/02 B65B61/18 B65B43/12 B65B43/14 B65D33/25
ADD.

According to International Patent Classification (IPC) or to both national classification and IPC

B. FIELDS SEARCHED

Minimum documentation searched (classification system followed by classification symbols)
B65B B65D

Documentation searched other than minimum documentation to the extent that such documents are included in the fields searched

Electronic data base consulted during the international search (name of data base and, where practical, search terms used)
EPO-Internal

C. DOCUMENTS CONSIDERED TO BE RELEVANT

Category*	Citation of document, with indication, where appropriate, of the relevant passages	Relevant to claim No.
Y A	EP 0 059 613 A1 (CELLU PROD CO [US]) 8 September 1982 (1982-09-08) page 5, line 31 - page 6, line 4 page 8, line 10 - page 9, line 24; figures 4-10	1-4,7, 9-12,14 5,6,8, 13,15-20
Y	US 2007/226903 A1 (PAUL GERALD T [US] ET AL) 4 October 2007 (2007-10-04) paragraphs [0022] - [0025]; figures 5,6	1-4,7
Y	US 6 357 210 B1 (WETTER BRUNO [CA]) 19 March 2002 (2002-03-19) column 2, line 57 - column 4, line 38; figures 3a,3b,3c,4	1,4, 9-12,14
A	US 2008/296182 A1 (DILIBERTO SAMUEL L [US]) 4 December 2008 (2008-12-04) paragraphs [0083] - [0085]; figures 3-6	5,6

-/--

[X] Further documents are listed in the continuation of Box C.

[X] See patent family annex.

* Special categories of cited documents :

"A" document defining the general state of the art which is not considered to be of particular relevance

"E" earlier document but published on or after the international filing date

"L" document which may throw doubts on priority claim(s) or which is cited to establish the publication date of another citation or other special reason (as specified)

"O" document referring to an oral disclosure, use, exhibition or other means

"P" document published prior to the international filing date but later than the priority date claimed

"T" later document published after the international filing date or priority date and not in conflict with the application but cited to understand the principle or theory underlying the invention

"X" document of particular relevance; the claimed invention cannot be considered novel or cannot be considered to involve an inventive step when the document is taken alone

"Y" document of particular relevance; the claimed invention cannot be considered to involve an inventive step when the document is combined with one or more other such documents, such combination being obvious to a person skilled in the art.

"&" document member of the same patent family

Date of the actual completion of the international search	Date of mailing of the international search report
17 April 2012	26/04/2012

Name and mailing address of the ISA/	Authorized officer
European Patent Office, P.B. 5818 Patentlaan 2 NL - 2280 HV Rijswijk Tel. (+31-70) 340-2040, Fax: (+31-70) 340-3016	Kulhanek, Peter

INTERNATIONAL SEARCH REPORT

International application No
PCT/US2011/059717

C(Continuation). DOCUMENTS CONSIDERED TO BE RELEVANT

Category*	Citation of document, with indication, where appropriate, of the relevant passages	Relevant to claim No.
A	US 2009/257686 A1 (ANZINI DAVID J [US]) 15 October 2009 (2009-10-15) paragraphs [0013], [0014]; figures 1,2	7,8
A	US 5 188 461 A (SORENSEN LEIF B [US]) 23 February 1993 (1993-02-23) column 4, line 10 - column 5, line 21; figures 1,3	13
A	US 5 704 192 A (JOSTLER JAN [SE] ET AL) 6 January 1998 (1998-01-06) column 1, line 66 - column 2, line 26 column 4, lines 11-34 column 5, lines 36-58; figures 1,2,7a,7b	15-20

INTERNATIONAL SEARCH REPORT

Information on patent family members

International application No
PCT/US2011/059717

Patent document cited in search report	Publication date	Patent family member(s)	Publication date
EP 0059613 A1	08-09-1982	CA 1199569 A1	21-01-1986
		EP 0059613 A1	08-09-1982
US 2007226903 A1	04-10-2007	NONE	
US 6357210 B1	19-03-2002	GB 2376010 A	04-12-2002
		US 6357210 B1	19-03-2002
US 2008296182 A1	04-12-2008	NONE	
US 2009257686 A1	15-10-2009	CN 102046484 A	04-05-2011
		EP 2268553 A1	05-01-2011
		US 2009257686 A1	15-10-2009
		WO 2009128994 A1	22-10-2009
US 5188461 A	23-02-1993	NONE	
US 5704192 A	06-01-1998	AU 6662594 A	21-11-1994
		CA 2162143 A1	10-11-1994
		DE 69414101 D1	26-11-1998
		DE 69414101 T2	11-03-1999
		EP 0696988 A1	21-02-1996
		SE 501543 C2	13-03-1995
		SE 9301547 A	06-11-1994
		US 5704192 A	06-01-1998
		WO 9425348 A1	10-11-1994