AU9519008

(12) PATENT ABRIDGMENT (11) Document No. AU-B-19008/95
(19) AUSTRALIAN PATENT OFFICE (10) Acceptance No. 689556

(54) Title
INVALID HOIST

(51)[6] International Patent Classification(s)
A61G 007/10

(21) Application No. : **19008/95** (22) Application Date : **20.03.95**

(87) PCT Publication Number : **WO95/30400**

(30) Priority Data

(31) Number	(32) Date	(33) Country
9409211	10.05.94	GB UNITED KINGDOM
9501629	27.01.95	GB UNITED KINGDOM

(43) Publication Date : **29.11.95**

(44) Publication Date of Accepted Application : **02.04.98**

(71) Applicant(s)
ARJO LIMITED

(72) Inventor(s)
ROBERT DUNN; MICHAEL GEORGE GILL; JOHN GREAVES; RICHARD IAN LEES; BRUCE EDWARD SOMERTON

(74) Attorney or Agent
SPRUSON & FERGUSON , GPO Box 3898, SYDNEY NSW 2001

(56) Prior Art Documents
EP 506245

(57) Claim

1. An invalid hoist comprising a mobile chassis, a lifting column upstanding from the chassis and a lifting arm supported by the lifting column, wherein the chassis comprises a transversely extending portion from which the lifting column upstands and two side members which are pivotable between a first operative position in which they project forwardly from the transversely extending portion and a second storage position in which they extend parallel or substantially parallel to the lifting column and which are also pivotable between a position in which they extend parallel or substantially parallel to one another and a position in which they diverge towards their forward ends,

.../2

wherein the rear ends of the side members and two wheels or castors provided on the transversely extending chassis portion support the hoist in a stable upright position when the side members are in said second storage position.

OPI DATE 29/11/95 APPLN. ID 19008/95
AOJP DATE 11/01/96 PCT NUMBER PCT/GB95/00606

AU9519008

(51) International Patent Classification 6 :
A61G 7/10

A1

(11) International Publication Number: WO 95/30400

(43) International Publication Date: 16 November 1995 (16.11.95)

(21) International Application Number: PCT/GB95/00606

(22) International Filing Date: 20 March 1995 (20.03.95)

(30) Priority Data:

9409211.1	10 May 1994 (10.05.94)	GB
9501629.1	27 January 1995 (27.01.95)	GB

(71) Applicant *(for all designated States except US)*: ARJO LIMITED [GB/GB]; St Catherine Street, Gloucester GL1 2SL (GB).

(72) Inventors; and

(75) Inventors/Applicants *(for US only)*: DUNN, Robert [GB/GB]; 187 Alstone Lane, Cheltenham, Gloucester GL51 8JA (GB). GILL, Michael, George [GB/GB]; 10 Honeysuckle Close, West Winds, Prestbury, Cheltenham, Gloucestershire GL52 5LN (GB). GREAVES, John [GB/GB]; 52 Cherville Street, Romsey, Hampshire SO51 8FD (GB). LEES, Richard, Ian [GB/GB]; 3 Box Road Avenue, Cam, Dursley, Gloucestershire GL11 5DN (GB). SOMERTON, Bruce, Edward [GB/GB]; 4 Mandalay Drive, Norton, Gloucestershire GL2 9LD (GB).

(74) Agent: A.R. DAVIES & CO.; 27 Imperial Square, Cheltenham, Gloucestershire GL50 1RQ (GB).

(81) Designated States: AM, AT, AU, BB, BG, BR, BY, CA, CH, CN, CZ, DE, DK, EE, ES, FI, GB, GE, HU, JP, KE, KG, KP, KR, KZ, LK, LR, LT, LU, LV, MD, MG, MN, MW, MX, NL, NO, NZ, PL, PT, RO, RU, SD, SE, SG, SI, SK, TJ, TM, TT, UA, UG, US, UZ, VN, European patent (AT, BE, CH, DE, DK, ES, FR, GB, GR, IE, IT, LU, MC, NL, PT, SE), OAPI patent (BF, BJ, CF, CG, CI, CM, GA, GN, ML, MR, NE, SN, TD, TG), ARIPO patent (KE, MW, SD, SZ, UG).

Published
With international search report.

689556

(54) Title: INVALID HOIST

(57) Abstract

The invalid hoist comprises a mobile chassis (10), a lifting column (11) upstanding from the chassis and a lifting arm (12) supported by the lifting column. The chassis comprises a main portion (13) extending transversely of the hoist and two side members (14) which are movable between a first in use position in which they project forwardly from the main portion and a second storage position (as shown) in which they extend parallel or substantially parallel to the lifting column. Releasable means (22) may be provided for holding the lifting arm in an operative position and for releasing the lifting arm to allow it to pivot into a storage position alongside the lifting column. Alternatively an extensible, retractable device (see figure 5) may be connected between the lifting arm and the lifting column at positions remote from the pivot axis between the lifting arm and the lifting column so that the lifting arm can be moved between an operative position and a storage position alongside the lifting column.

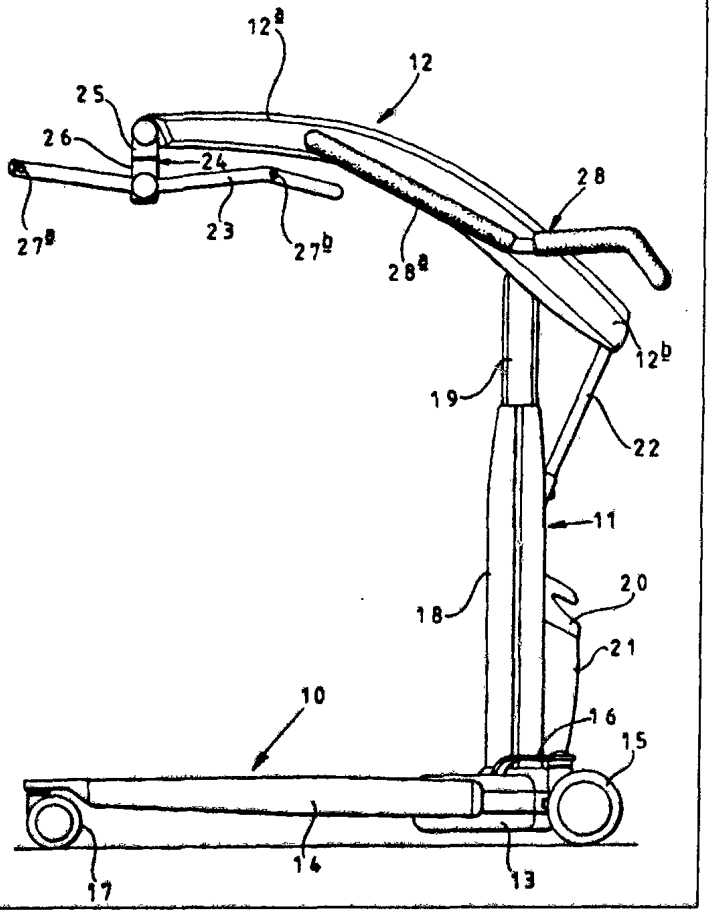

INVALID HOIST

This invention relates to an invalid hoist and more particularly to an invalid hoist which is intended primarily, but not exclusively, for domestic use.

According to the present invention, there is provided an invalid hoist comprising a mobile chassis, a lifting column upstanding from the chassis and a lifting arm supported by the lifting column, wherein the chassis comprises a transversely extending portion from which the lifting column upstands and two side members which are pivotable between a first operative position in which they project forwardly from the transversely extending portion and a second storage position in which they extend parallel or substantially parallel to the lifting column and which are also pivotable between a position in which they extend parallel or substantially parallel to one another and a position in which they diverge towards their forward ends, wherein the rear ends of the side members and two wheels or castors provided on the transversely extending chassis portion support the hoist in a stable upright position when the side members are in said second storage position.

Preferably, the hoist includes four wheels or castors, two on the transversely extending portion and one on each of the side members.



Preferably, the lifting arm is pivotably connected

to the lifting column. In this case, releasable means may be provided for holding the lifting arm in an operative position and for releasing the lifting arm to allow it to pivot into a storage position alongside the lifting column. Alternatively, an extendible/retractable stay could be connected between the lifting arm and the lifting column at positions remote from the pivot axis between the lifting arm and the lifting column so that the lifting arm can be moved between an operative position and a storage position alongside the lifting column. In this latter case, the stay may include two threaded members which are rotatable relative to one another to extend and retract the stay.

Preferably, the lifting column is in the form of a telescopic mast having a lower part fixed to the transversely extending chassis portion and an upper part which can be raised or lowered relative to the lower part. In this case, the lifting arm is, preferably, pivotably connected to the upper part of the mast and has a first limb extending forwardly of the mast and a second limb extending rearwardly of the mast, the second limb being connected by a tie rod to the lower mast part so that as the mast is extended and retracted the lifting arm pivots upwards and downwards, respectively. In this case, the aforesaid releasable means could be provided between the tie rod and the lower mast part or the lifting arm or the tie rod could be in the form of an extendible/retractable stay as aforesaid. Also, in this case, the mast may be in

TRALIAN PATENT OFFICE

the form of a telescopic actuator powered by a rechargeable battery.

Preferably, a sling hanger is supported by the free end of the lifting arm. In this case, the sling hanger is, preferably, pivotable about a horizontal axis and has two spaced sling attachment points one side of the axis and at least one sling attachment point on the other side of the horizontal axis.

Preferably, a handle is provided on the lifting arm for allowing an operator to move the hoist along a floor surface. In this case, preferably, the handle extends at least part way along each of two opposite sides of the lifting arm and has a transverse portion adjacent to the rear end of the lifting arm.

The invention will now be more particularly described, by way of example, with reference to the accompanying drawings in which:

Figure 1 is a side view of a first embodiment of an invalid hoist according to the invention, the hoist being shown in an in use condition,

Figure 2 is a plan view of the hoist shown in Figure 1,

AUSTRALIAN PATENT OFFICE

Figure 3 is a perspective view of the hoist shown in Figures 1 and 2 but shown in a collapsed storage condition,

Figure 4 is a sectional view through the mast and showing the chassis of the hoist with the cover removed, and

Figure 5 is a fragmentary side view, partly in section, showing a modification to the hoist shown in Figure 1.

Referring firstly to Figures 1 to 4 of the drawings, the invalid hoist shown therein comprises a mobile chassis 10, a lifting column 11 upstanding from the chassis 10 and a lifting arm 12 supported by the lifting column 11.

As shown in figure 4, the chassis 10 comprises a portion 9 extending transversely of the hoist and two side members 14. The side members 14 are pivotable relative to the transversely extending chassis portion 9 in respective vertical planes between a first in use position (as shown in Figures 1,2 and 4) in which they project forwardly from the transversely extending portion 9 and a second storage position (as shown in Figure 3) in which they extend parallel or substantially parallel to the lifting column 11 and in which they lie in a common vertical plane offset slightly from the lifting column 11. The side members 14 are also pivotable relative to the transversely extending

AUSTRALIAN PATENT OFFICE

chassis portion 9 (when in an in use position) in a common horizontal plane to increase the width of the front opening of the chassis to fit around, for example, a wheelchair. To achieve this, connecting arms 56 are provided between the transversely extending chassis portion 9 and the side members 14. The connecting arms 56 are pivotably connecting to opposite ends of the transversely extending chassis portion 9 for pivotable movement about respective vertical axes 54 and the side members 14 are pivotably connected to respective connecting arms 56 for pivotable movement relative thereto about respective horizontal axes 50. A mechanism 55 is provided for pivoting the connecting arms 56 relative to the transversely extending chassis portion 9 so as to open and close the side members 14 and releasable fastening means are provided between the side members 14 and respective connecting arms 56 to retain the side members in an in use position. The releasable fastening means may take the form of bolts 51 slidably mounted in holders 52 mounted on the side members 14 and sockets 53 supported by the connecting arms 56.

The transversely extending chassis portion 9 and the connecting arms 56 are enclosed in a cover 13 to improve the aesthetic appearance of the hoist.

The transversely extending chassis portion 9 is provided with two wheels or castors 15 supported by brackets 16 and each side member 14 is provided with a

single wheel or castor 17 provided at or adjacent to its front end.

The side members 14 each project rearwardly of the axis 50 about which they are pivotably connected to the connecting arms 56 (as considered in an in use position) to such an extent that when they are in the second storage position the rear ends of the side members 14 and the two wheels or castors 15 provided on the transversely extending chassis portion 13 together support the hoist in a stable upright position (as shown in Figure 3).

The lifting column 11 is in the form of a telescopic actuator which itself forms a mast having a lower part 18 which is secured to the transversely extending chassis portion 9 and an upper part 19. The telescopic actuator 11 is powered by a rechargeable battery 20 mounted in a compartment 21 at the rear of the actuator.

The lifting arm 12 is pivotably connected to the upper end of the upper actuator part 19 and has a first limb 12a extending forwardly of the actuator and a second relatively shorter limb 12b extending rearwardly of the actuator. The rear end of the limb 12b is connected by a tie rod 22 to the lower actuator part 18 so that when the actuator 11 is extended, the lifting arm 12 will pivot upwards and, when the actuator is retracted, the lifting arm 12 will pivot downwards.

AUSTRALIAN PATENT OFFICE

The tie rod 22 is pivotably connected to the rear end of the limb 12b of the lifting arm and is pivotably connected to the lower actuator part 18 by releasable fastening means 29 so that the lifting arm 12 can be released to allow it to pivot into a storage position alongside the mast 11 (as shown in Figure 3).

A sling hanger 23 is connected to the front end of the lifting arm 12 by a sling hanger support 24. The support 24 comprises two parts 25 and 26 rotatable relative to one another about a vertical or substantially vertical axis. The part 25 is pivotably connected to the lifting arm about a first horizontal axis and the sling hanger 23 is pivotably connected to the second part 26 about a second horizontal axis.

The sling hanger 23 has two widely spaced sling attachment points 27a on one side of the second horizontal axis and two more closely spaced sling attachment points 27b on the other side of the second horizontal axis. A single body support sling can then be attached to the sling attachment points 27a, 27b to support a patient. The two sling attachment points 27b could be replaced by a single attachment point.

A handle 28 is provided on the lifting arm to allow an operator to move the hoist along a floor surface. The handle 28 has two side limbs 28a and 28b which extend along

STRALIAN NT OFFICE

each of two opposite sides of the lifting arm 12 and a transverse portion 28c adjacent to the rear end of the lifting arm 12. This allows the operator to manoeuvre the hoist from either side or from the rear of the hoist.

Figure 5 shows a modification to the embodiment described above. In this case, the tie rod 22 is in the form of an extendible/retractable stay 30 which comprises an externally threaded spindle 31 and an internally threaded nut 32. The spindle 31 is mounted for rotation in a bush 33 welded to the web 34 of a U-shaped bracket 35 which is pivotably connected adjacent to the free ends of its two arms 36 to the rear end of the lifting arm 12. A sleeve 37 is connected to the spindle 31 by a collar 38 so that the sleeve 37 surrounds the spindle 31 and an annular space is provided between the spindle 31 and the sleeve 37.

The nut 32 is secured to a further sleeve 39 which is secured to the web 40 of a further U-shaped bracket 41 pivotably connected adjacent to the free ends of its two arms 42 to a lug 43 clamped to the lower actuator part 18. The nut 32 and further sleeve 39 are located in the annular space between the spindle 31 and the sleeve 37 and the nut 32 co-operates with the spindle 31.

The spindle 31 can be rotated relative to the nut 32 to extend or retract the stay 30 by rotating the sleeve 38. This will allow the lifting arm 12 to be moved between its

STRALIAN NT OFFICE

operative position (shown in Figures 1 & 2) and its storage position (shown in Figure 3) alongside the mast.

This arrangement has the advantage over the use of the releasable tie bar 22 in that it provides controlled movement of the lifting arm 12 and thus prevents rapid movement of the lifting arm 12 to its storage position with the associated risk of harming an operator.

The above embodiment are given by way of example only and various modifications will be apparent to persons skilled in the art without departing from the scope of the invention. For example, the tie rod 22 could be releasably connected to the lifting arm 12 instead of being releasably connected to the lower actuator part 18. Also, the actuator could be provided within an outer telescopic housing instead of defining the mast by itself.

AUSTRALIAN PATENT OFFICE

The claims defining the invention are as follows:

1. An invalid hoist comprising a mobile chassis, a lifting column upstanding from the chassis and a lifting arm supported by the lifting column, wherein the chassis comprises a transversely extending portion from which the lifting column upstands and two side members which are pivotable between a first operative position in which they project forwardly from the transversely extending portion and a second storage position in which they extend parallel or substantially parallel to the lifting column and which are also pivotable between a position in which they extend parallel or substantially parallel to one another and a position in which they diverge towards their forward ends, wherein the rear ends of the side members and two wheels or castors provided on the transversely extending chassis portion support the hoist in a stable upright position when the side members are in said second storage position.

2. An invalid hoist as claimed in claim 1, wherein the hoist includes four wheels or castors, two on the transversely extending chassis portion and one on each of the side members.

3. An invalid hoist as claimed in claim 1 or claim 2, wherein the lifting arm is pivotably connected to the lifting column.

AUSTRALIAN PATENT OFFICE

4. An invalid hoist as claimed in claim 3, wherein releasable means are provided for holding the lifting arm in an operative position and for releasing the lifting arm to allow it to pivot into a storage position alongside the lifting column.

5. An invalid hoist as claimed in claim 3, wherein an extendable/retractable stay is connected between the lifting arm and the lifting column at positions remote from the pivot axis between the lifting arm and the lifting column so that the lifting arm can be moved between the operative position and the storage position alongside the lifting column.

6. An invalid hoist as claimed in claim 5, wherein the stay includes two threaded members which are rotatable relative to one another to extend and retract the stay.

7. An invalid hoist as claimed in any one of the preceding claims, wherein the lifting column is in the form of a telescopic mast having a lower part fixed to the transversely extending chassis portion and an upper part which can be raised or lowered relative to the lower part.

8. An invalid hoist as claimed in claim 7, wherein the lifting arm is pivotably connected to the upper part of the mast and has a first limb extending forwardly at the mast and a second limb extending rearwardly of the mast, the

AUSTRALIAN PATENT OFFICE

second limb being connected by a tie rod to the lower mast part so that as the mast is extended and retracted the lifting arm pivots upwards and downwards, respectively.

9. An invalid hoist as claimed in claim 8 when dependent on claim 4, wherein the releasable means is provided between the tie rod and the lower mast part or the lifting arm.

10. An invalid hoist as claimed in claim 8 when dependent on claim 5 or claim 6, wherein the tie rod is formed by said extendable/retractable stay.

11. An invalid hoist as claimed in any one of claims 7 - 10, wherein the mast is in the form of a telescopic actuator powered by a rechargeable battery.

12. An invalid hoist as claimed in any one of the preceding claims, wherein a sling hanger is supported by the free end of the lifting arm.

13. An invalid hoist as claimed in claim 12, wherein the sling hanger is pivotable about a horizontal axis and has two spaced sling attachment points on one side of the axis and at least one sling attachment point on the other side of the axis.

14. An invalid hoist as claimed in any one of the

AUSTRALIAN PATENT OFFICE

preceding claims, wherein a handle is provided on the lifting arm for allowing an operator to move the hoist along a floor surface.

15. An invalid hoist as claimed in claim 14, wherein the handle extends at least part way along each of two opposite sides of the lifting arm and has a transverse portion adjacent to the rear end of the lifting arm.

16. An invalid hoist substantially as hereinbefore described with reference to Figures 1 to 4 or to Figure 5 of the accompanying drawings.

Dated 20 January, 1998
Arjo Limited

Patent Attorneys for the Applicant/Nominated Person
SPRUSON & FERGUSON

AUSTRALIAN PATENT OFFICE

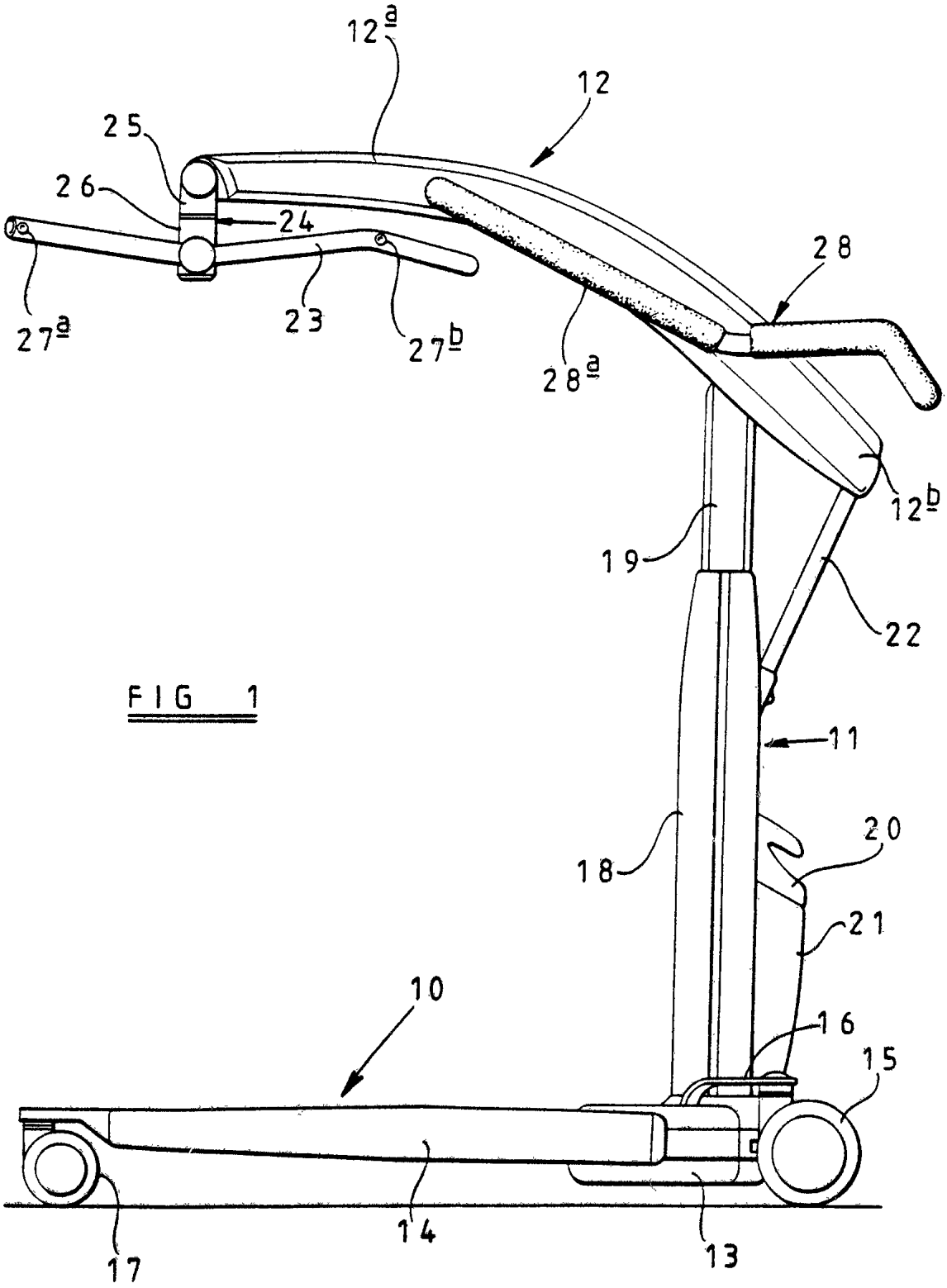
12a
12
25
26
24
28
27a
23
27b
28a
12b
19
22
11
18
20
21
10
16
15
14
17
13

FIG 1

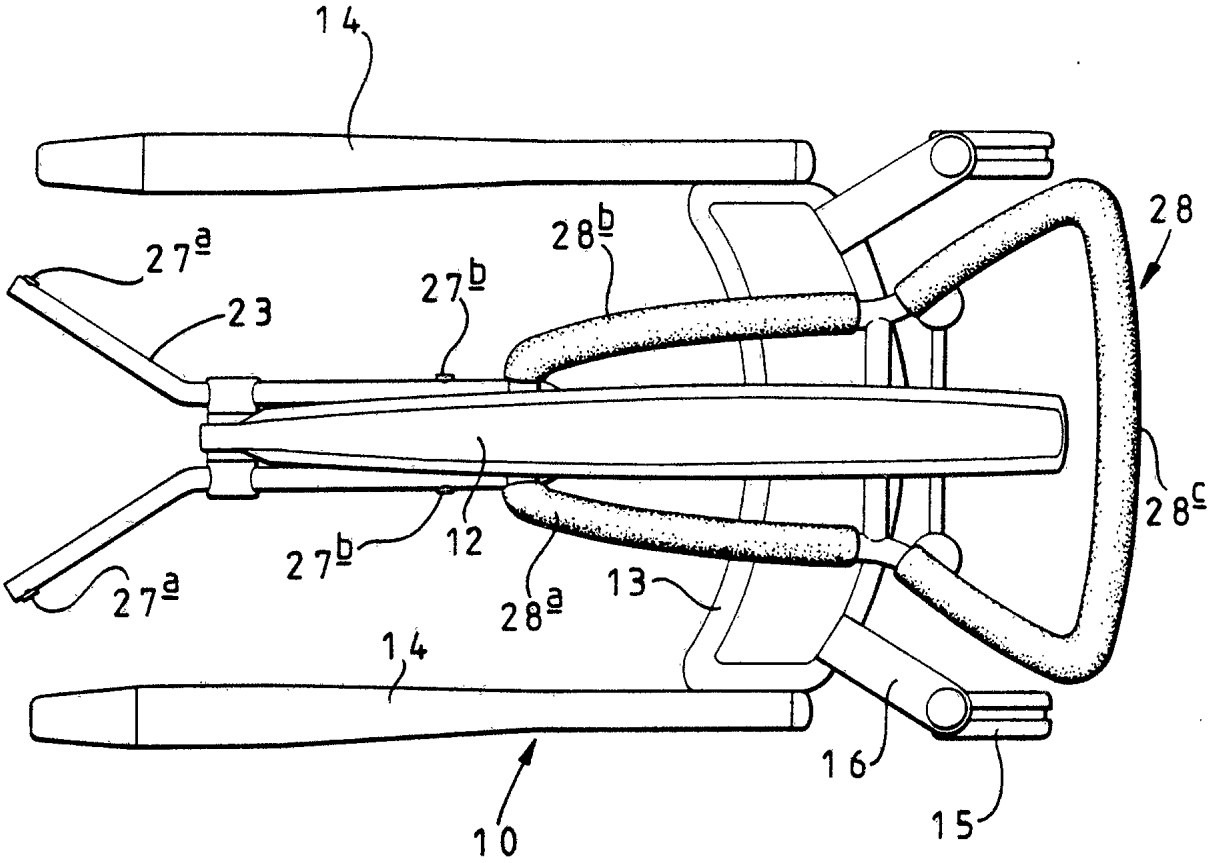

FIG 2

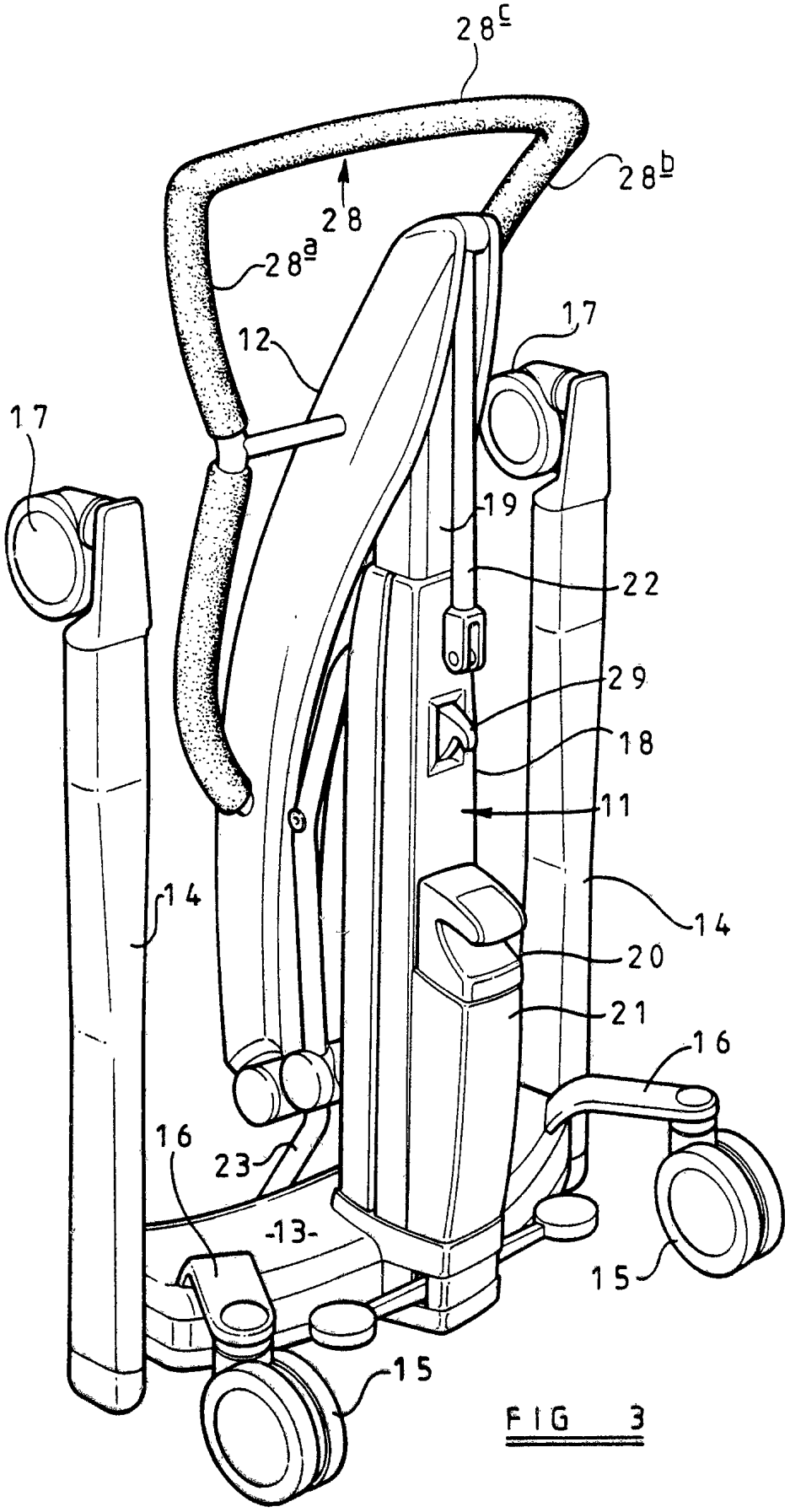

FIG 3

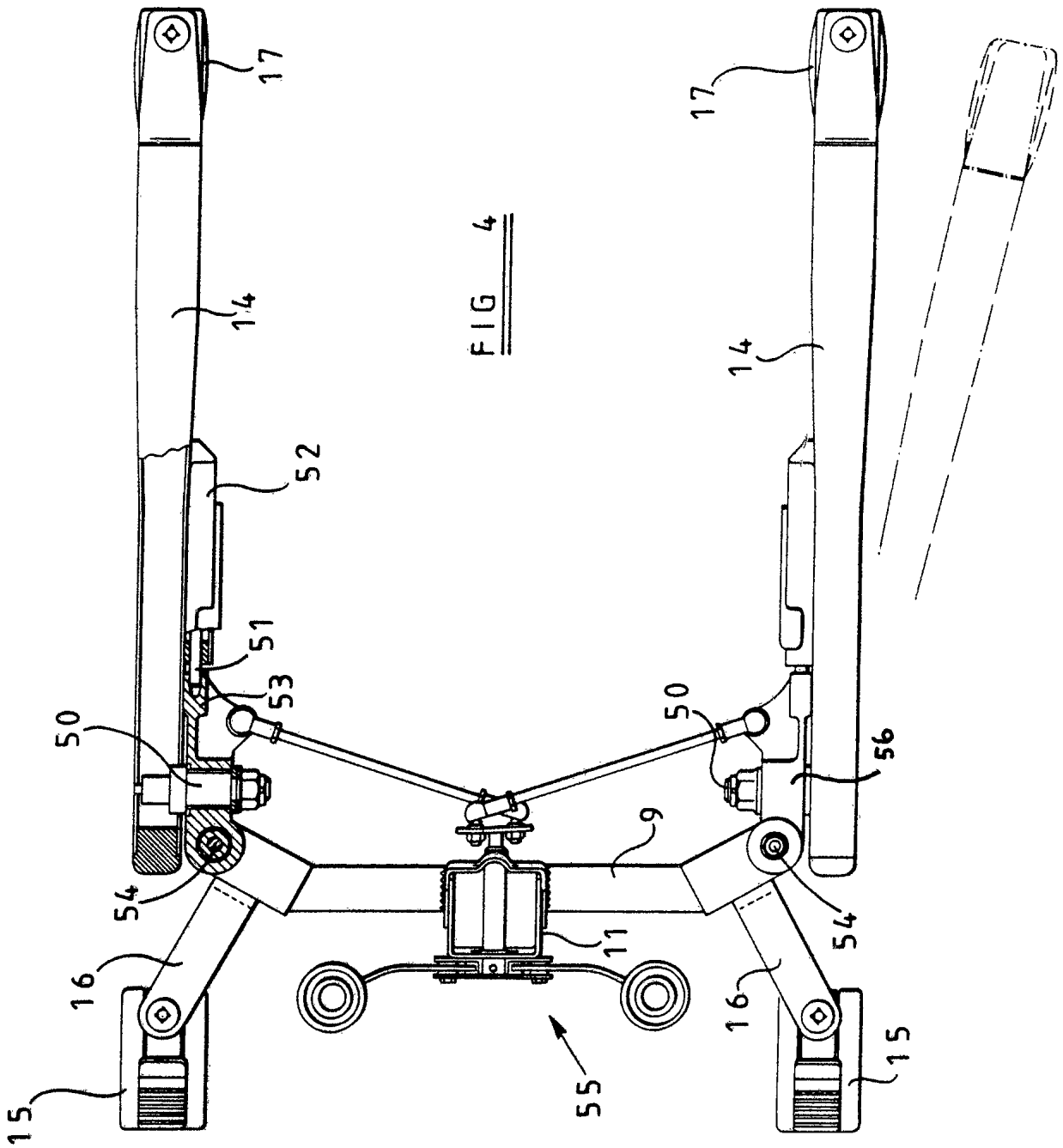

FIG 4

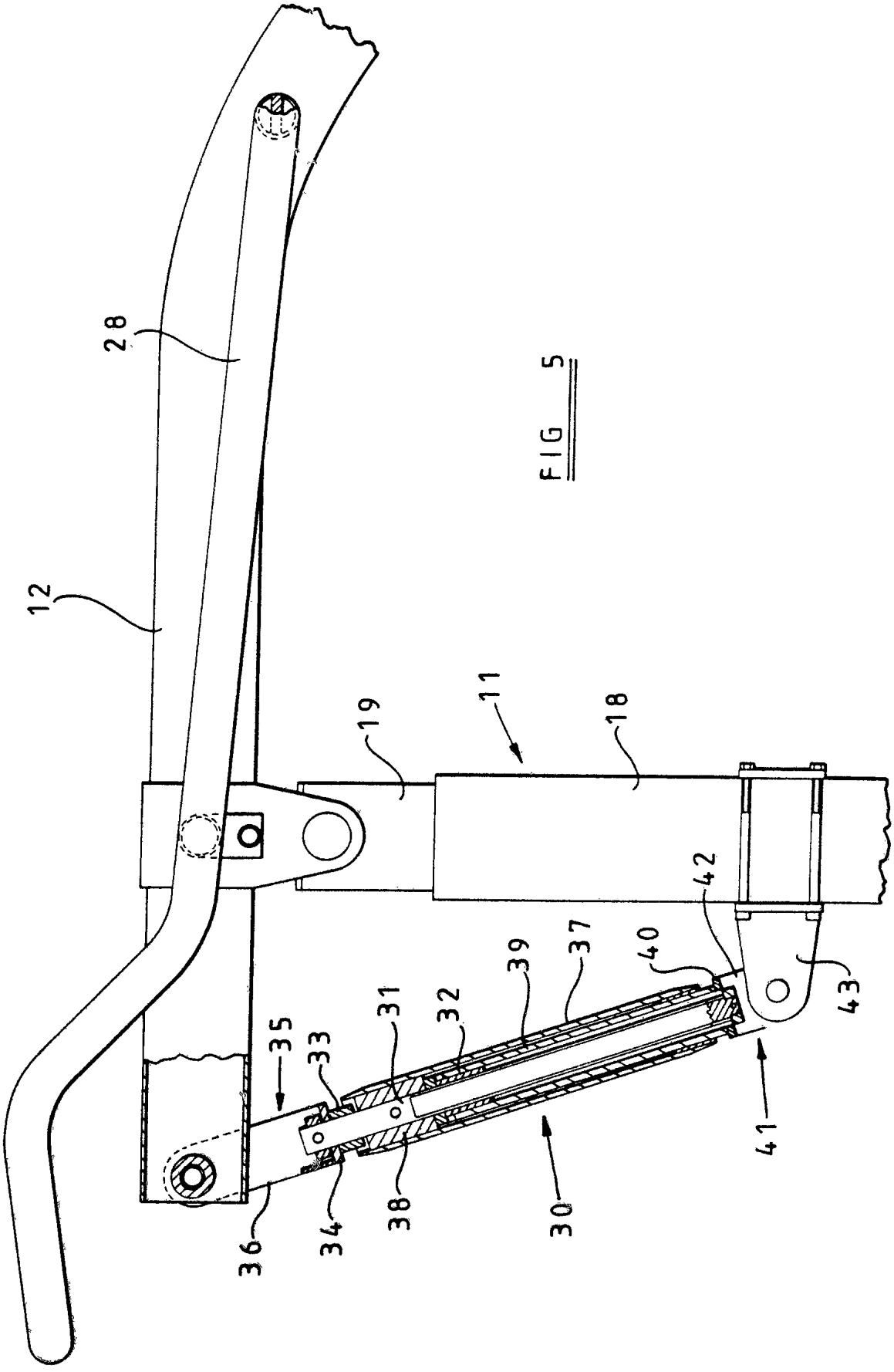

FIG 5

INTERNATIONAL SEARCH REPORT

Interna l Application No
PCT/GB 95/00606

A. CLASSIFICATION OF SUBJECT MATTER
IPC 6 A61G7/10

According to International Patent Classification (IPC) or to both national classification and IPC

B. FIELDS SEARCHED

Minimum documentation searched (classification system followed by classification symbols)
IPC 6 A61G

Documentation searched other than minimum documentation to the extent that such documents are included in the fields searched

Electronic data base consulted during the international search (name of data base and, where practical, search terms used)

C. DOCUMENTS CONSIDERED TO BE RELEVANT

Category *	Citation of document, with indication, where appropriate, of the relevant passages	Relevant to claim No.
X	US,A,3 711 877 (AVERILL) 23 January 1973 see column 2, line 64 - column 3, line 1; figure 1	1,13-15
X Y	US,A,4 682 377 (REICH) 28 July 1987 see column 2, line 58 - line 63; figures 2,4	1,4,5,15 3,6-9, 12,16,17
Y	CH,A,338 272 (HESS) 30 June 1959 see figures	3
Y	GB,A,2 222 814 (WORSNOP) 21 March 1990 see page 2, line 25 - page 3, line 5; figure	6-9,12
Y A	EP,A,0 241 096 (GULDMANN) 14 October 1987 see column 4, line 21 - line 32; figures	16 18

-/--

[X] Further documents are listed in the continuation of box C.

[X] Patent family members are listed in annex.

* Special categories of cited documents :

"A" document defining the general state of the art which is not considered to be of particular relevance

"E" earlier document but published on or after the international filing date

"L" document which may throw doubts on priority claim(s) or which is cited to establish the publication date of another citation or other special reason (as specified)

"O" document referring to an oral disclosure, use, exhibition or other means

"P" document published prior to the international filing date but later than the priority date claimed

"T" later document published after the international filing date or priority date and not in conflict with the application but cited to understand the principle or theory underlying the invention

"X" document of particular relevance; the claimed invention cannot be considered novel or cannot be considered to involve an inventive step when the document is taken alone

"Y" document of particular relevance; the claimed invention cannot be considered to involve an inventive step when the document is combined with one or more other such documents, such combination being obvious to a person skilled in the art.

"&" document member of the same patent family

Date of the actual completion of the international search	Date of mailing of the international search report
22 June 1995	03.07.95

Name and mailing address of the ISA	Authorized officer
European Patent Office, P.B. 5818 Patentlaan 2 NL - 2280 HV Rijswijk Tel. (+ 31-70) 340-2040, Tx. 31 651 epo nl, Fax: (+ 31-70) 340-3016	Godot, T

Form PCT/ISA/210 (second sheet) (July 1992)

INTERNATIONAL SEARCH REPORT

Interna l Application No
PCT/GB 95/00606

C.(Conunuation) DOCUMENTS CONSIDERED TO BE RELEVANT

Category *	Citation of document, with indicaUon, where appropriate, of the relevant passages	Relevant to claim No.
Y	GB,A,2 105 677 (BAER) 30 March 1983 see page 2, line 87 - line 89; figures	17
X	DE,A,42 09 233 (HORCHER GMBH & CO. KG) 23 September 1993 see abstract; figure 1	19
X	EP,A,0 506 245 (NESBIT EVANS HEALTHCARE LIMITED) 30 September 1992 see abstract; figures	19
P,X	GB,A,2 281 062 (NOTTINGHAM GROUP LIMITED) 22 February 1995 see abstract; figures	19

Form PCT/ISA/210 (continuation of second sheet) (July 1992)

INTERNATIONAL SEARCH REPORT

Information on patent family members

Interna... Application No
PCT/GB 95/00606

Patent document cited in search report	Publication date	Patent family member(s)		Publication date
US-A-3711877	23-01-73	NONE		
US-A-4682377	28-07-87	NONE		
CH-A-338272		NONE		
GB-A-2222814	21-03-90	NONE		
EP-A-0241096	14-10-87	NONE		
GB-A-2105677	30-03-83	US-A- CA-A-	4443902 1176199	24-04-84 16-10-84
DE-A-4209233	23-09-93	NONE		
EP-A-0506245	30-09-92	GB-A,B	2255960	25-11-92
GB-A-2281062	22-02-95	NONE		