(12) INTERNATIONAL APPLICATION PUBLISHED UNDER THE PATENT COOPERATION TREATY (PCT)

(19) World Intellectual Property Organization
International Bureau

(43) International Publication Date
21 September 2017 (21.09.2017)

WIPO | PCT

(10) International Publication Number
WO 2017/157663 A1

(51) International Patent Classification:
H04L 1/08 (2006.01) *H04L 1/00* (2006.01)

(21) International Application Number:
PCT/EP2017/054765

(22) International Filing Date:
1 March 2017 (01.03.2017)

(25) Filing Language: English

(26) Publication Language: English

(30) Priority Data:
16160878.1 17 March 2016 (17.03.2016) EP

(71) Applicant: **R3 - RELIABLE REALTIME RADIO COMMUNICATIONS GMBH** [DE/DE]; Danckelmannstraße 18, 14059 Berlin (DE).

(72) Inventors: **BONANATI, Florian**; Buchholzer Straße 2, 10437 Berlin (DE). **BOHGE, Mathias**; Danckelmannstraße 18, 14059 Berlin (DE). **GROSS, James**; Rådmansgatan 8, 11425 Stockholm (SE).

(74) Agent: **FISCHER, Uwe**; Moritzstraße 22, 13597 Berlin (DE).

(81) Designated States *(unless otherwise indicated, for every kind of national protection available)*: AE, AG, AL, AM, AO, AT, AU, AZ, BA, BB, BG, BH, BN, BR, BW, BY, BZ, CA, CH, CL, CN, CO, CR, CU, CZ, DE, DJ, DK, DM, DO, DZ, EC, EE, EG, ES, FI, GB, GD, GE, GH, GM, GT, HN, HR, HU, ID, IL, IN, IR, IS, JP, KE, KG, KH, KN, KP, KR, KW, KZ, LA, LC, LK, LR, LS, LU, LY, MA, MD, ME, MG, MK, MN, MW, MX, MY, MZ, NA, NG, NI, NO, NZ, OM, PA, PE, PG, PH, PL, PT, QA, RO, RS, RU, RW, SA, SC, SD, SE, SG, SK, SL, SM, ST, SV, SY, TH, TJ, TM, TN, TR, TT, TZ, UA, UG, US, UZ, VC, VN, ZA, ZM, ZW.

(84) Designated States *(unless otherwise indicated, for every kind of regional protection available)*: ARIPO (BW, GH, GM, KE, LR, LS, MW, MZ, NA, RW, SD, SL, ST, SZ, TZ, UG, ZM, ZW), Eurasian (AM, AZ, BY, KG, KZ, RU, TJ, TM), European (AL, AT, BE, BG, CH, CY, CZ, DE, DK, EE, ES, FI, FR, GB, GR, HR, HU, IE, IS, IT, LT, LU, LV, MC, MK, MT, NL, NO, PL, PT, RO, RS, SE, SI, SK, SM, TR), OAPI (BF, BJ, CF, CG, CI, CM, GA, GN, GQ, GW, KM, ML, MR, NE, SN, TD, TG).

Published:

— *with international search report (Art. 21(3))*

(54) Title: COMMUNICATION SYSTEM

frame	F1								F2	
slot	S1		S2		S3		S4		S1	
sub-slot	TSS1	ESS1	TSS2	ESS2	TSS3	ESS3	TSS4	ESS4	TSS1	ESS1
transmitting nodes	A	C	B	A D	C	A B	D	B C	A	C D
transmitted signal	DS1	E(DS1)	DS2	E(DS2)	DS3	E(DS3)	DS4	E(DS4)	DS5	E(DS5)

Fig. 8

(57) Abstract: An embodiment of the invention relates to a method of operating a communication system (10) that comprises at least four communication nodes (A, B, C, D). The communication system is operated in a time-division multiplexing technique wherein the communication is carried out in consecutive time frames which are divided into slots. At least one slot is allocated to each of the communication nodes. Each of the slots comprises, or preferably consists of, at least two consecutive sub-slots, hereinafter referred to as transmission sub-slot (TSS1-TSS4) and echo sub-slot (ESS1- ESS4). Echo signals (E (DS1) -E (DS4)) are transmitted during echo sub-slots (ESS1-ESS4).

WO 2017/157663 A1

Description

Communication system

The invention relates to communication systems, communication nodes and methods of operating communication systems.

Background of the invention

German Patent Application DE 10 2012 206 529 A1 discloses a method of operating a token-ring system where communication nodes send signals to allocated upstream communication nodes and receive signals from allocated downstream communication nodes.

Objective of the present invention

An objective of the present invention is to provide a method which allows operating a communication system in a very reliable way.

A further objective of the present invention is to provide a communication system and a communication node that can be operated in a very reliable way.

Brief summary of the invention

An embodiment of the invention relates to a method of operating a communication system that comprises at least four communication nodes. The system is operated in a time-division multiplexing technique wherein the communication is carried out in consecutive time frames which are divided into slots. Each of the slots comprises, or preferably consists of, at least two consecutive sub-slots, namely a transmission sub-slot and an echo sub-slot. Each of the communication nodes has its own transmission sub-slot when transmitting

data signals to other communication nodes, and transmits its data signals in its transmission sub-slot to the other communication nodes. Each of the communication nodes, or a predefined subset of the communication nodes, that has received a data signal (DS1-DS4) in the preceding transmission sub-slot (TSS1-TSS4), analyzes the data signal regarding a correct reception. In case of a correct reception, each of the communication nodes, or said predefined subset of the communication nodes, determines whether the received data signal is directed to itself (and as such meant to be processed by itself) or another communication node of the communication system. In the latter case, the communication node generates and transmits a corresponding echo signal in the consecutive echo sub-slot of the same slot, and otherwise processes the received data signal. The received data signal and the corresponding echo signal are identical, or differ at most in an identifier, preferably composed of a single bit or a single bit sequence, that identifies each signal as either a data signal or an echo signal.

An advantage of this embodiment of the invention is that the reliability of the communication is increased. By broadcasting the echo signals the echoing communication nodes augment the likelihood of a successful transmission of data to the dedicated recipient. For instance, if a communication node has not received a data signal in the transmission sub-slot for whatever reason (e. g. noise, interference), the communication node is given the opportunity to receive the information comprised by the missed data signal in the consecutive echo sub-slot by receiving the corresponding echo signal from another communication node that echoes or repeats the data transmission.

The slots may be allocated in an arbitrary fashion to the communication nodes, for instance by sending a management signal that pre-allocates the slots to the communication nodes.

In a preferred embodiment, each of the communication nodes, or said predefined subset of the communication nodes, decodes received data signals and analyzes a checksum that is included in each data signal, in order to determine whether a received data signal is error-free.

For instance, each of the communication nodes, or said predefined subset of the communication nodes, may analyze the checksum in order to determine whether detected errors have been eliminated, and in case of remaining bit errors, attempt to correct errors in order to obtain an error-free data signal.

Each of the echoing communication nodes may transmit the corresponding echo signal at the same frequency at which the preceding data signal has been received.

According to a preferred embodiment, the echoing communication nodes send their echo signals in a synchronized way, namely synchronized in the time and frequency domain with respect to the arrival time and the frequency of the previously received data signal that has to be echoed.

During receipt of a data signal in any of the transmission sub-slots of another communication node and before sending the corresponding echo signal in the consecutive echo sub-slot, each echoing communication node may start a timer and

send the corresponding echo signal upon expiration of the timer.

During receipt of a data signal in any of the transmission sub-slots of another communication node and before sending the corresponding echo signal in the consecutive echo sub-slot, each echoing communication node may identify a synchronization bit sequence contained in the data signal and synchronize the transmission of the echo signal with respect to the synchronization bit sequence, preferably by starting a timer (or said timer mentioned above) upon receipt of the synchronization bit sequence and sending the corresponding echo signal upon expiration of the timer.

All slots in each time frame preferably have the same length, and each echo sub-slot preferably has the same length as the precedent data transmission sub-slot.

The communication system may be a token ring system where each communication node directly or indirectly - i.e. via one or more other communication nodes that function as relay nodes - sends data signals to an allocated downstream communication node and receives data signals from an allocated upstream communication node.

The end and thereby the length of each transmission sub-slot as well as the length of the consecutive echo sub-slot is preferably defined by the point in time when the respective token is sent to the allocated downstream communication.

One of the communication nodes of the communication system may be a master (or may be operated as master) and the other communication nodes may be slaves (or may be operated as

slaves). Each slave preferably synchronizes its internal clock with the master's clock.

The master may send a master synchronization signal, preferably a master synchronization bit sequence, to the slaves in its transmission sub-slot. The synchronization signal may be transmitted in one or more separate synchronization time sub-slots comprised by each time frame and/or in a separate communication channel on a separate frequency.

In each of its transmission sub-slots, each of the communication nodes may transmit an information indicating from which other communication nodes data signals and/or echo signals have been received in the current or preceding time frame.

Further, in each of its transmission sub-slots, each of the communication nodes may transmit an information indicating the quality of the received signals with respect to data signals and/or echo signals that have been received from other communication nodes in the current or preceding time frame.

Summarizing, embodiments of the invention may relate to a method of operating a communication system that comprises at least four communication nodes. The system may be operated in a time-division multiplexing technique wherein the communication is carried out in consecutive time frames which are divided into slots. At least one slot is allocated to each of the communication nodes. Each of the slots comprises, or preferably consists of, at least two consecutive sub-slots, namely a transmission sub-slot and an echo sub-slot.

Each of the communication nodes transmits its data signals in the transmission sub-slot of the allocated slot. Each of the communication nodes, or a predefined subset of the communication nodes, analyzes each data signal that has been received from any other communication node in the previous transmission sub-slot, regarding a correct reception. In case of a correct reception, each of the communication nodes, or said predefined subset of the communication nodes, determines whether the received data signal is directed to itself (and as such meant to be processed by itself) or another communication node of the communication system. In the latter case, the communication node generates a corresponding echo signal in the consecutive echo sub-slot, and otherwise processes the received data signal. The data signal and the echo signal are identical, or differ at most in an identifier, preferably composed of a single bit or a single bit sequence, that identifies each signal as either a data signal or an echo signal.

A further embodiment of the invention relates to a communication system comprising at least four communication nodes. Each of the communication nodes is configured to determine - upon receipt of a data signal from another communication node - whether the received data signal is directed to itself or another communication node of the communication system and - in the latter case - to generate an echo signal that corresponds to the received data signal.

The communication node is preferably configured to determine - upon receipt of a data signal from another communication node - whether the received data signal is directed to itself or another communication node of the communication system and

- in the latter case - to generate an echo signal that corresponds to the received data signal.

The communication node may comprise a processor and a memory that stores an echo software module. The echo software module - after activation - programs the processor to determine - upon receipt of a data signal from another communication node - whether the received data signal is directed to itself or another communication node of the communication system and - in the latter case - to generate an echo signal that corresponds to the received data signal.

Brief description of the drawings

In order that the manner in which the above-recited and other advantages of the invention are obtained will be readily understood, a more particular description of the invention briefly described above will be rendered by reference to specific embodiments thereof which are illustrated in the appended drawings. Understanding that these drawings depict only typical embodiments of the invention and are therefore not to be considered to be limiting of its scope, the invention will be described and explained with additional specificity and detail by the use of the accompanying drawings in which

Figure 1 shows an exemplary embodiment of a communication system that comprises four broadcast-type communication nodes;

Fig. 2-7 show the communication system of Figure 1 in different time slots during operation in a time-division multiplexing technique;

Figure 8 illustrates the transmission sub-slots and echo sub-slots that are allocated to the communication nodes of the communication system according to Figure 1;

Figure 9 illustrates an exemplary embodiment of a communication node that can be operated in the communication system according to Figure 1;

Figure 10 shows another exemplary embodiment of a communication system that comprises four broadcast-type communication nodes;

Fig. 11-12 show the communication system of Figure 10 in different time slots during operation in a time-division multiplexing technique; and

Figure 13 illustrates the transmission sub-slots and echo sub-slots that are allocated to the communication nodes of the communication system according to Figure 10.

Detailed description of the preferred embodiments

The preferred embodiments of the present invention will be best understood by reference to the drawings. It will be readily understood that the present invention, as generally described and illustrated in the figures herein, could vary in a wide range. Thus, the following more detailed description of the exemplary embodiments of the present invention, as represented in the figures, is not intended to limit the scope of the invention, as claimed, but is merely representative of presently preferred embodiments of the invention.

Figure 1 shows an exemplary embodiment of a communication system 10 according to the present invention. The communication system 10 comprises a plurality of broadcast-type communication nodes A, B, C, and D.

The communication system 10 may form a token-ring wherein each communication node directly or indirectly - i.e. via one or more other communication nodes - sends data signals DS1-DS4 to an allocated downstream communication node and receives data signals DS1-DS4 from an allocated upstream communication node. The data signals DS1-DS4 are illustrated by arrows in Figure 1. The arrows' directions indicate the direction of the communication and thus define for each communication node which of the other communication nodes is the respective upstream node and the respective downstream node.

The communication system 10 is operated in a time-division multiplexing technique wherein the communication is carried out in consecutive time frames (see frames F1 and F2 in Figure 8) which are divided into slots (see slots S1-S4 in Figure 8).

Each of the communication nodes A, B, C, and D transmits its data signals DS1-DS4 in the transmission sub-slot TSS1-TSS4 of an allocated slot (S1-S4) as illustrated in Figure 8. Figure 8 shows that the transmission sub-slot TSS1 is allocated to communication node A, the transmission sub-slot TSS2 is allocated to communication node B, the transmission sub-slot TSS3 is allocated to communication node C, and the transmission sub-slot TSS4 is allocated to communication node D.

In order to increase the reliability of the communication system 10, the communication nodes A, B, C, and D are configured to generate echo signals. The echo signals carry the same information as the echoed data signals and therefore increase the system's redundancy. The echo signals are transmitted in echo sub-slots ESS1-ESS4 (see Figure 8). This will be explained in an exemplary fashion with reference to Figures 2-7.

Figure 2 illustrates the communication system 10 during the transmission sub-slot TSS1 of frame F1 in Figure 8. The communication node A sends a data signal DS1 to the allocated communication node B. It is assumed here in an exemplary manner that the communication node C has also received the data signal DS1 whereas the communication node D has failed to receive the data signal DS1.

The communication node C has no knowledge as to whether the communication node B has successfully received the data signal DS1. Therefore, the communication node C generates and broadcasts an echo signal E(DS1) in the consecutive echo sub-slot ESS1 of slot S1 (see Figures 3 and 8). The echo signal E(DS1) and the respective data signal DS1 may be identical, or preferably differ at most in an identifier. Such an identifier may be composed of a single bit or a single bit sequence, that identifies each signal as either a data signal or an echo signal.

By broadcasting the echo signal E(DS1) the communication node C augments the likelihood of a successful transmission of the data contained in data signal DS1 to its dedicated recipient, here communication node B. For instance, if communication

node B has not received the data signal DS1 from the communication node A in the transmission sub-slot TSS1 (see Figure 5) for whatever reason (e. g. noise, interference), the communication node B is given the opportunity to receive the information comprised by data signal DS1 in the consecutive echo sub-slot ESS1 by receiving the echo signal E(DS1) from communication node C.

In Figure 3, the communication node D cannot generate an echo signal because it has not received the data signal DS1 in the preceding transmission sub-slot TSS1 (see Figure 2).

If B successfully receives the data signal DS1 from communication node A, B processes the information contained therein. The generation of an echo signal by the communication node B is not necessary for obvious reasons.

In the consecutive transmission sub-slot TSS2, the communication node B broadcasts a data signal DS2 to the allocated downstream communication node C as illustrated in Figure 4. It is assumed here that all other communication nodes successfully receive the data signal DS2.

The communication node C determines that the received data signal DS2 is meant to be processed by communication node C (in other words by "itself") and proceeds accordingly without generating an echo signal.

The communication nodes A and D have no knowledge as to whether the communication node C has successfully received the data signal DS2. Therefore, the communication nodes A and D generate and broadcast an echo signal E(DS2) in the consecutive echo sub-slot ESS2 (see Figures 5 and 8). The

echo signal E(DS2) and the respective data signal DS2 may be identical, or preferably differ at most in the identifier mentioned above.

In the consecutive transmission sub-slot TSS3, the communication node C broadcasts a data signal DS3 to the allocated downstream communication node D as illustrated in Figures 6 and 8. It is assumed here that the communication nodes A and B receive the data signal DS3 whereas the transmission to communication node D fails.

The communication nodes A and B have no knowledge as to whether the communication node D has successfully received the data signal DS3. Therefore, the communication nodes A and B generate and broadcast an echo signal E(DS3) in the consecutive echo sub-slot ESS3 (see Figures 7 and 8). The repetition of the data transmission with respect to the data of data signal DS3 provides another chance for communication node D to receive the respective data.

The echo signal E(DS3) and the respective data signal DS3 may be identical, or preferably differ at most in the identifier mentioned above.

The further transmission of data and echo signals can proceed according to the principles laid out above.

Figure 9 shows an exemplary embodiment of a communication node 100 that can form any of the communication nodes A, B, C, D in the communication system 10 of Figures 1-8.

The communication node 100 comprises a transceiver 110 capable of transmitting and receiving electromagnetic

radiation, a processor unit 120 and a memory 130. The memory 130 stores a control program CP that allows the processor unit 120 to operate as explained above.

The control program CP comprises an echo software module ESM which - after activation - programs the processor to determine - upon receipt of a data signal from another communication node - whether the received data signal is directed to its communication node or another communication node of the communication system and - in the latter case - to generate an echo signal that corresponds to the received data signal.

Figure 10 shows another exemplary embodiment of a communication system 10 according to the present invention. The communication system 10 comprises a plurality of broadcast-type communication nodes A, B, C, and D.

The communication system 10 may form a time division multiple access (TDMA) system wherein each communication node directly or indirectly - i.e. via one or more other communication nodes - sends data signals DS1-DS4 to an addressed node and receives data signals DS1-DS4 from an arbitrary communication node of the system. The data signals DS1-DS4 are illustrated by arrows in Figure 10. The arrows' directions indicate the direction of the communication and thus define for each communication node which of the other communication nodes is the respective upstream node and the respective downstream node.

The communication system 10 is operated in a time-division multiplexing technique wherein the communication is carried out in consecutive time frames (see frames F1 and F2 in

Figure 13) which are divided into slots (see slots S1-S4 in Figure 13).

Each of the communication nodes A, B, C, and D transmits its data signals DS1-DS4 in the transmission sub-slot TSS1-TSS4 of an allocated slot (S1-S4) as illustrated in Figure 13. Figure 13 shows that the transmission sub-slot TSS1 is allocated to communication node A, the transmission sub-slot TSS2 is allocated to communication node B, the transmission sub-slot TSS3 is allocated to communication node C, and the transmission sub-slot TSS4 is allocated to communication node D.

In order to increase the reliability of the communication system 10, the communication nodes A, B, C, and D are configured to generate echo signals. The echo signals carry the same information as the echoed data signals and therefore increase the system's redundancy. The echo signals are transmitted in echo sub-slots ESS1-ESS4 (see Figure 13). This will be explained in an exemplary fashion with reference to Figures 11-12.

Figure 11 illustrates the communication system 10 during the transmission sub-slot TSS1 of frame F1 in Figure 13. The communication node A sends a data signal DS1 to the addressed communication node D. It is assumed here in an exemplary manner that the communication nodes B and C have received the data signal DS1 whereas the communication node D has failed to receive the data signal DS1.

The communication nodes B and C have no knowledge as to whether the communication node D has successfully received the data signal DS1. Therefore, the communication nodes B and

C generate and broadcast an echo signal E(DS1) in the consecutive echo sub-slot ESS1 of slot S1 (see Figures 12 and 13). The echo signal E(DS1) and the respective data signal DS1 may be identical, or preferably differ at most in an identifier. Such an identifier may be composed of a single bit or a single bit sequence, that identifies each signal as either a data signal or an echo signal.

Claims

1. Method of operating a communication system (10) that comprises at least four communication nodes (A, B, C, D) characterized in that:

- the communication system (10) is operated in a time-division multiplexing technique wherein the communication is carried out in consecutive time frames (F1, F2) which are divided into slots (S1-S4),
- each of the slots (S1-S4) comprises at least two consecutive sub-slots, hereinafter referred to as transmission sub-slot (TSS1-TSS4) and echo sub-slot (ESS1-ESS4),
- each of the communication nodes (A, B, C, D) has its own transmission sub-slot when transmitting data signals (DS1-DS4) to other communication nodes, and transmits its data signals (DS1-DS4) in its transmission sub-slot (TSS1-TSS4) to other communication nodes,
- each of the communication nodes (A, B, C, D), or a predefined subset of the communication nodes (A, B, C, D), that has received a data signal (DS1-DS4) in the preceding transmission sub-slot (TSS1-TSS4), analyzes the data signal (DS1-DS4) regarding a correct reception, and
- in case of a correct reception, each of the communication nodes (A, B, C, D), or said predefined subset of the communication nodes (A, B, C, D), determines whether the received data signal (DS1-DS4) is directed to itself or another communication node (A, B, C, D) of the communication system (10) and - in the latter case - generates and transmits a corresponding echo signal (E(DS1)-E(DS4)) in the consecutive echo sub-slot (ESS1-ESS4) of the same slot, and otherwise processes the received data signal (DS1-DS4),

- wherein the received data signal (DS1-DS4) and the corresponding echo signal (E(DS1)-E(DS4)) are identical, or differ at most in an identifier, preferably composed of a single bit or a single bit sequence, that identifies each signal as either a data signal (DS1-DS4) or an echo signal (E(DS1)-E(DS4)).

2. Method according to claim 1,
characterized in that
the slots are allocated in an arbitrary fashion to the communication nodes (A, B, C, D) by sending a management signal that pre-allocates the slots (S1-S4) to the communication nodes (A, B, C, D).

3. Method according to any of the preceding claims,
characterized in that
each of the communication nodes (A, B, C, D), or said predefined subset of the communication nodes (A, B, C, D), decodes received data signals (DS1-DS4) and analyzes a checksum that is included in each data signal (DS1-DS4), in order to determine whether a received data signal (DS1-DS4) is error-free.

4. Method according to any of the preceding claims,
characterized in that
the echoing communication nodes (A, B, C, D) send their echo signals (E(DS1)-E(DS4)) in a synchronized way, namely synchronized in the time and frequency domain with respect to the arrival time and the frequency of the previously received data signal (DS1-DS4) that has to be echoed.

5. Method according to any of the preceding claims,
characterized in that

during receipt of a data signal (DS1-DS4) in any of the transmission sub-slots (TSS1-TSS4) of another communication node (A, B, C, D) and before sending the corresponding echo signal (E(DS1)-E(DS4)) in the consecutive echo sub-slot (ESS1-ESS4), each echoing communication node (A, B, C, D) starts a timer and sends the corresponding echo signal (E(DS1)-E(DS4)) upon expiration of the timer.

6. Method according to any of the preceding claims, characterized in that
during receipt of a data signal (DS1-DS4) in any of the transmission sub-slots (TSS1-TSS4) of another communication node (A, B, C, D) and before sending the corresponding echo signal (E(DS1)-E(DS4)) in the consecutive echo sub-slot (ESS1-ESS4), each echoing communication node (A, B, C, D) identifies a synchronization bit sequence contained in the data signal (DS1-DS4) and synchronizes the transmission of the echo signal (E(DS1)-E(DS4)) with respect to the synchronization bit sequence, preferably by starting a timer upon receipt of the synchronization bit sequence and sending the corresponding echo signal (E(DS1)-E(DS4)) upon expiration of the timer.

7. Method according to any of the preceding claims, characterized in that
each of the echoing communication nodes (A, B, C, D) transmits the corresponding echo signal (E(DS1)-E(DS4)) at the same frequency at which the preceding data signal (DS1-DS4) has been received.

8. Method according to any of the preceding claims, characterized in that
- all slots in each time frame have the same length, and

- each echo sub-slot (ESS1-ESS4) has the same length as the precedent data transmission sub-slot.

9. Method according to any of the preceding claims, characterized in that

- the communication system (10) is a token ring system where each communication node (A, B, C, D) directly or indirectly - i.e. via one or more other communication nodes (A, B, C, D) that function as relay nodes (A, B, C, D) - sends data signals (DS1-DS4) to an allocated downstream communication node (A, B, C, D) and receives data signals (DS1-DS4) from an allocated upstream communication node (A, B, C, D), and
- the end and thereby the length of each transmission sub-slot (TSS1-TSS4) as well as the length of the consecutive echo sub-slot (ESS1-ESS4) is defined by the point in time when the respective token is sent to the allocated downstream communication.

10. Method according to any of the preceding claims, characterized in that

- one of the communication nodes (A, B, C, D) of the communication system (10) is a master and the other communication nodes (A, B, C, D) are slaves, and
- each slave synchronizes its internal clock with the master's clock.

11. Method according to any of the preceding claims, characterized in that

the master sends a master synchronization signal, preferably a master synchronization bit sequence, to the slaves in its transmission sub-slot (TSS1-TSS4), in one or more separate synchronization time sub-slots comprised by each time frame

and/or in a separate communication channel on a separate frequency.

12. Method according to any of the preceding claims, characterized in that

- in each of its transmission sub-slots (TSS1-TSS4), each of the communication nodes (A, B, C, D) transmits an information indicating from which other communication nodes (A, B, C, D) data signals (DS1-DS4) and/or echo signals (E(DS1)-E(DS4)) have been received in the current or preceding time frame and/or
- in each of its transmission sub-slots (TSS1-TSS4), each of the communication nodes (A, B, C, D) transmits an information indicating the quality of the received signals with respect to data signals (DS1-DS4) and/or echo signals (E(DS1)-E(DS4)) that have been received from other communication nodes (A, B, C, D) in the current or preceding time frame.

13. Method according to any of the preceding claims, characterized in that

- each of the slots (S1-S4) consists of two consecutive sub-slots, hereinafter referred to as transmission sub-slot (TSS1-TSS4) and echo sub-slot (ESS1-ESS4).

14. Communication system (10) comprising at least four communication nodes (A, B, C, D),
characterized in that
each of the communication nodes (A, B, C, D) is configured to carry out the method of any of the claims 1-13 or 17-28 and to determine - upon receipt of a data signal (DS1-DS4) from another communication node (A, B, C, D) - whether the received data signal (DS1-DS4) is directed to itself or

another communication node (A, B, C, D) of the communication system (10) and - in the latter case - to generate an echo signal (E(DS1)-E(DS4)) that corresponds to the received data signal.

15. Communication node (A, B, C, D) for a communication system (10) according to claim 14,
characterized in that
the communication node (A, B, C, D) is configured to carry out the method of any of the claims 1-13 or 17-28 and to determine - upon receipt of a data signal (DS1-DS4) from another communication node (A, B, C, D) - whether the received data signal (DS1-DS4) is directed to itself or another communication node (A, B, C, D) of the communication system (10) and - in the latter case - to generate an echo signal (E(DS1)-E(DS4)) that corresponds to the received data signal.

16. Communication node (A, B, C, D, 100) according to claim 15,
characterized in that
the communication node (A, B, C, D, 100) comprises
- a transceiver (110),
- a processor (120) and
- a memory (130) that stores an echo software module (ESM) which - after activation - programs the processor to carry out the method of any of the claims 1-13 or 17-28 and to determine - upon receipt of a data signal (DS1-DS4) from another communication node (A, B, C, D, 100) - whether the received data signal (DS1-DS4) is directed to itself or another communication node (A, B, C, D, 100) of the communication system (10) and - in the latter case - to

generate an echo signal (E(DS1)-E(DS4)) that corresponds to the received data signal.

17. Method of operating a communication system (10) that comprises at least four communication nodes (A, B, C, D) characterized in that:

- the communication system (10) is operated in a time-division multiplexing technique wherein the communication is carried out in consecutive time frames (F1, F2) which are divided into slots (S1-S4),
- at least one slot is allocated to each of the communication nodes (A, B, C, D),
- each of the slots (S1-S4) comprises, or preferably consists of, at least two consecutive sub-slots, hereinafter referred to as transmission sub-slot (TSS1-TSS4) and echo sub-slot (ESS1-ESS4),
- each of the communication nodes (A, B, C, D) transmits its data signals (DS1-DS4) in the transmission sub-slot (TSS1-TSS4) of the allocated slot (S1-S4),
- each of the communication nodes (A, B, C, D), or a predefined subset of the communication nodes (A, B, C, D), analyzes each data signal (DS1-DS4) that has been received from any other communication node (A, B, C, D) in the previous transmission sub-slot (TSS1-TSS4), regarding a correct reception, and
- in case of a correct reception, each of the communication nodes (A, B, C, D), or said predefined subset of the communication nodes (A, B, C, D), determines whether the received data signal (DS1-DS4) is directed to itself or another communication node (A, B, C, D) of the communication system (10) and - in the latter case - generates a corresponding echo signal (E(DS1)-E(DS4)) in

the consecutive echo sub-slot (ESS1-ESS4), and otherwise processes the received data signal (DS1-DS4),

- wherein the data signal (DS1-DS4) and the echo signal (E(DS1)-E(DS4)) are identical, or differ at most in an identifier, preferably composed of a single bit or a single bit sequence, that identifies each signal as either a data signal (DS1-DS4) or an echo signal (E(DS1)-E(DS4)).

18. Method according to claim 17,
characterized in that
the slots are allocated in an arbitrary fashion to the communication nodes (A, B, C, D) by sending a management signal that pre-allocates the slots (S1-S4) to the communication nodes (A, B, C, D).

19. Method according to any of the preceding claims 17-18,
characterized in that
each of the communication nodes (A, B, C, D), or said predefined subset of the communication nodes (A, B, C, D), decodes received data signals (DS1-DS4) and analyzes a checksum that is included in each data signal (DS1-DS4), in order to determine whether a received data signal (DS1-DS4) is error-free.

20. Method according to any of the preceding claims 17-19,
characterized in that
the echoing communication nodes (A, B, C, D) send their echo signals (E(DS1)-E(DS4)) in a synchronized way, namely synchronized in the time and frequency domain with respect to the arrival time and the frequency of the previously received data signal (DS1-DS4) that has to be echoed.

21. Method according to any of the preceding claims 17-20,

characterized in that
during receipt of a data signal (DS1-DS4) in any of the transmission sub-slots (TSS1-TSS4) of another communication node (A, B, C, D) and before sending the corresponding echo signal (E(DS1)-E(DS4)) in the consecutive echo sub-slot (ESS1-ESS4), each echoing communication node (A, B, C, D) starts a timer and sends the corresponding echo signal (E(DS1)-E(DS4)) upon expiration of the timer.

22. Method according to any of the preceding claims 17-21, characterized in that
during receipt of a data signal (DS1-DS4) in any of the transmission sub-slots (TSS1-TSS4) of another communication node (A, B, C, D) and before sending the corresponding echo signal (E(DS1)-E(DS4)) in the consecutive echo sub-slot (ESS1-ESS4), each echoing communication node (A, B, C, D) identifies a synchronization bit sequence contained in the data signal (DS1-DS4) and synchronizes the transmission of the echo signal (E(DS1)-E(DS4)) with respect to the synchronization bit sequence, preferably by starting a timer upon receipt of the synchronization bit sequence and sending the corresponding echo signal (E(DS1)-E(DS4)) upon expiration of the timer.

23. Method according to any of the preceding claims 17-22, characterized in that
each of the echoing communication nodes (A, B, C, D) transmits the corresponding echo signal (E(DS1)-E(DS4)) at the same frequency at which the preceding data signal (DS1-DS4) has been received.

24. Method according to any of the preceding claims 17-23, characterized in that

- all slots in each time frame have the same length, and
- each echo sub-slot (ESS1-ESS4) has the same length as the precedent data transmission sub-slot.

25. Method according to any of the preceding claims 17-24, characterized in that
- the communication system (10) is a token ring system where each communication node (A, B, C, D) directly or indirectly - i.e. via one or more other communication nodes (A, B, C, D) that function as relay nodes (A, B, C, D) - sends data signals (DS1-DS4) to an allocated downstream communication node (A, B, C, D) and receives data signals (DS1-DS4) from an allocated upstream communication node (A, B, C, D), and
- the end and thereby the length of each transmission sub-slot (TSS1-TSS4) as well as the length of the consecutive echo sub-slot (ESS1-ESS4) is defined by the point in time when the respective token is sent to the allocated downstream communication.

26. Method according to any of the preceding claims 17-25, characterized in that
- one of the communication nodes (A, B, C, D) of the communication system (10) is a master and the other communication nodes (A, B, C, D) are slaves, and
- each slave synchronizes its internal clock with the master's clock.

27. Method according to any of the preceding claims 17-26, characterized in that
the master sends a master synchronization signal, preferably a master synchronization bit sequence, to the slaves in its transmission sub-slot (TSS1-TSS4), in one or more separate

synchronization time sub-slots comprised by each time frame and/or in a separate communication channel on a separate frequency.

28. Method according to any of the preceding claims 17-27, characterized in that

- in each of its transmission sub-slots (TSS1-TSS4), each of the communication nodes (A, B, C, D) transmits an information indicating from which other communication nodes (A, B, C, D) data signals (DS1-DS4) and/or echo signals (E(DS1)-E(DS4)) have been received in the current or preceding time frame and/or
- in each of its transmission sub-slots (TSS1-TSS4), each of the communication nodes (A, B, C, D) transmits an information indicating the quality of the received signals with respect to data signals (DS1-DS4) and/or echo signals (E(DS1)-E(DS4)) that have been received from other communication nodes (A, B, C, D) in the current or preceding time frame.

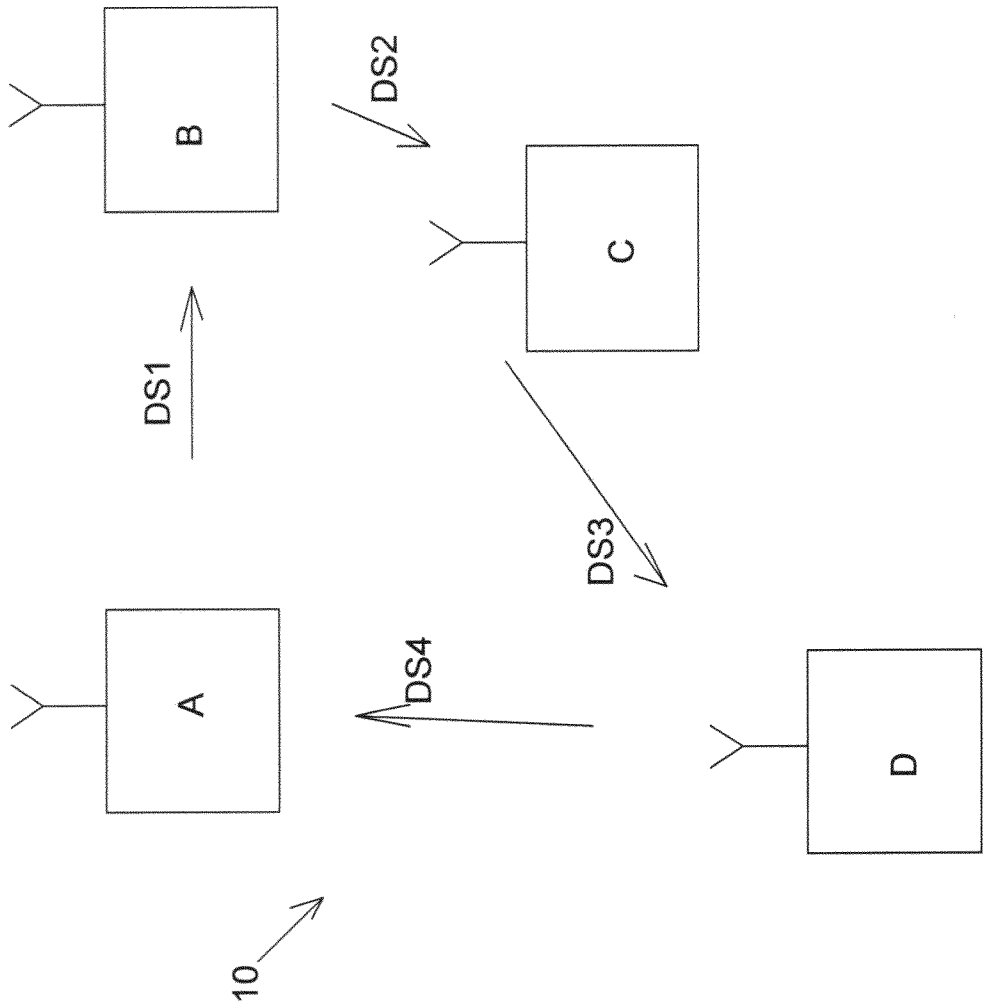

Fig. 1

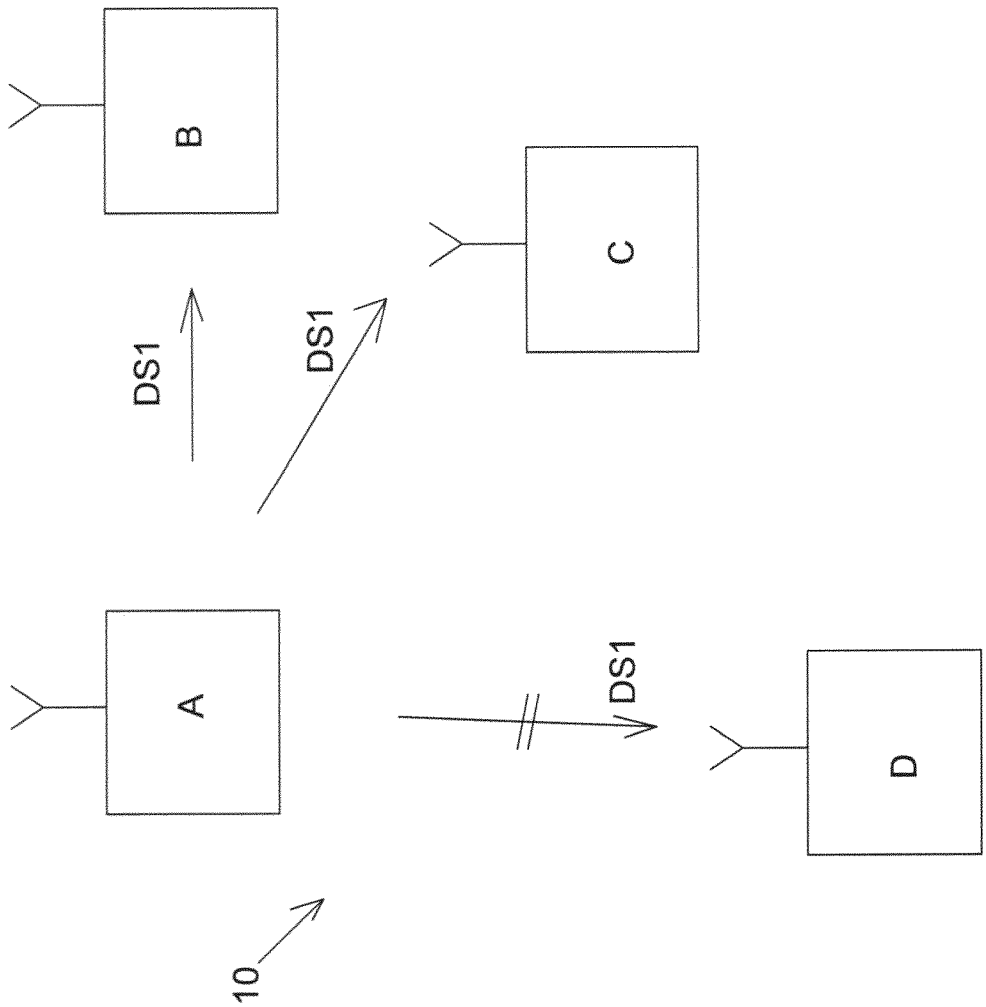

Fig. 2

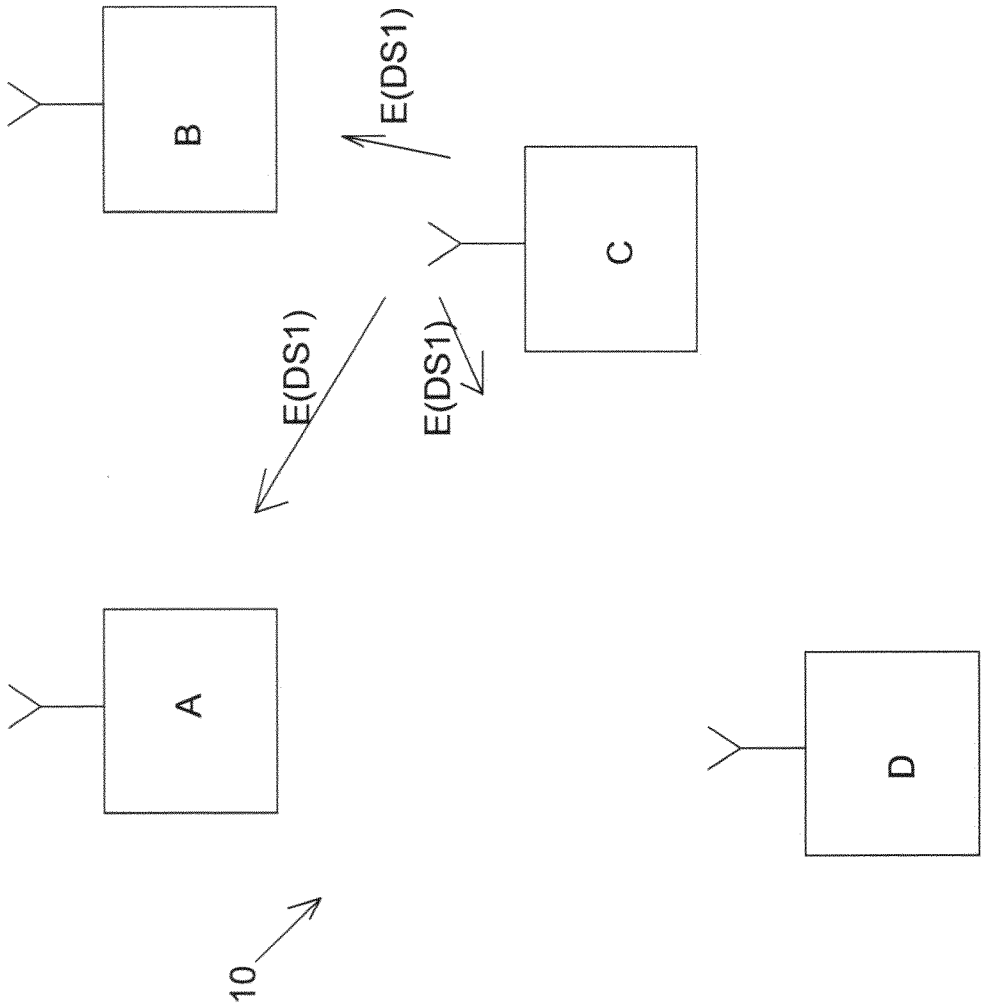

Fig. 3

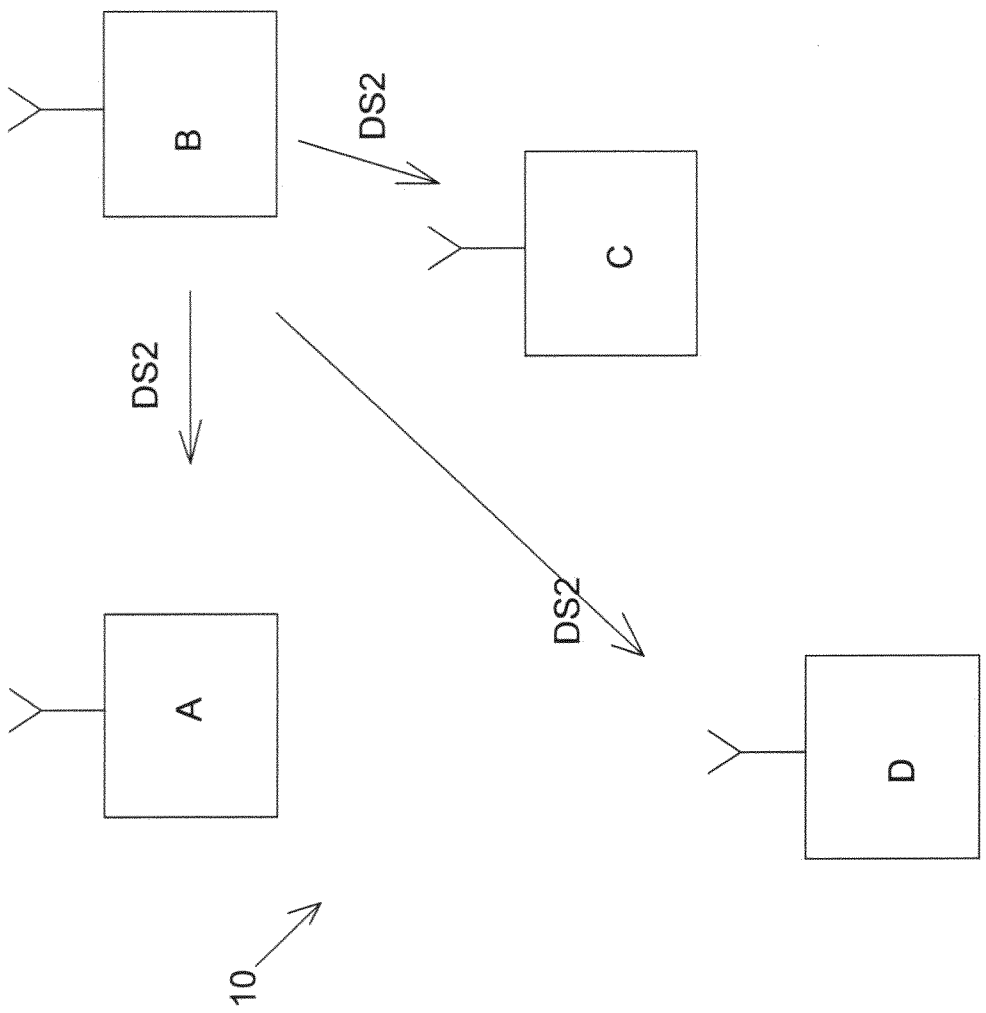

Fig. 4

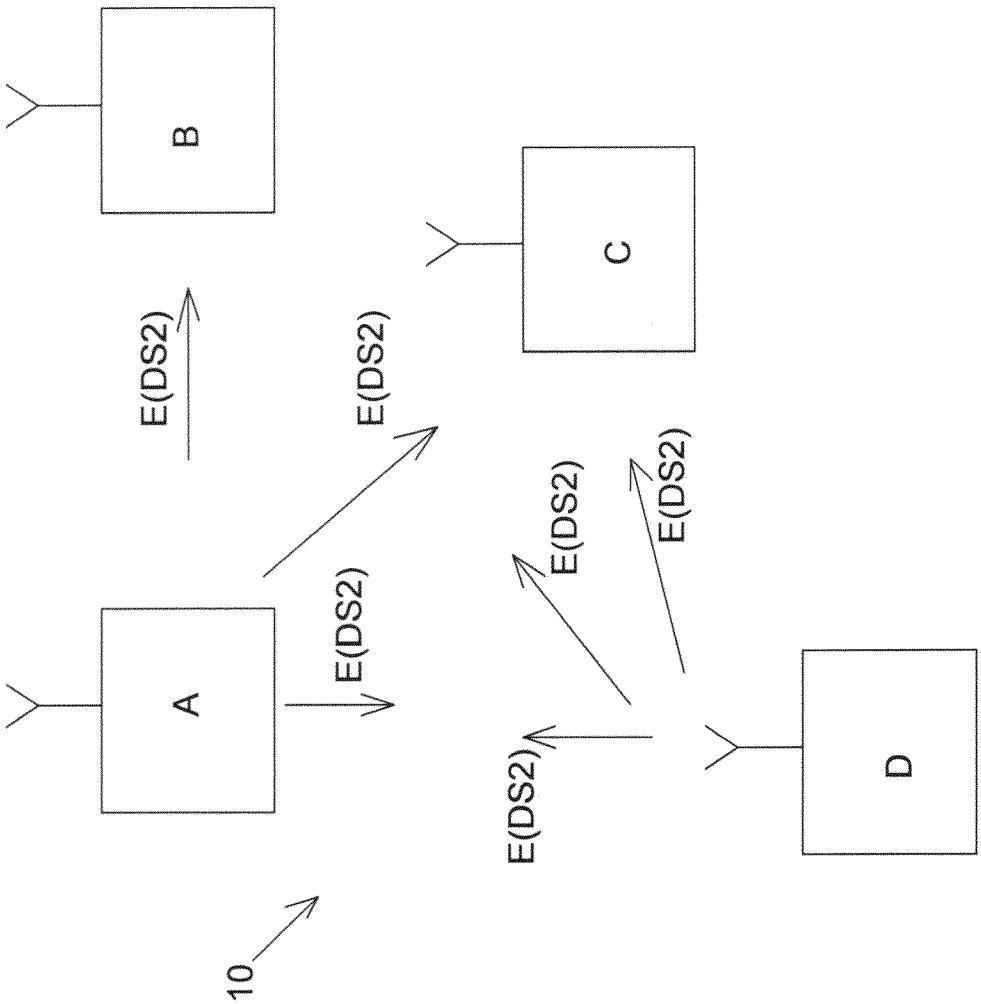

Fig. 5

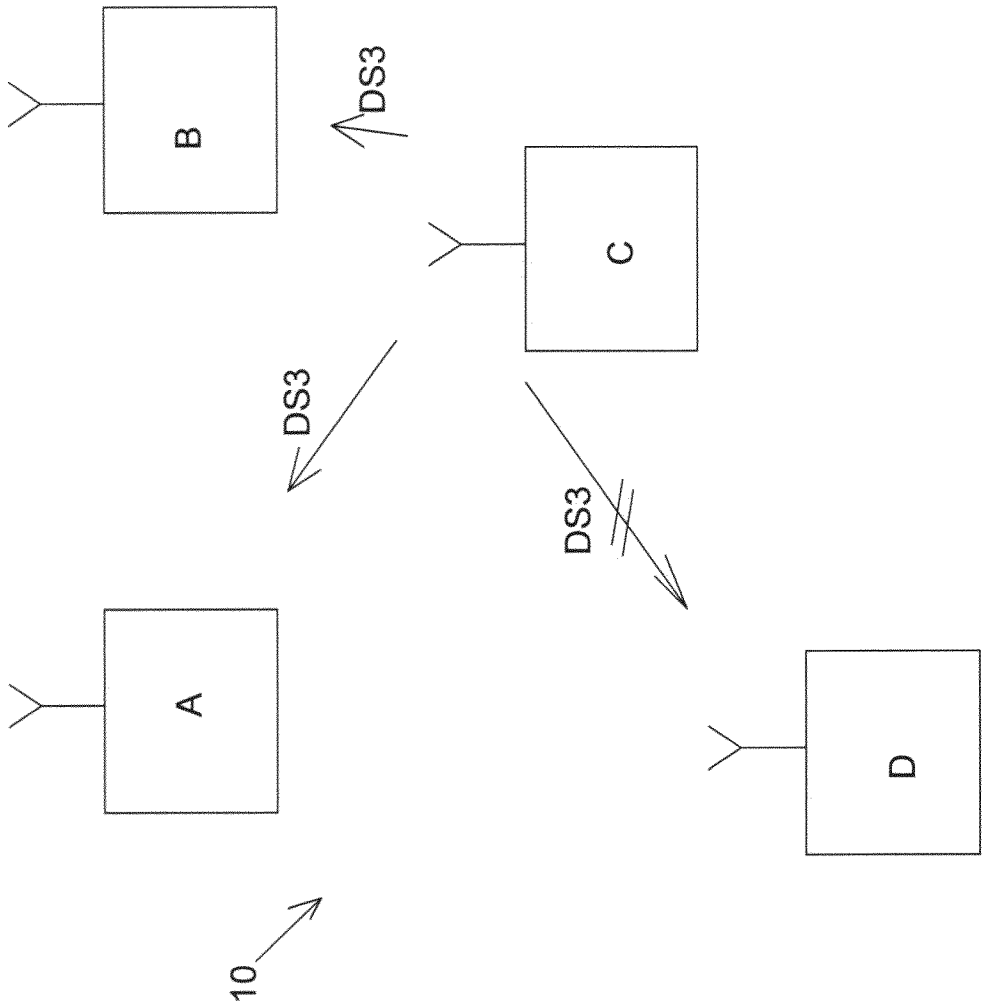

Fig. 6

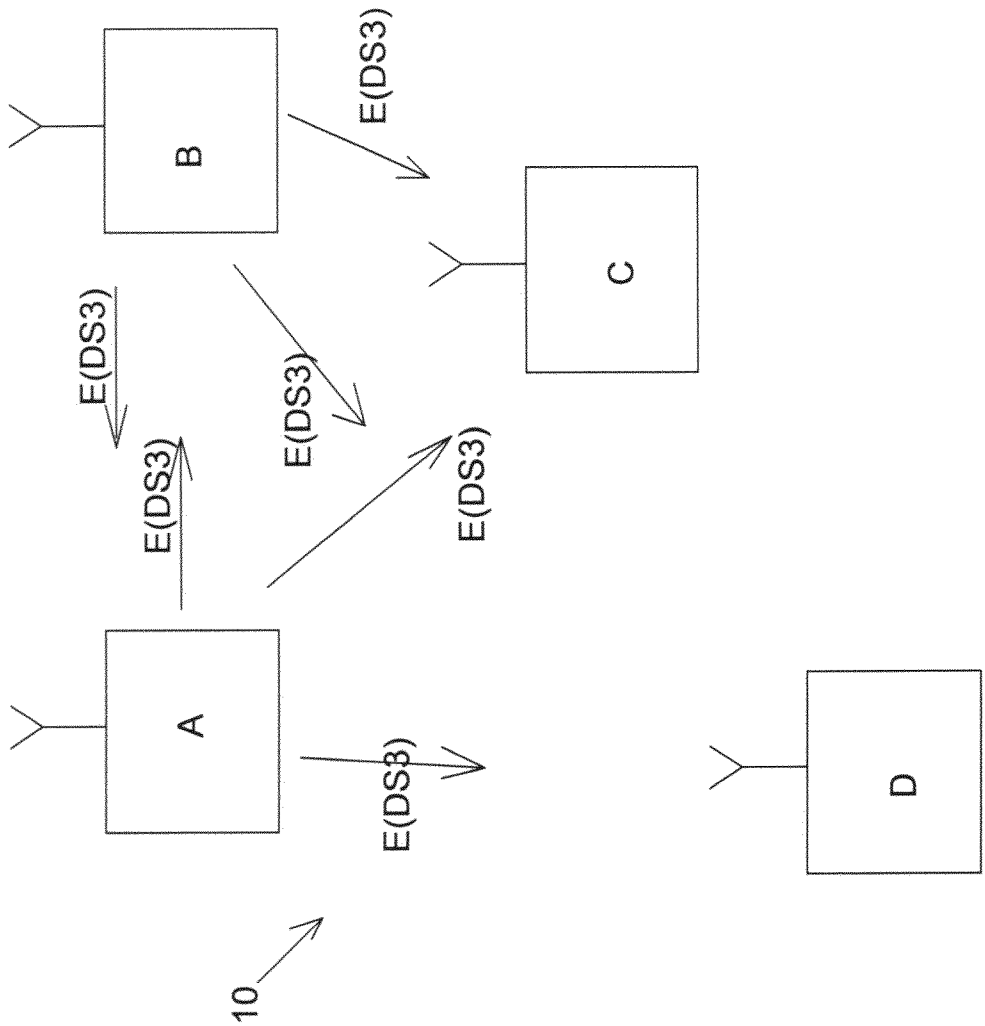

Fig. 7

frame	F1								F2	
slot	S1		S2		S3		S4		S1	
sub-slot	TSS1	ESS1	TSS2	ESS2	TSS3	ESS3	TSS4	ESS4	TSS1	ESS1
transmitting nodes	A	C	B	A D	C	A B	D	B C	A	C D
transmitted signal	DS1	E(DS1)	DS2	E(DS2)	DS3	E(DS3)	DS4	E(DS4)	DS5	E(DS5)

Fig. 8

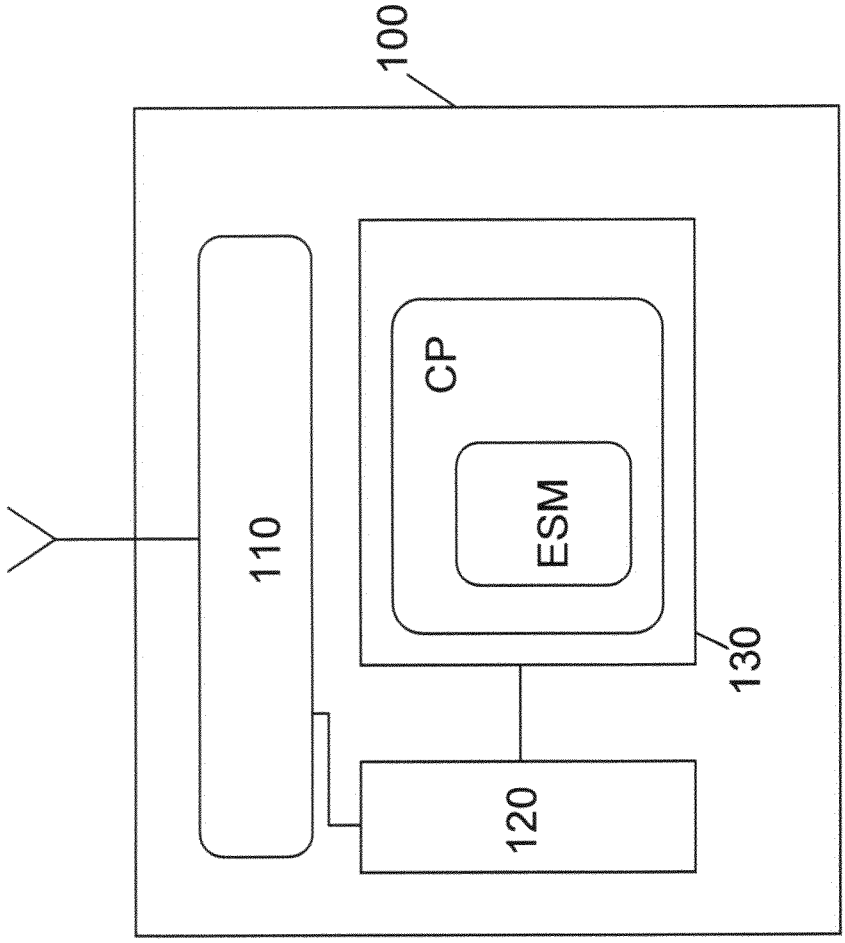

Fig. 9

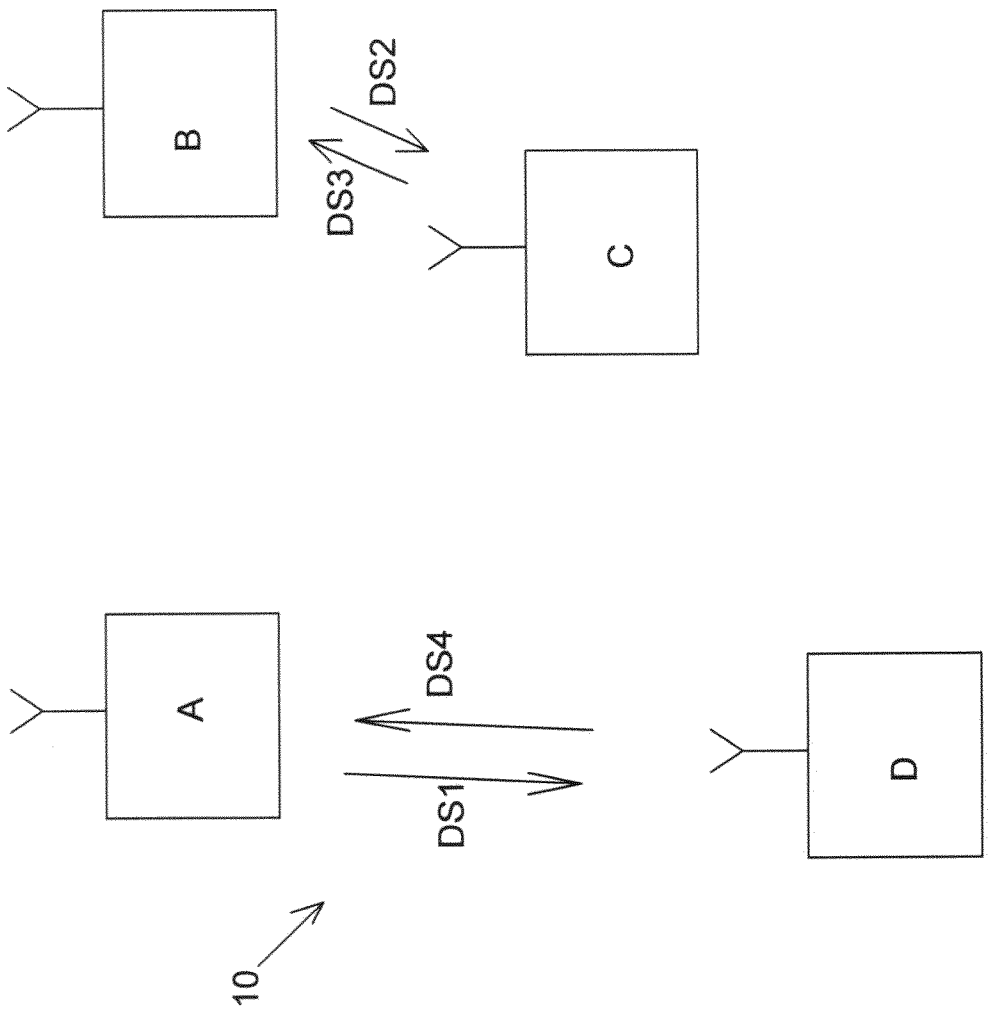

Fig. 10

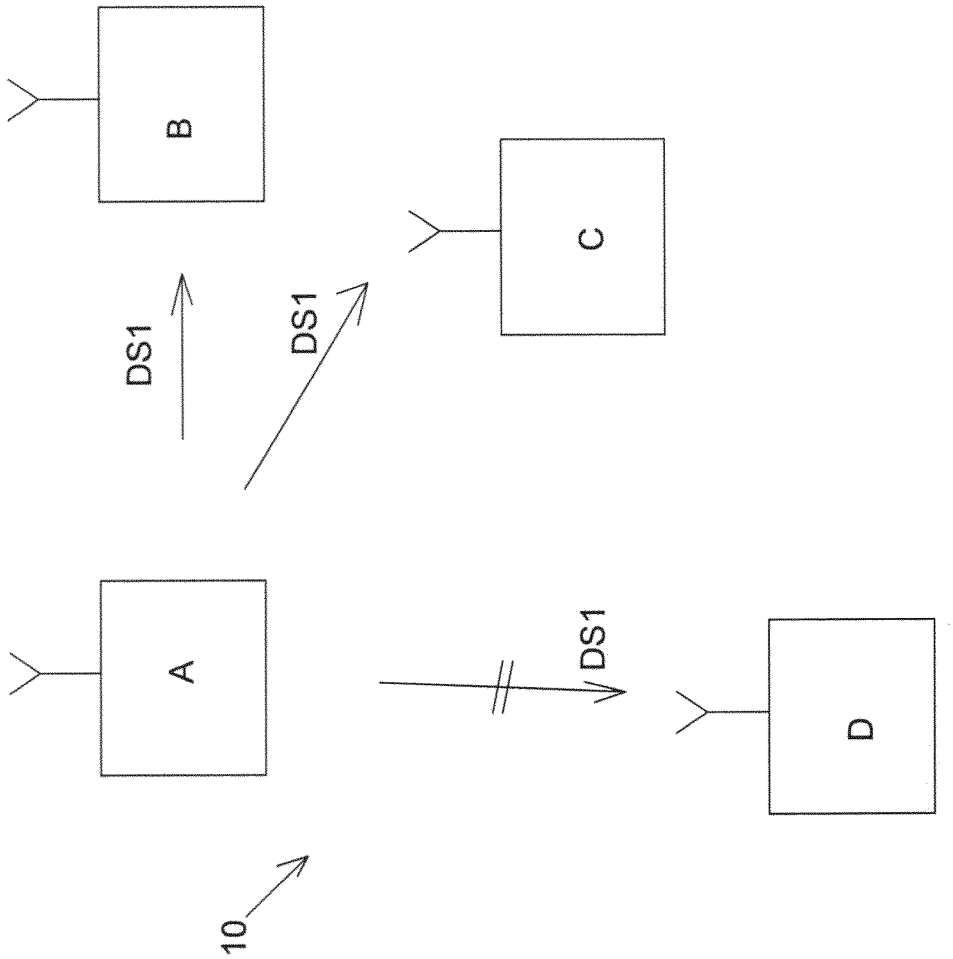

Fig. 11

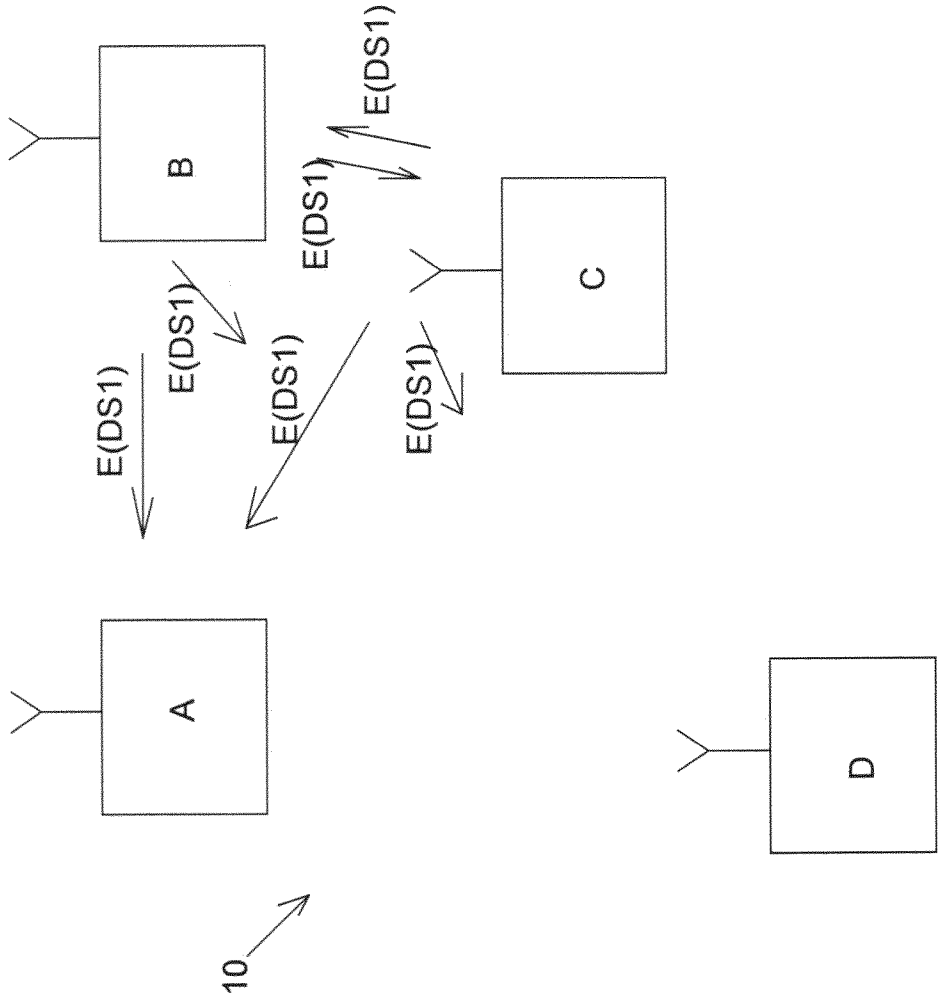

Fig. 12

frame	F1								F2	
slot	S1		S2		S3		S4		S1	
sub-slot	TSS1	ESS1	TSS2	ESS2	TSS3	ESS3	TSS4	ESS4	TSS1	ESS1
transmitting nodes	A	B C	B	A D	C	A D	D	B C	A	B C
transmitted signal	DS1	E(DS1)	DS2	E(DS2)	DS3	E(DS3)	DS4	E(DS4)	DS5	E(DS5)
addressed node	D	D	C	C	B	B	A	A	D	D

Fig. 13

INTERNATIONAL SEARCH REPORT

International application No
PCT/EP2017/054765

A. CLASSIFICATION OF SUBJECT MATTER
INV. H04L1/08 H04L1/00
ADD.

According to International Patent Classification (IPC) or to both national classification and IPC

B. FIELDS SEARCHED

Minimum documentation searched (classification system followed by classification symbols)
H04L

Documentation searched other than minimum documentation to the extent that such documents are included in the fields searched

Electronic data base consulted during the international search (name of data base and, where practicable, search terms used)

EPO-Internal, WPI Data

C. DOCUMENTS CONSIDERED TO BE RELEVANT

Category*	Citation of document, with indication, where appropriate, of the relevant passages	Relevant to claim No.
A	EP 2 110 979 A1 (NOKIA SIEMENS NETWORKS OY [FI]) 21 October 2009 (2009-10-21) figures 1-4 paragraphs [0044] - [0049] -----	1-28
A	US 2013/016600 A1 (HWANG SUNG HO [KR] ET AL) 17 January 2013 (2013-01-17) figure 3 paragraphs [0041] - [0044] -----	1-28

☐ Further documents are listed in the continuation of Box C.

☒ See patent family annex.

* Special categories of cited documents :

"A" document defining the general state of the art which is not considered to be of particular relevance

"E" earlier application or patent but published on or after the international filing date

"L" document which may throw doubts on priority claim(s) or which is cited to establish the publication date of another citation or other special reason (as specified)

"O" document referring to an oral disclosure, use, exhibition or other means

"P" document published prior to the international filing date but later than the priority date claimed

"T" later document published after the international filing date or priority date and not in conflict with the application but cited to understand the principle or theory underlying the invention

"X" document of particular relevance; the claimed invention cannot be considered novel or cannot be considered to involve an inventive step when the document is taken alone

"Y" document of particular relevance; the claimed invention cannot be considered to involve an inventive step when the document is combined with one or more other such documents, such combination being obvious to a person skilled in the art

"&" document member of the same patent family

Date of the actual completion of the international search	Date of mailing of the international search report
31 May 2017	09/06/2017

Name and mailing address of the ISA/	Authorized officer
European Patent Office, P.B. 5818 Patentlaan 2 NL - 2280 HV Rijswijk Tel. (+31-70) 340-2040, Fax: (+31-70) 340-3016	Marjanovic, Djordje

INTERNATIONAL SEARCH REPORT

Information on patent family members

International application No
PCT/EP2017/054765

Patent document cited in search report	Publication date	Patent family member(s)	Publication date
EP 2110979 A1	21-10-2009	NONE	
US 2013016600 A1	17-01-2013	KR 20130007775 A	21-01-2013
		US 2013016600 A1	17-01-2013