Dec. 18, 1928. 1,695,990

L. ALTPETER

CENTRIFUGE

Filed Jan. 26, 1927 2 Sheets-Sheet 1

Fig. 1

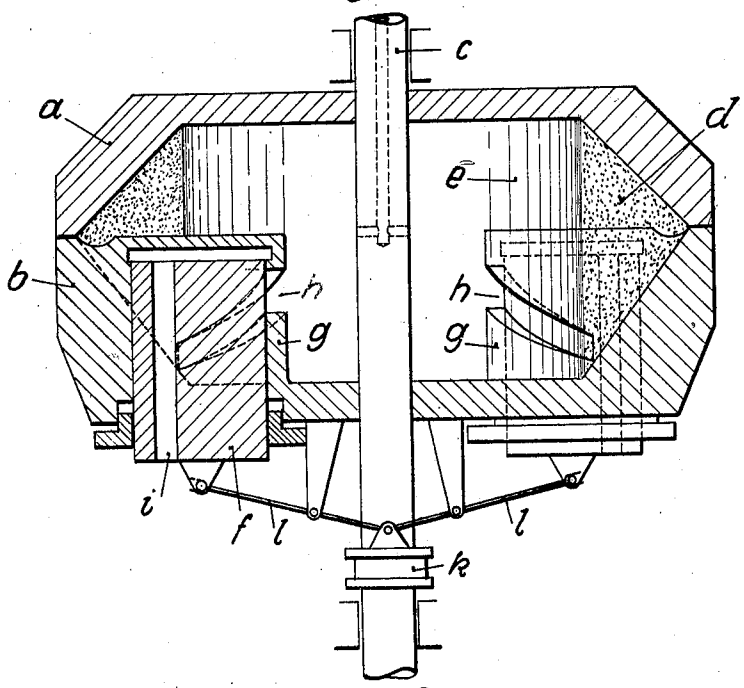

Fig. 2

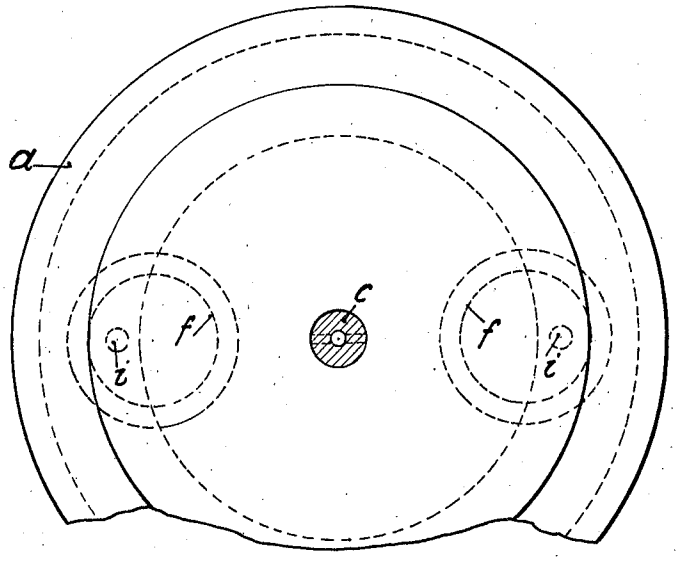

INVENTOR:
Ludwig Altpeter
BY: Pierce, Boyce & Bakeless
ATTORNEYS

Dec. 18, 1928. 1,695,990

L. ALTPETER

CENTRIFUGE

Filed Jan. 26, 1927 2 Sheets-Sheet 2

Fig. 3

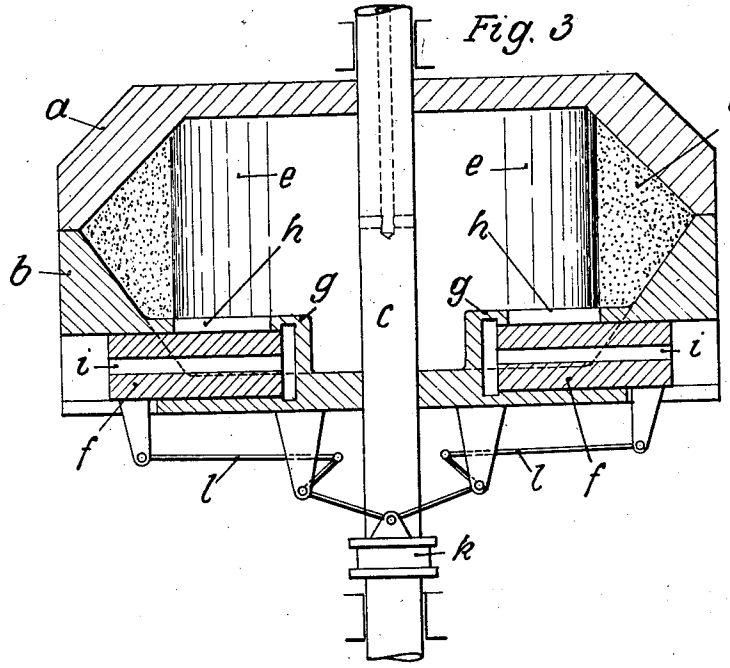

Fig. 4

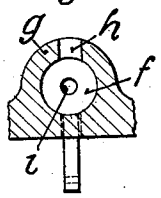

Fig. 5

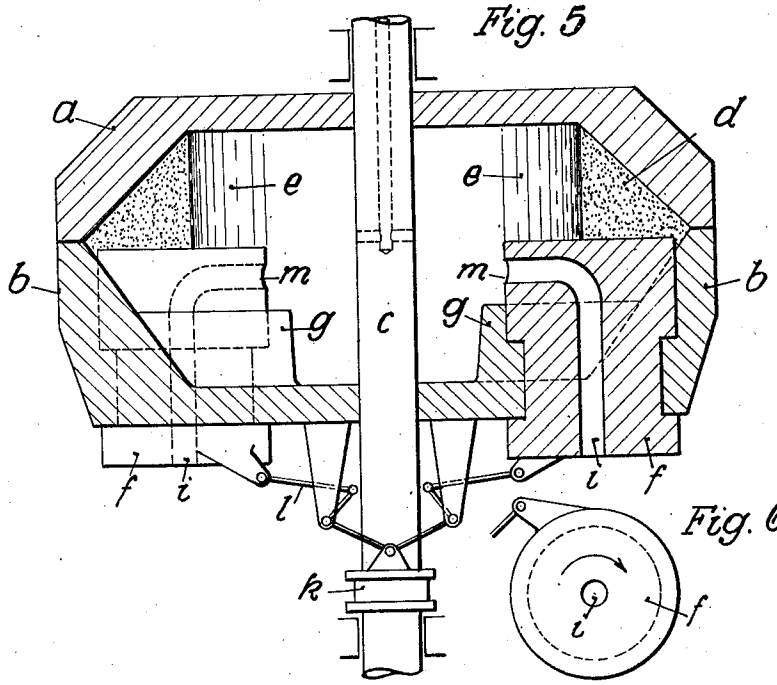

Fig. 6

INVENTOR:
Ludwig Altpeter
BY: Kings, Boyce & Bakelaar
ATTORNEYS

Patented Dec. 18, 1928. 1,695,990

UNITED STATES PATENT OFFICE.

LUDWIG ALTPETER, OF TRIER, GERMANY.

CENTRIFUGE.

Application filed January 26, 1927, Serial No. 163,603, and in Germany January 30, 1926.

This invention concerns rotary centrifuges for, for example, the separation of solid constituents from a liquid and relates in particular to a device which enables the separated or purified liquid to be drawn off, during operation, from the rotating drum without the formation of eddies or agitation and fouling of the purified liquid being caused as was hitherto the case when stationary jacket-tubes, projecting into the drum from outside, were employed. Such tubes are, furthermore, only applicable to centrifuging machines of which the centrifuging drum is open upwardly thus allowing them to be filled to a limited extent only.

In contradistinction thereto, in the present invention, one or more overflow devices, adjustably mounted in the closed centrifuging drum within the liquid zone, rotate with the drum and are adapted to be adjusted during rotation relatively to the level of the liquid so that the liquid can be drawn off to any desired extent without agitation or the formation of eddies. Since this drawing off device rotates with the drum it is not harmful if it happens to come in contact, during its adjustment, with the heavy or solid constituents already separated, of the material centrifuged since agitation is not caused thereby. The drawing-off devices described are simple overflow devices, whereby the liquid runs out freely, in contradistinction to the known devices, wherein the liquid is drawn or forced out.

Various embodiments of the invention are illustrated by way of example in the accompanying drawings in which:

Figs. 1 and 2 show one construction of centrifuge according to the present invention in vertical section and plan respectively,

Fig. 3 is a vertical section of a second construction,

Fig. 4 a sectional detail thereof,

Fig. 5 a vertical section of a third construction and

Fig. 6 a detail thereof.

Referring to Figs. 1 and 2 of the drawings the reference letters *a b* indicate the cups or cones of the centrifuge which are pressed together during the centrifuging operation. The material to be centrifuged is introduced into the interior of the centrifuge through the hollow shaft *c*, and after a certain period of centrifuging separates into its lighter and heavier or into liquid and solid constituents. The heavier or solid particles *d* collect at the outside at the inner circumference of the drum *a b* while the lighter and liquid particles *e* collect nearer the centre. The present invention is particularly concerned with the drawing off during operation of the lighter particles *e* disposed at the inside after which the drum may be opened and the solid particles *d* also removed. The drawing off device consists of valves *f* adapted to slide, parallel to the axis *c* of rotation, in guides *g* in the drum. Each guide *g* is provided with a helical groove *h*. In the end position of the valves, as illustrated, the latter close the said grooves *h*. If, however, the said valves *f* are moved downwardly the grooves *h*, are more or less opened. Since the helical grooves *h*, in accordance with their pitch, dip deeper and deeper radially toward the outside into the liquid *e*, finally approaching the solid constituents *d* of the material centrifuge it is possible in this manner by adjustment of the valves *f* to draw off the entire liquid through the draw off passages *i* in the slides. In every intermediate position the valves *f* form an overflow through which the liquid runs away to an extent corresuponding to that to which the helical grooves *h* are opened. The adjustment of the valves *f* may, for example, be effected through the intermediary of rods *l* with the assistance of a sleeve *k* slidably mounted on the shaft *f*.

In the modification illustrated in Figs. 3 and 4 the drawing off devices *f* are adapted to be displaced radially, instead of axially, in the guides *g* in the drum half *b*. In this case the grooves *h* in the guides may be straight instead of helical. If the valves *f* are displaced radially outwardly by adjustment of the sleeve *k* then the inner ends thereof open the grooves *h* to a gradually increasing extent so that the liquid *e* passes through the passages *i* to the outlet. In this case also the valves *f* form purely overflow devices.

Finally in the construction illustrated in Figs. 5 and 6 the valves *f* are constructed as cylindrical members and are rotatably mounted in corresponding cylindrical guides *g* in the drum half *b*. The drawing off passages *i* in the rotary valves *f* are bent inwardly at their upper ends. If the rotary valves *f* are rotated by adjustment of the sleeve *k* the upper terminals *m* of the drawing off passages are immersed to a greater and greater extent in the liquid *e*, whereby

the latter is caused to run off partially or wholly by means of simply overflow.

The illustrated embodiments of the overflow devices *f* should be regarded merely as examples. The valves may be mounted so as to be capable of movement in any suitable manner in the closed drum, it being essential merely that they should rotate continuously with the rotating drum.

I claim:

1. A centrifugal machine, comprising in combination, a two-part horizontally separable drum mounted for rotation, a movable member disposed in the lower part of said drum and having an outlet passage therethrough normally out of communication with the drum, and means for moving said member to carry its outlet passage into communication with the drum at varying distances from the center of said drum.

2. A centrifugal machine, comprising in combination, a two-part horizontally separable drum mounted for rotation, a movable member disposed in the lower part of said drum and having an outlet passage therethrough normally out of communication with the drum, and means for moving said member to carry its outlet passage into communication with the drum at varying distances from the center and top of said drum.

3. A centrifugal machine, comprising in combination, a two-part horizontally separable drum mounted for rotation, a hollow cylinder disposed in the lower part of said drum within the area constituting the liquid zone during operation of the drum, said cylinder having an opening in its wall communicating with the said zone throughout the width of the zone, a piston movable in said cylinder and having an outlet passage normally out of communication with said opening, and means for moving said piston to carry its outlet passage into communication with said opening at varying distances from the center of the drum.

4. A centrifugal machine, comprising in combination, a two-part horizontally separable drum mounted for rotation, a hollow cylinder disposed in the lower part of said drum within the area constituting the liquid zone during operation of the drum, said cylinder having an opening in its wall communicating with said zone throughout the width of the zone and at varying points in the direction of the axis of the drum, a piston reciprocable in said cylinder and having an outlet passage normally out of communication with said opening, and means for reciprocating said piston thereby to carry its outlet passage into communication with said opening at any point in the length of the opening.

5. A centrifugal machine, comprising in combination, a rotatable shaft, a two-part horizontally separable drum mounted on said shaft for rotation therewith, a hollow cylinder disposed in the lower part of said drum within the area constituting the liquid zone during operation of the drum, said cylinder having a spirally directed opening in its wall communicating with said zone throughout the width of the zone and at varying points in the direction of the axis of the drum, a piston movable in said cylinder and having an outlet passage normally out of communciation with said opening, a movable sleeve disposed on said shaft for sliding movement axially thereof, and a pivoted lever connected to said sleeve and piston for reciprocating the latter in response to axial movement of said sleeve.

In testimony whereof I affix my signature.

LUDWIG ALTPETER.