Jan. 22, 1929. 1,699,972

L. S. JONES ET AL

MACHINE FOR TREATING TILE

Filed March 20, 1923 4 Sheets-Sheet 1

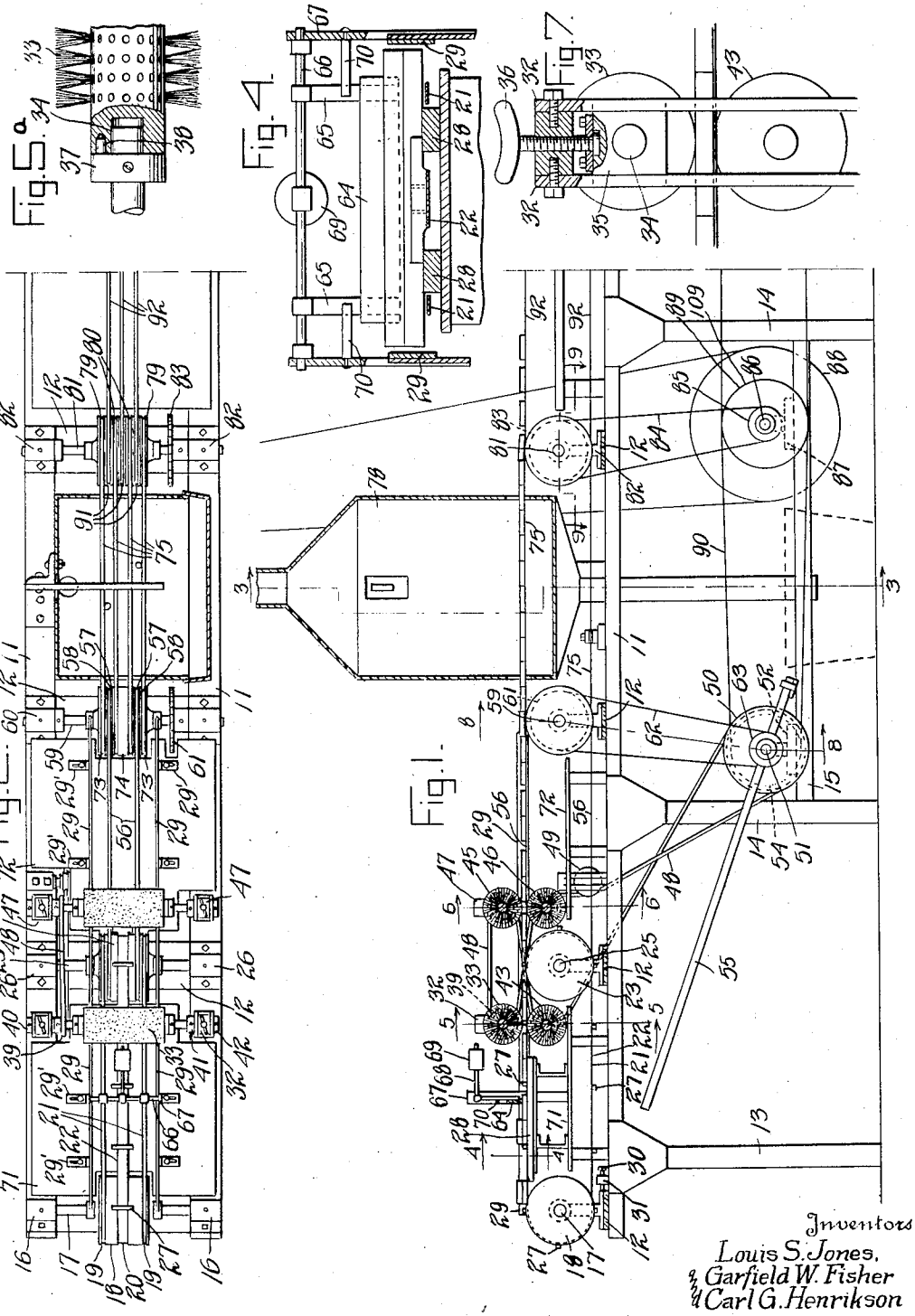

Fig. 5a

Fig. 4

Fig. 7

Fig. 2

Fig. 1

Inventors
Louis S. Jones,
Garfield W. Fisher
Carl G. Henrikson

By

Attorney

Jan. 22, 1929. 1,699,972

L. S. JONES ET AL

MACHINE FOR TREATING TILE

Filed March 20, 1925 4 Sheets-Sheet 2

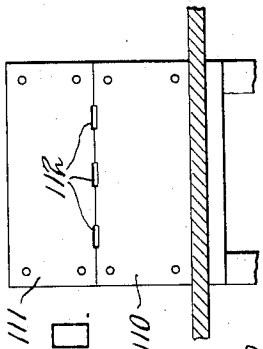

Fig. 10.

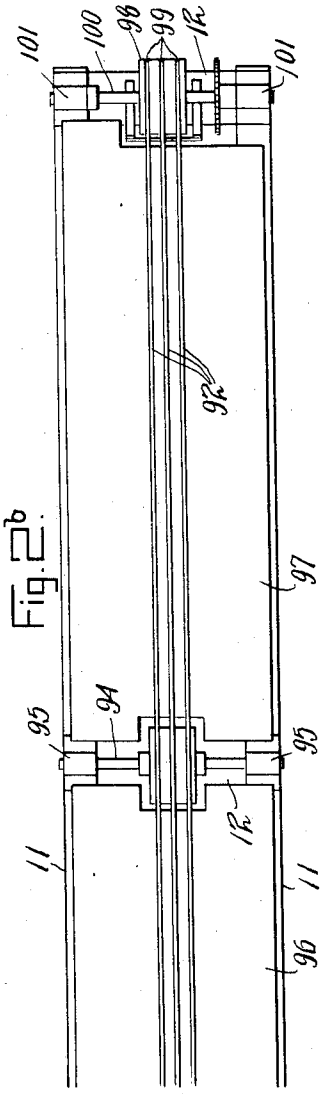

Fig. 2b.

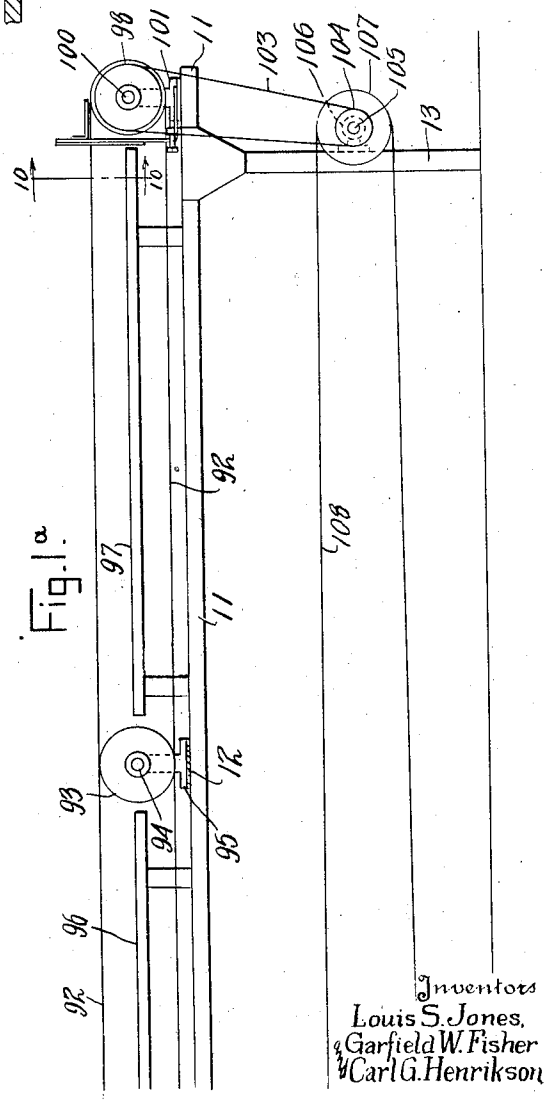

Fig. 1a.

Inventors
Louis S. Jones,
Garfield W. Fisher
& Carl G. Henrikson

By

Attorney

Jan. 22, 1929. 1,699,972

L. S. JONES ET AL

MACHINE FOR TREATING TILE

Filed March 20, 1925 4 Sheets-Sheet 3

Fig. 8.

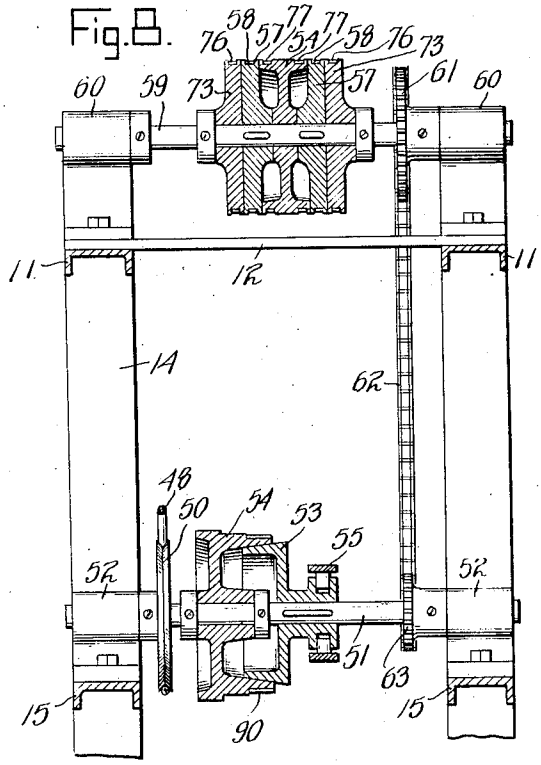

Fig. 3.

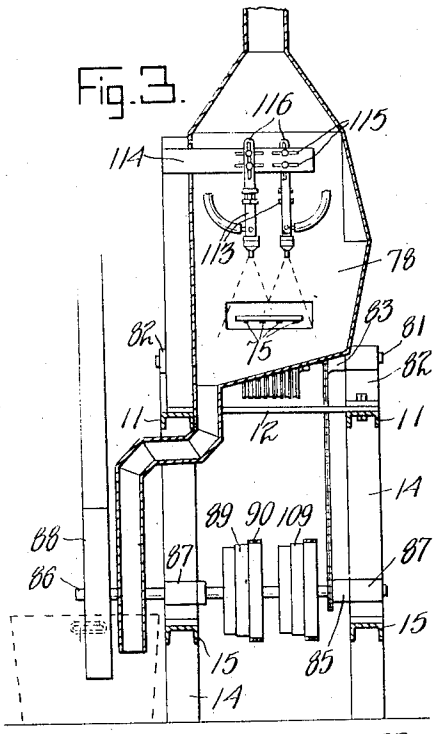

Fig. 9.

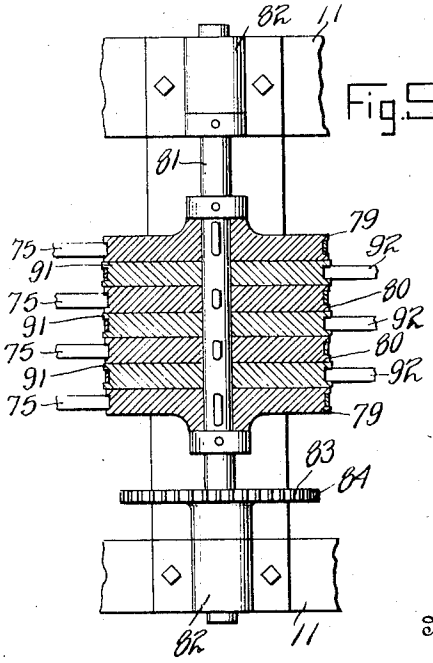

Inventors
Louis S. Jones,
Garfield W. Fisher
Carl G. Henrikson

By

Attorney

Jan. 22, 1929. 1,699,972

L. S. JONES ET AL

MACHINE FOR TREATING TILE

Filed March 20, 1925 4 Sheets-Sheet 4

Fig. 5.

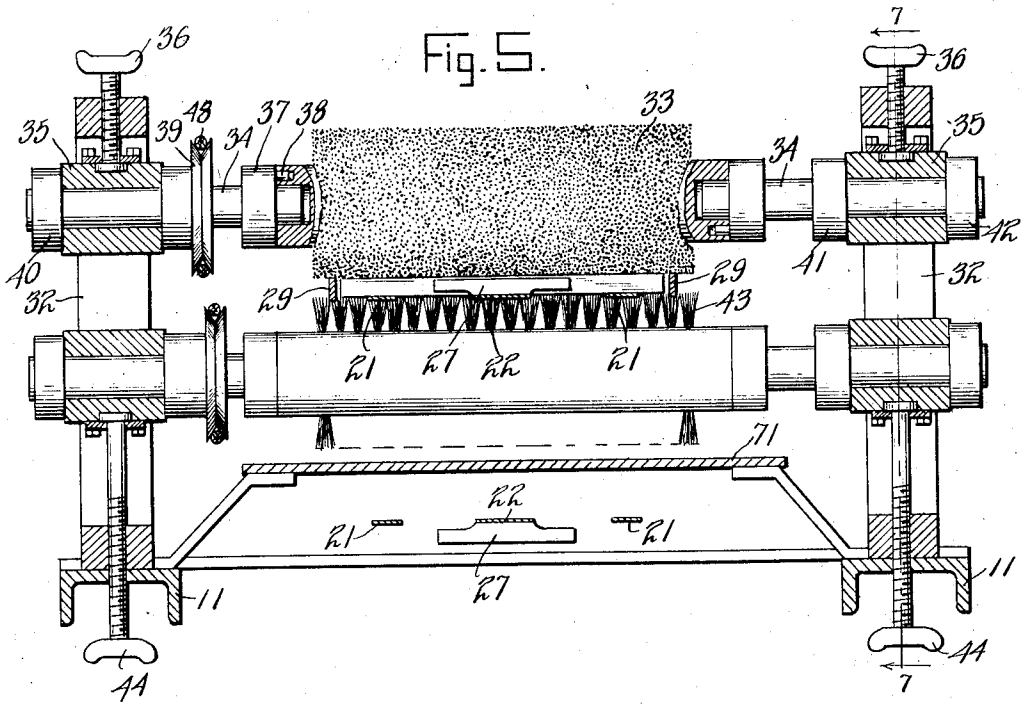

Fig. 6.

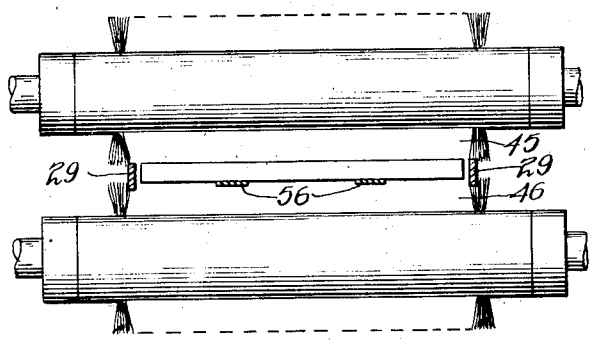

Inventors
Louis S. Jones,
Garfield W. Fisher
Carl G. Henrikson

By

Attorney

Patented Jan. 22, 1929. 1,699,972

UNITED STATES PATENT OFFICE.

LOUIS S. JONES, GARFIELD W. FISHER, AND CARL G. HENRIKSON, OF ANDERSON, INDIANA, ASSIGNORS, BY MESNE ASSIGNMENTS, TO THE NATIONAL TILE COMPANY OF ANDERSON, INDIANA, A CORPORATION OF OHIO.

MACHINE FOR TREATING TILE.

Application filed March 20, 1925. Serial No. 17,079.

Our said invention relates to machines for treating tiles, said machines being intended to apply a liquid to flat tiles, the character of the liquid being such that when fired it becomes a glaze and the application being in the form of an atomized spray of glazing compound mixed with water to make it thin enough for use in an atomizer. Preferably the device will be so arranged as to apply a descending spray to the objects to be treated.

Other objects are to control and adjust the thickness of the layer of liquid deposited, to render it more uniform in thickness than heretofore, and to make the process cheaper and more expeditious. We have found that tile treated by our method can be picked up and handled without damage to the coating by the fingers of the operatives immediately after the completion of the spraying operation. Apparently this is due partly to the drying of the atomized particles of the compound by the air used in generating the spray as well as by the surrounding air and perhaps partly to the fact that the layer is made very uniform by our method so that it dries equally over all parts to which the spray is applied.

Our method enables the operator feeding the tile to inspect the tile for defects in the body thereof before it goes on the machine. It further enables the operator to place each tile in exactly the same position on the bands, or belts, thereby allowing each tile to pass under the sprayer in exactly the same position, consequently causing the glaze on each tile to be more uniform in thickness, whether the tile be flat or of irregular shape.

Referring to the accompanying drawings which are made a part hereof and on which similar reference characters indicate similar parts,

Figures 1 and 1ª form a side elevation of the entire machine with parts in section,

Figures 2 and 2ᵇ, plan views of the machine with parts thereof in section,

Figure 3 is a vertical transverse section on line 3—3 of Fig. 1,

Figure 4, a detail section on line 4—4 of Fig. 1, showing details of the feeding device,

Figure 5, a detail section on line 5—5 of Fig. 1,

Figure 5ª, a fragment of Fig. 5,

Figure 6, a detail section on line 6—6 of Figure 1,

Figure 7, a detail section on line 7—7 of Fig. 5,

Figure 8, a detail section on line 8—8 of Fig. 1,

Figure 9, a detail section on line 9—9 of Fig. 1, and

Fig. 10, a detail section on line 10—10 of Fig. 1ª.

The rails 11, cross-bars 12, legs 13 and 14 and rails 15 constitute the main framework of the machine. Mounted in brackets 16 at the feeding end of the machine is a shaft 17 upon which rotates pulley or drum 18 having narrow grooves 19 and a wide groove 20, in which grooves run endless narrow bands or wires 21 and a wider band 22. All of these devices, as shown at various points along the machine, may be made of any suitable or convenient material such as cotton, rubber, leather, hemp, steel, etc. in the form of cords or cables, some of which are wider than others but all taking the form of strand-like bodies. These bands pass in turn over pulley 23, which is similar to pulley 18, excepting that it has two additional grooves 24. Pulley 23 rotates in a similar manner to pulley 18 upon shaft 25 which is mounted in brackets 26. The band 22 is equipped with a series of cleats 27 adapted to engage the tiles as they are placed on band 22 and bands 21 and the cleats serve to carry the tiles positively into the cleaning mechanism of the machine. The cleats 27 are so spaced on band 22 that tiles of various standard sizes can be placed upon these belts with ease by the operator, thereby permitting the tiles to be inspected by this same operator. The space between the tiles is later on reduced to nothing as and for the purpose hereinafter described.

For the purpose of protecting the bands 21 and 22 while the tiles are being placed thereon, rails 28 are provided upon which the tiles are placed, the cleats 27 riding over and along said rails as they engage the tile; these rails project above the surface of the bands, as can redily be seen by referring to Fig. 4. Rails 29 are supported on adjustable brackets 29′ provided to guide the tile through the feeding and cleaning mechanism. Brackets 16 are provided with means for adjustment whereby the tension of belts 21 and 22 can be adjusted; the adjusting means here shown consists of screws 30 mounted in brackets 31

attached to frame rails 11, the screws 30 bearing against the bases of the respective brackets 16.

Referring to Figs. 5 and 7, a rotating brush 33 is supported by standards 32. This brush is supported at each end on stubs or shafts 34 which are carried in bearing blocks 35 slidably mounted in standards 32 so that the brushes 33 may be adjusted vertically by means of screws 36; the shafts 34 are provided with collars 37 having on their faces projecting pins 38 for the purpose of driving brush 33. On one of the shafts 34 is mounted a pulley 39. Shafts 34 are retained endwise in bearing blocks 35 by means of collars 40, 41 and 42. For the purpose of renewing brush 33, when it becomes worn, the collar 41 may be loosened and the end of the shaft pulled out of the end of brush 33 after which the brush can be easily removed. A brush 43 is similarly mounted in standards 32, and this brush may be adjusted vertically by means of screws 44. Brush 33 rotates so that it brushes the face of the tile in the opposite direction from that in which the tile is fed through the machine, brush 43 being mounted directly beneath brush 33; this pair of brushes will be referred to hereinafter as the first set of brushes.

Brushes 45 and 46 mounted in standards 47 constitute a second set and they perform similar operations to the first set in a similar manner excepting as hereinafter shown. Brushes 33, 43, 45 and 46 are driven by a common belt 48, which passes over an adjustable tension pulley 49, and is driven from a pulley 50 mounted on a shaft 51 turning in bearings 52 on rails 15 of the framework of the machine.

Loosely splined on shaft 51 is a clutch member 53 adapted to engage a clutch face on a pulley 54 which rotates freely otherwise on shaft 51. Clutch member 53 is moved along the shaft by any convenient means, such as a lever 55. Running in grooves 24 of pulley 23 are two bands 56 which run on and are driven by two narrow pulleys 57 in which are cut grooves 58 for guiding said bands. Pulleys 57 are mounted on and splined to shaft 59 which turns in bearings 50 as seen in Fig. 8, these bearings being mounted on rails 11. Shaft 59 is provided with a sprocket 61 over which runs a chain 62 which is driven by sprocket 63 carried on shaft 51, it being understood that belt gearing or other suitable driving means may be used in place of sprocket gearing.

It will be seen from the foregoing description that all the units so far described are driven and controlled simultaneously through the clutch member 53, and that this much of the mechanism constitutes mainly the feeding end of the machine.

It will also be noted that as the diameter of the grooves in pulleys 18, 23 and 57 is the same, the belts 21, 22 and 56 travel at the same speed.

The reason two sets of brushes are employed is: first, that the top of the face of the tiles is thereby thoroughly brushed to remove foreign matter whether in the form of loose particles or material adhering to the tiles; second, that as the lower brush of the first set of brushes can only come in contact with that part of the bottom of a tile which is exposed between bands 21 and 22, and overhangs bands 21, it becomes necessary that the remaining portion of the bottom of the tile be brushed, which is accomplished by arranging bands 56 so that the unbrushed portion of the tile becomes exposed to the action of the lower brush 46 of the second set of brushes. (See Figs. 5 and 6.)

Tiles of certain sizes and shapes, when placed on the belts 21 and 22, will utilize the greater part of the space between the cleats 27; other tiles of an oblong form, as illustrated in the drawings, are of such a size that two of them can be placed between the cleats.

In handling tiles of oblong shape for the purpose of placing them on the machine they are picked up in pairs, one on top of the other. It becomes necessary, therefore, that the upper one of the pair of tiles be placed behind or caused to follow the lower one. To accomplish this a device is used consisting of a plate 64 suspended by arms 65 from shaft 66. Shaft 66 is supported in brackets 67 and is provided with a horizontally disposed arm 68 upon which is placed in any suitable manner, preferably so as to be readily adjustable, a weight 69; the weight 69 causes arms 65 to bear against pins 70 which act as stops and are mounted in brackets 67; plate 64 is so disposed as to clear a single tile placed upon the belt and to engage the upper of a pair of tiles holding it from any further movement until the lower tile has been carried on ahead by its respective cleat, whereupon it will be deposited on the belt behind the cleat and in advance of the following pair of tiles.

If for any reason the upper tile should stick to the lower tile or be obstructed by any other accidental means from sliding off the lower tile it will swing the plate 64 along with it, raising the weight 69 and attracting the attention of the operator, who may then stop the machine and remove the obstruction, and since the plate 64 is so mounted as to be freely swingable back out of the way no harm is done to the cleats 27 or the belt 22. Tables or plates 71 and 72 are placed above the returning portion of the belts so far described protecting them from injury due to any broken pieces of tile which may fall upon them.

Loosely mounted on shaft 59 and rotating at a slightly lower speed than pulleys 57 and shaft 59 are pulleys 73 and 74 over which are run a series of belts 75 which are retained after

their spacing in grooves 76 and 77. Belts 75 are for the purpose of conveying the tile through a spraying chamber 78 and after performing this function are returned over a series of grooved pulleys 79 and 80 which serve to drive belts 75, these pulleys being splined to shaft 81 which rotates in brackets 82 mounted on the rails 11 of the machine, as seen in Fig. 9. Shaft 81 is driven through a sprocket 83 and a chain or belt 84 which is driven by a sprocket 85, which again may be replaced by belt or other gearing, if preferred. Sprocket 85 is carried on a shaft 86 which rotates in brackets 87 mounted on rails 15.

At one end of the shaft is a main driving pulley 88 which is driven from any convenient means, such means being capable of adjustment as to speed for the purpose of controlling the thickness of glaze as it is applied to the face of the tile. Shaft 86 is provided with a cone or step pulley 89 which drives through belt 90, the corresponding cone pulley 54 which is freely mounted on shaft 51, as previously described. The pulleys 89 and 54 are of such a diameter that any of the positions of belt 90 on pulleys 89 and 54 will drive pulley 54 and the general feeding mechanism at a higher speed than belts 75, this speed being adjustable to take care of various sizes of tile. It will be seen from this that as the tiles while they are carried on belt 75 are traveling at a slower rate than those which are carried on belts 21, 22 and 56, the spaces left between the tile as they are conveyed on belts 21 and 22 are gradually reduced to nothing as the tiles approach the spraying chamber thereby feeding the tiles in close order beneath the spraying devices which are mounted in spraying chamber 78 and later described, so that only the face of the tiles will receive a coating of glaze, and that none will get on the edges of the tile either during or after the tiles are sprayed.

If for any reason a tile or a number of tiles are omitted during the feeding operation the space left between them will allow the spray to fall on the conveyor; the nature of bands or wires used for this purpose is such that the spray will not collect on them but they permit it to fall between and therefore not interfere with the operation of the machine. A cleaning device similar to that illustrated in our co-pending application No. 16,025, dated March 16, 1925 may be installed in this machine to clean bands 75 before they run onto pulleys 73 and 74. The spraying chamber 78 and the spraying devices are preferably similar in all respects to those described in the application above referred to.

Loosely mounted on shaft 81 and between pulleys 79 and 80 are mounted pulleys 91 which are of slightly larger diameter than pulleys 79 and 80 and in the grooves of which run bands 92; bands 92 pass over an idler pulley 93 rotating on shaft 84 mounted in bearings 95 which are bolted to rails 11. Pulley 93 is merely additional means for supporting the bands 92 as they pass over delivery tables 96 and 97. Bands 92 are driven by pulley 98 which is provided with grooves 99 so spaced as to keep the bands in proper alinement. Pulley 98 is splined to shaft 100 which rotates in bearings 101 which are adjustably mounted on rails 11. Shaft 100 is provided with a sprocket or pulley 102 which is driven by a belt or chain 103 from a sprocket or pulley 104 which is carried on shaft 105 rotating in brackets 106 fastened to legs 13 of the frame, said shaft being driven by a cone pulley 107 in a similar manner to the cone pulley 54 by means of belt 108 from a cone pulley 109 mounted on the general drive shaft 86, excepting that no clutch is used. Pulley 107 being smaller than pulley 109 will drive bands 92 at a higher speed than the bands 75, which serves to separate the tiles as they are transferred from bands 75 onto the pulleys 91. The reason pulleys 91 are made larger in diameter than pulleys 79 and 80 is that as the forward edge of each tile comes in contact with pulleys 91 it will on account of their higher rate of speed be dragged off bands 75 and thereby separated from the following tile, permitting the tile to be removed from conveyor bands 92 without disturbing the adjacent tile and in consequence scratching or marring the newly applied coat of glaze.

Fig. 10 illustrates a guard for protecting the hands of the operators against being caught between bands 92 and pulley 98. Plates 110 and 111 are arranged so as to allow the bands to pass through them by having formed in their edges notches or slots 112.

I have shown in Fig. 3 spraying nozzles 113 above the conveyor 75. These nozzles are adjustably supported on an arm 114 having horizontal slots 115 coacting with vertical slots 116 to support the nozzles in different positions as for tiles of different width.

It will be obvious to those skilled in the art that our device may be modified in various respects without departing from the spirit of the invention, and therefore we do not limit ourselves to what is shown in the drawings and described in the specification but only as indicated in the appended claims in which specific terms will be found to occur, which terms are used for clearness of definition and not for limitation except as required by the prior art.

Having thus fully described our said invention, what we claim as new and desire to secure by Letters Patents, is:

1. A machine for treating tiles comprising a chamber, means for creating a fine spray of liquid in the chamber, means for bringing tiles up to the chamber in spaced relation, means for bringing them close together before they pass into the chamber, and means

for passing them through the chamber in juxtaposed relation, substantially as set forth.

2. A machine for treating tiles comprising a chamber, means for creating a fine spray of liquid in the chamber, means for bringing tiles up to the chamber in spaced relation, means for bringing them close together before they pass into the chamber, means for passing them through the chamber in juxtaposed relation, and means for separating them after leaving the chamber, substantially as set forth.

3. A machine as in claim 1, the tile-conveying means including parallel endless strand-like bodies with spaces between them, substantially as set forth.

4. A machine for treating tiles comprising a chamber, means for creating a fine spray of liquid in the chamber, a belt or band for bringing tiles up to the chamber, and a belt or band traveling at a lower speed than said belt or band carrying the tiles through said chamber, substantially as set forth.

5. A machine for treating tiles comprising a chamber, means for creating a fine spray of liquid in the chamber, a belt or band for bringing tiles up to the chamber, a belt or band traveling at a lower speed than said belt or band carrying the tiles through said chamber, and a belt or band traveling faster than the second one for carrying off the treated tiles, substantially as set forth.

6. A machine as in claim 4, each of said belts or bands having spaces to permit free passage of liquid or fragments of tile, substantially as set forth.

7. A machine as in claim 5, each of said belts or bands having spaces to permit free passage of liquid or fragments of tile, substantially as set forth.

8. A machine for treating tiles comprising a chamber, a conveyor for bringing the tiles up to the chamber, means for passing the tiles through the chamber, and conveying means operating at a greater speed than the second one for carrying off the treated tiles, substantially as set forth.

In witness whereof, we have hereunto set our hands at Anderson, Indiana, this 2nd day of March, A. D. nineteen hundred and twenty-five.

LOUIS S. JONES.
GARFIELD W. FISHER.
CARL G. HENRIKSON.