Jan. 18, 1949. P. J. SELGIN 2,459,724

ASTATIC CATHODE-RAY TUBE

Filed Nov. 27, 1946 2 Sheets-Sheet 1

FIG. 1

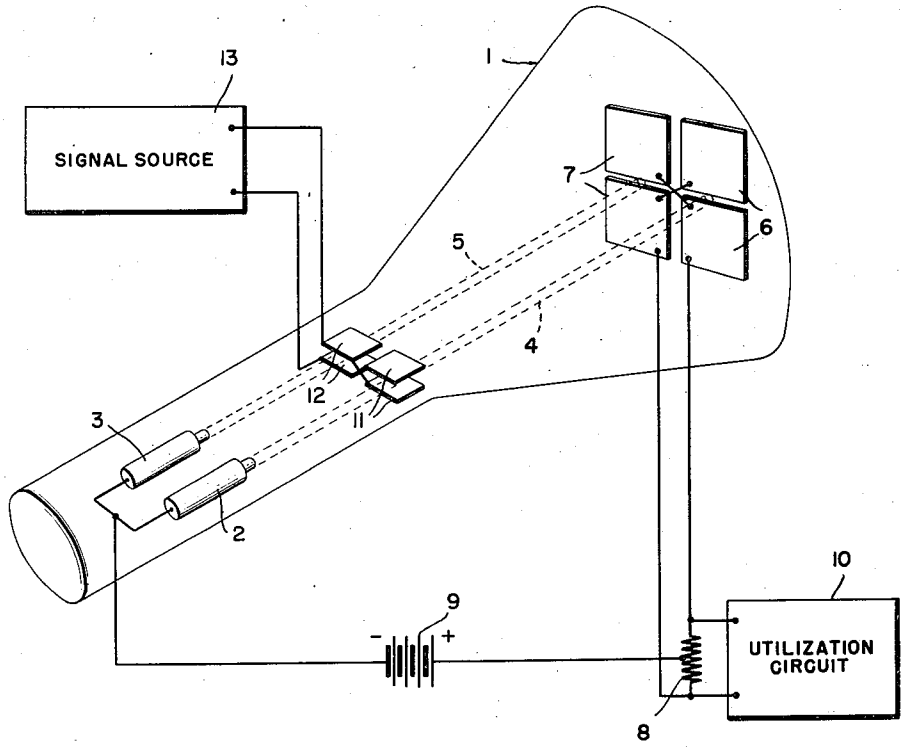

INVENTOR
PAUL J. SELGIN

BY

ATTORNEY

Jan. 18, 1949. P. J. SELGIN 2,459,724

ASTATIC CATHODE-RAY TUBE

Filed Nov. 27, 1946 2 Sheets-Sheet 2

FIG. 2

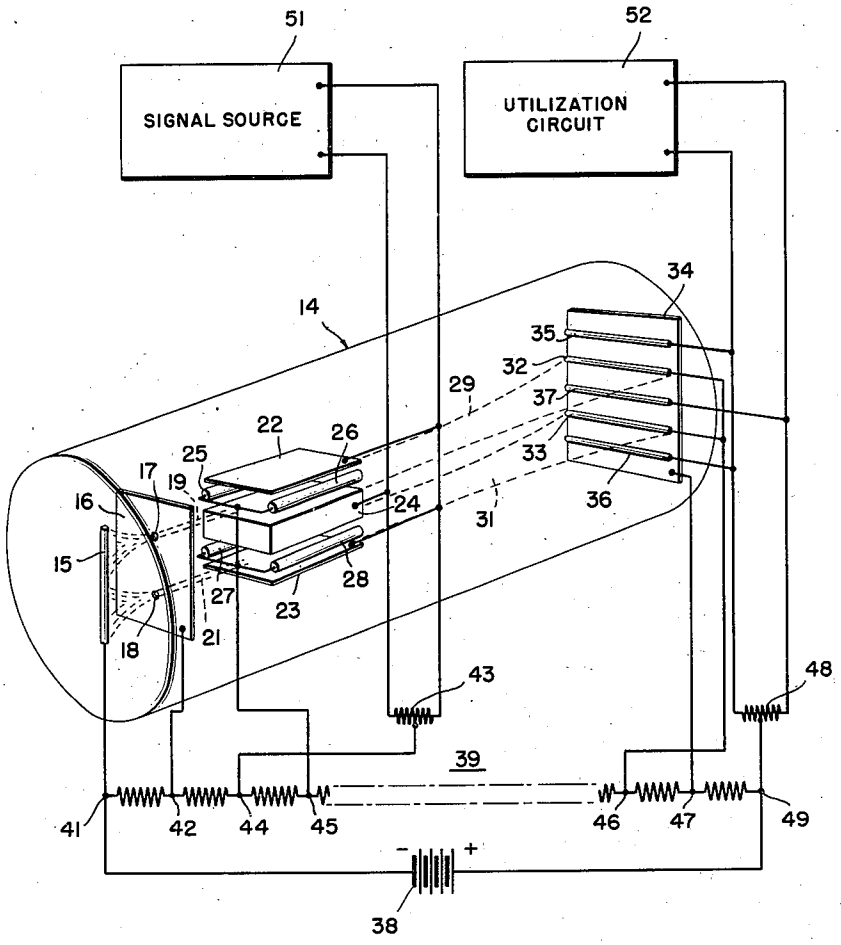

INVENTOR
PAUL J. SELGIN

BY

ATTORNEY

Patented Jan. 18, 1949 2,459,724

UNITED STATES PATENT OFFICE

2,459,724

ASTATIC CATHODE-RAY TUBE

Paul J. Selgin, Fort Wayne, Ind., assignor, by mesne assignments, to Farnsworth Research Corporation, a corporation of Indiana

Application November 27, 1946, Serial No. 712,566

7 Claims. (Cl. 250—27)

1

This invention relates to cathode ray tubes and particularly to devices of this character which are capable of operating independently of the influence of stray fields.

Cathode ray tubes wherein one or more electron beams are deflected over a target electrode have been used for many purposes such as signal modulation, signal detection, etc. Usually in tubes of this character the target electrode has either a particular form or consists of a number of separated parts arranged in a particular manner and over which the one or more electron beams are deflected. Depending upon the amplitude of such deflection, a signal voltage is developed in an output circuit coupled to the target electrode which is representative of the signal by which the beam deflection is controlled.

It is well known, however, that such devices do not always reproduce signals in the output circuit which are completely free from distortion. Usually the greatest signal distortion is caused by a spurious deflection of the beam as a result of its being subjected to stray fields. It is not always possible, and generally it is not convenient, to shield the tube and the electron beam from stray fields.

It is an object of the present invention, therefore, to provide a novel deflection type of cathode ray tube which is capable of operating entirely independently of stray fields whether they are produced within the tube or exterior to it.

In accordance with the present invention, there is provided a cathode ray tube having facilities for generating at least one pair of electron beams. The tube also includes a deflecting system for each beam. Both deflecting systems are subject to control by the signal which it is desired to reproduce in the output circuit. The deflecting systems are so constructed and arranged that signal-controlled deflections of the two beams of each pair are in opposite senses. The tube also includes a target electrode system for each beam. The target electrodes are so constructed and arranged that signal-controlled deflection of the two beams of each pair influences each target electrode in the same manner. The target electrodes are both coupled to the same output circuit in such a manner that they both contribute to the output signal.

For a better understanding of the invention, together with other and further objects thereof, reference is made to the following description, taken in connection with the accompanying drawings and its scope will be pointed out in the appended claims.

2

In the accompanying drawings:

Fig. 1 is a diagrammatic illustration of one illustrative embodiment of the invention; and,

Fig. 2 is a diagrammatic representation of another embodiment of the invention employing a specific form of electron beam and an electron multiplier.

Referring now to Fig. 1 of the drawings, the cathode ray tube is provided with evacuated envelope 1. At one end of the tube, within the envelope, there are provided two electron guns 2 and 3. It will be understood that each electron gun is provided with a cathode source of electrons and is capable of developing a stream of electrons and for directing the electron stream toward a target electrode. In the present case, the target electrode associated with the electron beam 4 comprises a pair of plates 6 which are separated vertically from one another by a relatively narrow gap. Also, there is provided for the electron beam 5, a target electrode comprising a pair of plates 7 which are separated vertically from one another by a relatively narrow gap. The target plates 6 and 7 also are separated horizontally from one another. The spacings between the target electrode plates provide electrical insulation among the plates. The target plate spacing may be effected by an air gap as shown herein, or by any other suitable insulating structure as desired.

In order to obtain optimum results from such a device, it is preferred to couple the target electrodes differentially to the output circuit. The upper and lower plates of each set of target electrodes are cross-connected as shown, and are connected to the terminals of an output circuit impedance device such as a resistor 8. The midpoint of the output circuit resistor is connected to the positive terminal of a source of unidirectional voltage such as a battery 9. The negative terminal of this battery is connected to the cathodes of the electron guns 2 and 3, as indicated, so that the target electrodes are at all times maintained at a positive potential with respect to the cathode electron sources. The terminals of the output circuit resistor 8 may also be coupled to any desired utilization circuit 10.

Between the electron guns and the target electrodes there is mounted within the tube envelope a deflecting system for each of the electron beams 4 and 5. In the present instance, these deflecting systems consist of a pair of horizontal plates 11 associated with the beam 4 and a pair of horizontal plates 12 associated with beam 5. Upper and lower ones of the two pairs of the de-

flection plates 11 and 12 are cross-connected, as shown, and further connected to a signal source 13.

Referring now to the operation of the cathode ray tube embodying the present invention, in the form shown in Fig. 1, it will be understood that the electron guns 2 and 3 operate to project electron beams 4 and 5 through the respective deflecting plates 11 and 12 onto the target electrodes 6 and 7 respectively. A signal voltage of one polarity, derived from the source 13, which, when impressed upon the deflecting plates 12, causes upward deflection of the beam 5, will, by reason of the cross-connection of the plates 11 and 12 cause a downward deflection of the beam 4. If the target electrode plates 6 and 7 are closely spaced, as in the case where class A operation is desired, the upward deflection of the beam 5 will cause fewer electrons to strike the lower plate 7, and more electrons to strike the upper plate 7. At the same time the downward deflection of the beam 4 causes the upper plate 6 to collect fewer electrons, and the lower plate 6 to collect more electrons. The described cross-connection of the target electrode plates connects both of the plates receiving more electrons to the upper terminal of the resistor 8 and connects the two plates receiving fewer electrons to the lower terminal of the resistor 8. Thus, it is seen that the cross-connected target electrode plates aid one another in the production of signal voltages in the output circuit, inasmuch as all signal-produced variations in the electron collection, by these plates, is additive in the output circuit.

It will be obvious that a signal voltage of opposite polarity derived from the source 13 will cause the downward deflection of the beam 5 and the upward deflection of the beam 4, whereby an increased number of electrons are caused to flow to the lower terminal of the resistor 8 and a decreased number to the upper terminal.

The foregoing description of the operation of the illustrated device is predicated on the absence of any stray fields which might affect the deflection of the electron beams. In order to appreciate the advantage of the present arrangement, assume that the electron beams are exposed to the influence of a stray field which causes both beams to be deflected upwardly. If now a signal voltage is impressed upon the deflection plates 11 and 12 of such polarity that the beam 5 is deflected downwardly and the beam 4 is deflected upwardly, it will be shown that the upward deflection of the two beams by the stray field does not introduce any distortion in the signal reproduced in the output circuit. The beam 5 will not be deflected downwardly to as great a degree as it would in the absence of the stray field. Consequently, the increase in the electron collection by the lower plate 7 and the corresponding decrease in the electron collection by the upper plate 7 is less by the degree of difference in the strength of the deflecting field produced by the deflecting plates 12 and the strength of the stray field. On the other hand, the upward deflection of the beam 4 is greater in an amount equal to the sum of the strength of the field produced by the deflecting electrodes 11 and the strength of the stray field. In this case the increase in the electron collection by the upper plate 6 and the corresponding decrease in the electron collection in the lower plate 6 is greater than in the case where no stray field exists. Inasmuch as the differences in the electron collections by the target electrodes 6 and 7 are directly proportional to the strength of the stray field, it is seen that the total collection of the electrons by the lower plate 6 and the upper plate 7 on the one hand, and the upper plate 6 and the lower plate 7 on the other hand is substantially the same as in the case where no stray field exists. The signal voltage developed in the output resistor 8 then is substantially identical to the signal voltage which would be developed in the absence of a stray field.

Obviously, in order to neutralize a device of this character against the effects of stray fields, it is not essential to employ a target electrode of the particular form illustrated and described. A modification of the target electrode of Fig. 1, for example, is one having only an upper plate associated with one electron beam and only a lower plate associated with the other beam. The sensitivity of such a device, however, would be substantially one-half of that having both upper and lower plates associated with both beams.

Referring to Fig. 2 of the drawings, there is shown a modified embodiment of the present invention. The cathode ray tube is provided with an evacuated envelope 14. Adjacent one end of the tube envelope is an electron-emitting cathode 15 of elongated form extending generally in a vertical direction. The cathode may be conditioned for the emission of electrons in any conventional manner, not shown, such as by heating, either directly or indirectly. In front of the cathode there is located electrode 16 which is provided with two substantially circular apertures 17 and 18 in alignment with the cathode. These apertures, when properly energized, in a manner to be described, function to form two pencil-like electron beams 19 and 21 from the electron emission by the cathode.

The tube also is provided with a deflecting system for controlling the direction of the two electron beams. The deflection system in this case comprises upper and lower plates 22 and 23, respectively, arranged in two spaced substantially horizontal planes. The deflecting system also includes a box-like electrode 24 having upper and lower flat surfaces spaced from, and facing, respectively, the upper and lower plates 22 and 23. These electrodes are so located relative to the apertures 17 and 18, that the electron beams 19 and 21 are directed respectively in alignment between the electrodes 22 and 24 on the one hand and electrodes 23 and 24 on the other hand. Also, there is provided a plurality of focusing electrodes, such as a first pair of rods 25 and 26 associated with the upper deflecting system and a second pair of rods 27 and 28 associated with the lower deflecting system. The respective rods of each pair are mounted adjacent the longitudinal edges of the deflecting plates and are generally coextensive therewith. When these focusing electrodes are suitably energized, in a manner to be described, the pencil-like electron beams 19 and 21 are formed respectively into electron sheets 29 and 31 which lie generally in two horizontally placed planes, approximately coinciding with the central axes of the two deflecting systems.

Adjacent the right hand end of the tube envelope 14, there is provided a target electrode structure. In the present illustrative embodiment of the invention, this structure comprises a two-stage electron multiplier. Associated with the electron sheet 29 and in substantially undeflected alignment therewith, there is provided a rod-like secondary electron-emissive electrode 32. Similarly, there is provided a second rod-like

secondary electron-emissive electrode 33 in substantial alignment with the undeflected electron sheet 31. In back of the electrodes 32 and 33, there is mounted a substantially vertical plate electrode 34, the front surface of which is conditioned for the liberation of secondary electrons. The target electrode structure additionally includes a pair of rod-like electron collecting electrodes 35 and 36 located respectively, above and below the secondary electron emitting electrodes 32 and 33. Another rod-like electron collecting electrode 37 is mounted substantially mid-way between the secondary electron emitting electrodes 32 and 33.

The electrode structures of the tube are connected to suitable sources of voltage and to the signal source and utilization circuit in the following manner. There may be provided a source of unidirectional voltage, such as a battery 38. In order to suitably distribute the voltages derived from this battery among the various tube electrodes, there also may be provided a voltage divider 39 comprising a series connection of a plurality of impedance elements, such as resistors. The cathode 15 is connected to the negative terminal 41 of the voltage divider and the beam-forming electrode 16 is connected to a more positive point 42. The upper and lower deflecting plates 22 and 23 are connected together and to one terminal of an input resistor 43, the other terminal of which is connected to the center deflecting electrode 24. An intermediate, preferably the center, point of the input resistor 43 is connected to a still more positive voltage divider point 44. The line-focusing rods 25, 26, 27 and 28 are connected to a higher positive potential point 45. The secondary electron emitting rod electrodes 32 and 33 are connected to a still more positive point 46 and the secondary electron-emitting plate 34 is connected to an even higher positive potential point 47. The upper and lower collecting electrodes 35 and 36 are connected together and to one terminal of an output resistor 48, the other terminal of which is connected to the center collecting electrode 37. The resistor 48 is provided with an intermediate tap, preferably at the mid-point thereof, which is connected to the positive terminal 49 of the voltage divider 39.

A source of signals 51 is connected to the terminals of the input resistor 43 so that suitable voltages, varying in accordance with the signals, are impressed upon the beam-deflecting system. A utilization circuit 52 is coupled to the terminals of the output resistor 48 so as to receive the signal voltages derived from the electron collecting electrodes.

Referring now to the operation of the modification of the invention shown in Fig. 2, consideration first will be given to the formation of the electron beam. The electrons emitted by the cathode 15 are drawn through apertures 17 and 18 of the plate 16 by reason of this plate's more positive potential relative to the cathode. The electrons emerging from the apertures 17 and 18, are in the form of relatively small pencil-like beams 19 and 21. These beams are directed respectively through the upper and lower sets of deflecting elements. By reason of the described connection of the deflecting elements and the focusing rods adjacent thereto, all of the deflecting electrodes are at negative potentials relative to the positive potentials of the focusing rods 25, 26, 27 and 28. Each of the electron beams 19 and 21 therefore, in passing through the deflecting system, is spread horizontally under the influence of the positive focusing rods. As a consequence, these beams emerge from the deflecting system as relatively thin horizontal electron sheets 29 and 31.

The impingement of the electron sheets 29 and 31 respectively, upon the secondary electron-emitting electrodes 32 and 33, effects the liberation of a multiplied number of secondary electrons. These secondary electrons are drawn toward the plate electrode 34, the impingement upon which produces a greater number of secondary electrons. These secondary electrons in turn are drawn to, and collected by, the electrodes 35, 36 and 37. The numbers of electrons collected by these respective electrodes are dependent upon the manner in which the electron sheets impact the target electrodes 32 and 33. For example, the deflection of the electron stream 29 upwardly, causes a greater number of electrons to be collected by the collecting electrode 35 than by the center electrode 37. Similarly, a downward deflection of the electron stream 31 causes the lower collecting electrode 36 to receive a greater number of electrons than are received by the center electrode 37. Conversely, a downward deflection of the electron stream 29 and an upward deflection of the electron stream 31, causes a greater number of electrons from the respective streams to be collected by the central electrode than by either the upper or lower collecting electrodes 35 and 36 respectively.

The deflections of the electron stream are under the control of the signals derived from the source 51. Assume that a given signal derived from this source is impressed upon the input resistor 43 in such a manner that the upper and lower deflecting plates 22 and 23 respectively, are of positive potential relative to the center electrode 24. In this case the electron stream 29 is deflected upwardly and the electron stream 31 is deflected downwardly. As a result, the collecting electrodes 35 and 36 receive from the respective beams, more electrons than are received by the center collecting electrode 37. A signal voltage is developed in the output resistor 48 of such a character that the right-hand terminal of the resistor is more positive than the left-hand terminal.

If now a signal of opposite polarity, derived from the source 51, is impressed upon the input resistor 43, the center deflecting electrode 24 is positive relative to the upper and lower deflecting plates 22 and 23 respectively. In this case the electron stream 29 is deflected downwardly and the electron stream 31 is deflected upwardly. The central collecting electrode 37 therefore, will receive more electrons from the two streams than the upper and lower collecting electrodes 35 and 36, respectively. A voltage of opposite polarity is thereby developed by the output resistor 48.

As in the previously described embodiment of the invention, the deflection of the electron beams in opposite directions under the control of intelligence signals renders the device substantially independent of the effects of stray fields. Any stray fields which may cause deflection of the electron beams will move the beams in the same direction. In view of the previously given detailed description of the manner in which a tube of this character operates to eliminate distortion of the signals derived therefrom, it should be obvious that in the present instance the beam deflections from fields other than those produced

under the control of the input signals, are substantially nullified in the output circuit.

While there has been described what is at present considered the preferred embodiment of the invention, it will be obvious to those skilled in the art that various changes and modifications may be made therein without departing from the invention, and it is, therefore, aimed in the appended claims to cover all such changes and modifications as fall within the true spirit and scope of the invention.

What is claimed is:

1. Signaling apparatus comprising, a source of signals, an output circuit for said signals, a cathode ray device comprising means for producing two electron beams, deflecting systems located adjacent to the respective paths of said beams and connected to said signal source in a manner to cause said beams to be deflected in response to said signals to the same degree but in opposite senses, an electron collecting system including two target electrodes located in the respective paths of said electron beams, and means coupling said target electrodes differentially to said output circuit in a manner whereby signal-produced variations in the electron collection by said electron collecting system is additive in said output circuit.

2. Signaling apparatus comprising, a source of signals, an ouput circuit for said signals, a cathode ray device comprising means for producing two independent electron beams, two deflecting systems located adjacent to the respective paths of said beams and connected in opposite polarity to said signal source, whereby to cause said beams to be deflected in response to said signals to the same degree but in opposite senses, and two electron collecting systems located in the respective paths of said electron beams and connected in opposite polarity to said output circuit, whereby signal-produced variations in the electron collection by said collecting systems is additive in said output circuit.

3. Signaling apparatus comprising, a source of signals, an output circuit for said signals, a cathode ray device comprising two electron guns for producing two independent electron beams, two pairs of deflecting plates similarly located adjacent to the respective paths of said beams and connected in opposite polarity to said signal source, whereby to cause said beams to be deflected in response to said signals to the same degree but in opposite senses, and two pairs of co-planar electron collecting anode plates located in the respective paths of said electron beams and connected in opposite polarity to said output circuit, whereby signal-produced variations in the electron collection by said anode plates is additive in said output circuit.

4. Signaling apparatus comprising, a source of signals, an output circuit for said signals, a cathode ray device comprising two electron guns for producing two independent electron beams, two pairs of deflecting plates horizontally located adjacent to the respective paths of said beams and connected in opposite polarity to said signal source, whereby to cause said beams to be deflected vertically in response to said signals to the same degree but in opposite senses, and two pairs of electron collecting anode plates vertically located in the respective paths of said electron beams and connected in opposite polarity to said output circuit, whereby signal-produced variations in the electron collection by said anode plates is additive in said output circuit.

5. Signaling apparatus comprising, a source of signals, a utilization circuit for said signals, a cathode ray device comprising means for producing two electron beams, two deflecting systems located adjacent to the respective paths of said beams and connected in opposite polarity to said signal source, whereby to cause said beams to be deflected oppositely in response to said signals, and two secondary electron-emissive electrodes located in the respective paths of said electron beams and coupled in opposite polarity to said utilization circuit, whereby the signal-controlled variations in the deflections of said beams is additive in said utilization circuit.

6. Signaling apparatus comprising, a source of signals, a utilization circuit for said signals, a cathode ray device comprising means for producing two electron beams, two deflecting systems comprising three plates horizontally located adjacent to the respective paths of said beams with the center one of said plates being common to both deflecting systems, means for connecting the upper and lower plates of each of said deflecting systems in opposite polarity to said signal source, whereby to cause said beams to be deflected vertically in response to said signals to the same degree but in opposite senses, a secondary electron-emissive target electrode located in the path of each of said electron beams, two electron collecting systems comprising three electrodes, said collecting systems being coupled in opposite polarity to said utilization circuit, whereby signal-produced variations in the electron collection by said two collecting systems is additive in said utilization circuit.

7. Signaling apparatus comprising, a source of signals, a utilization circuit for said signals, a cathode ray device comprising means for producing two electron beams, two deflecting systems located adjacent to the respective paths of said beams and connected in opposite polarity to said signal source, whereby to cause said beams to be deflected oppositely in response to said signals, two focusing systems located adjacent to the respective deflecting systems and energized in opposite polarity to said deflecting systems, whereby to convert said electron beams into electron sheets, and two target electrodes located in the respective paths of said electron sheets, said target electrodes each having one dimension at least as great as the width of said electron sheets and being coupled to said utilization circuit in a manner whereby signal-produced variations in the electron impingement upon said two target electrodes is additive in said utilization circuit.

PAUL J. SELGIN.

REFERENCES CITED

The following references are of record in the file of this patent:

UNITED STATES PATENTS

Number	Name	Date
2,170,944	Glass et al.	Aug. 29, 1934
2,183,634	Zoorykin	Dec. 19, 1939
2,276,359	Van Arderne	Mar. 17, 1942
2,402,758	Leverenzy	June 25, 1946