No. 700,238. Patented May 20, 1902.

G. F. READ.

DELIVERY MECHANISM.

(Application filed June 1, 1901.)

(No Model.) 2 Sheets—Sheet 1.

Fig. 1

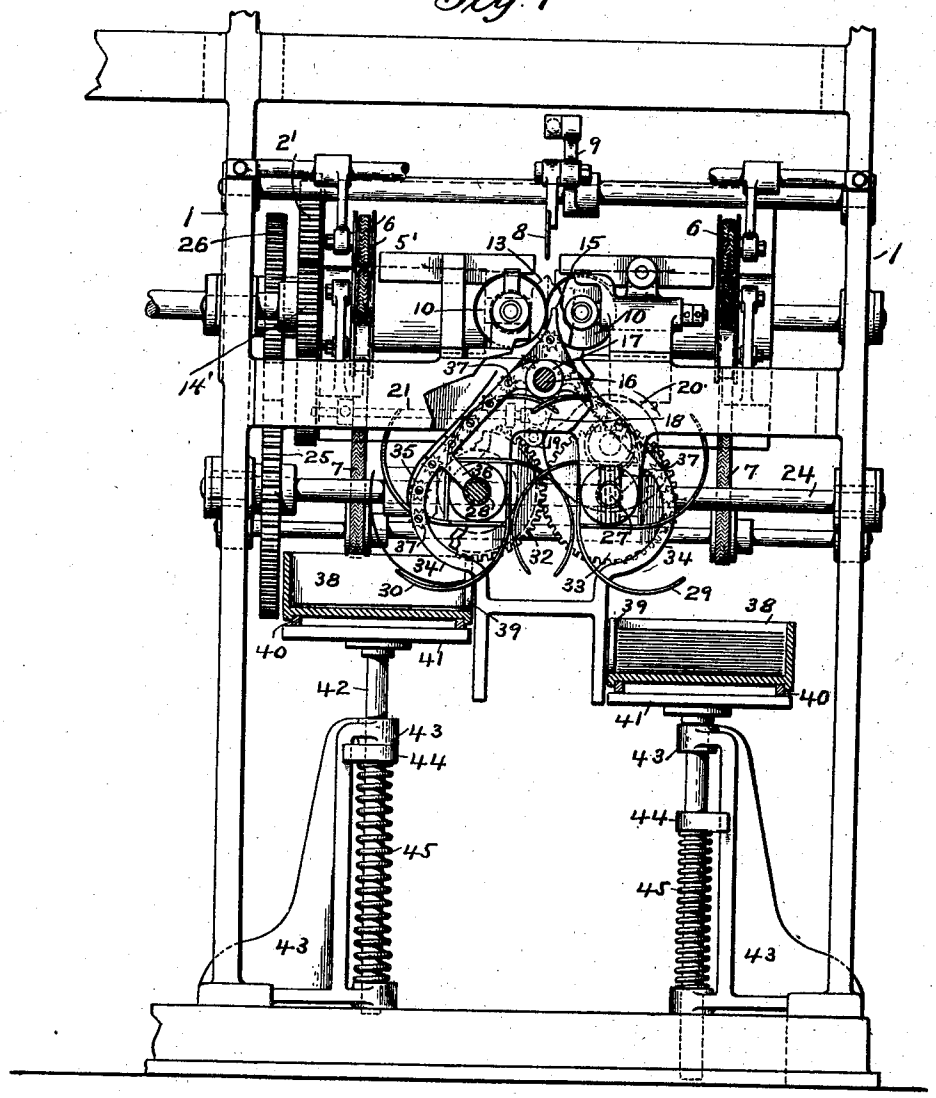

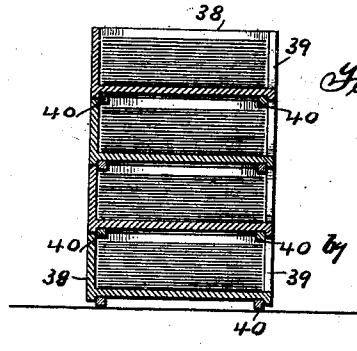

Fig. 3.

Attest:
G. A. Rafter
Am Proctor

Inventor:
George F. Read
Philipp. Sawyer Rice
& Kennedy

THE NORRIS PETERS CO., PHOTO-LITHO., WASHINGTON, D. C.

No. 700,238. Patented May 20, 1902.

G. F. READ.

DELIVERY MECHANISM.

(Application filed June 1, 1901.)

(No Model.) 2 Sheets—Sheet 2.

Fig. 2.

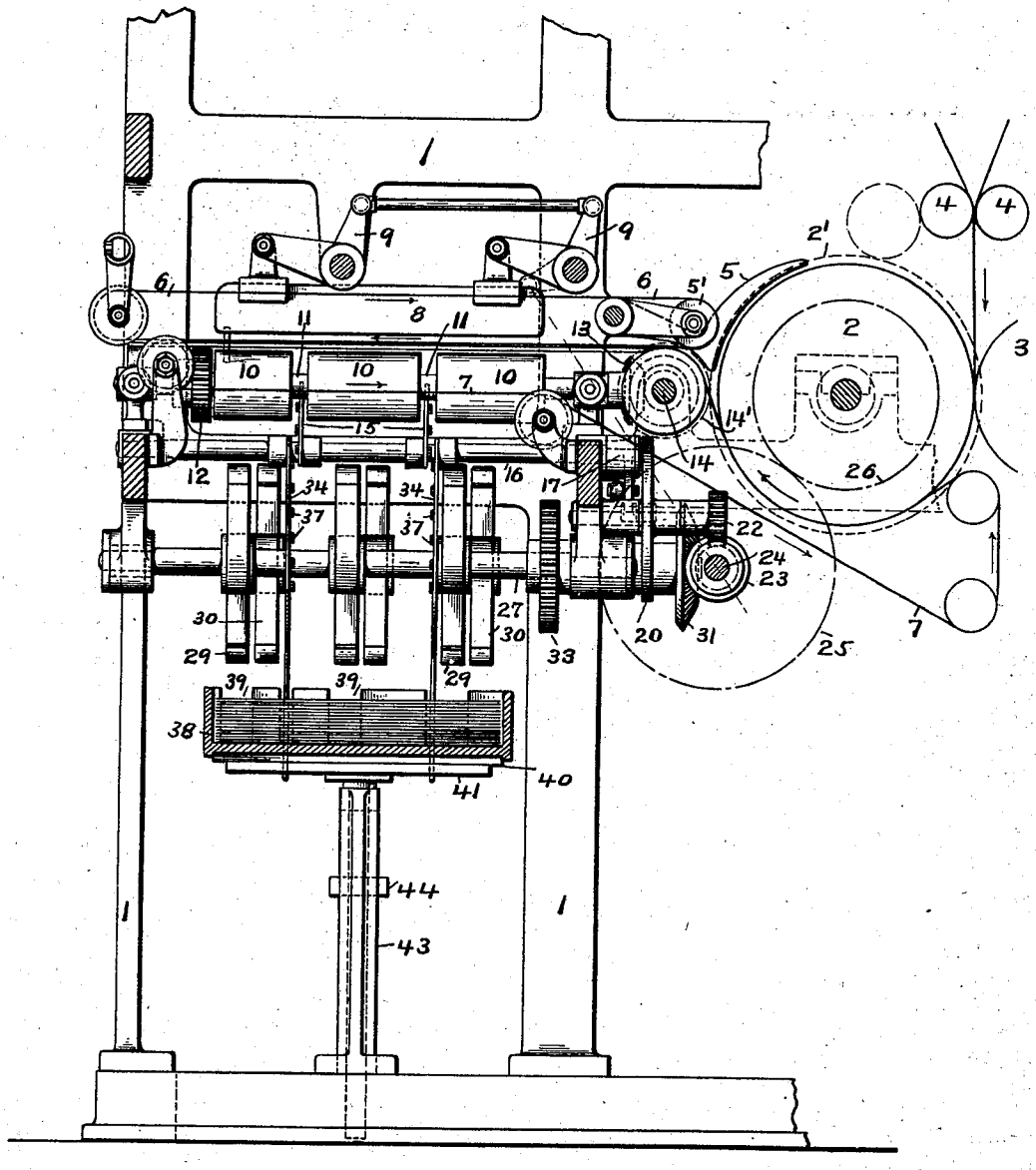

Attest:
G. S. Rafter
Cw Proctor

Inventor:
by George F. Read
Philipp, Sawyer, Rice & Kennedy
Attys

THE NORRIS PETERS CO., PHOTO-LITHO., WASHINGTON, D. C.

UNITED STATES PATENT OFFICE.

GEORGE F. READ, OF NEW YORK, N. Y., ASSIGNOR TO ROBERT HOE, OF NEW YORK, N. Y.

DELIVERY MECHANISM.

SPECIFICATION forming part of Letters Patent No. 700,238, dated May 20, 1902.

Application filed June 1, 1901. Serial No. 62,753. (No model.)

To all whom it may concern:

Be it known that I, GEORGE F. READ, a citizen of the United States, residing at New York, county of Kings, and State of New York, have invented certain new and useful Improvements in Delivery Mechanisms, fully described and represented in the following specification and the accompanying drawings, forming a part of the same.

This invention relates to certain improvements in deliveries for printing-machines.

In Patent No. 664,585, granted to Robert Hoe December 25, 1900, as the assignee of Oscar Roesen, a delivery for printing-machines is described in which the sheets are delivered into boxes or trays, the purpose of the construction being to prevent the product from becoming smutted or rubbed in the delivery and from being finger-marked and to give the separate products an opportunity to dry without superposing large bunches of them directly upon each other, by which offsetting due to the weight of the superposed bunches of products is prevented.

The present invention has for its object to improve and simplify the construction of the delivery described in said patent and also to increase its capacity.

With this and other objects in view the invention consists in certain constructions and in certain parts, improvements, and combinations, as will be hereinafter fully described and then specifically pointed out in the claims hereunto appended.

In the accompanying drawings, in which like characters of reference indicate the same parts, Figure 1 is a front view of a delivery mechanism embodying the invention, certain parts being shown in section. Fig. 2 is a side view of the construction shown in Fig. 1, certain parts being also shown in section. Fig. 3 is a detail sectional view of a pile of filled trays.

Referring to said drawings, 1 indicates that portion of the frame of a printing-machine in which the delivery mechanism is mounted. The usual cutting-cylinders are indicated at 2 and 3, the webs passing to these cylinders from the usual nipping-rolls 4. After leaving the cylinder 2 the cut sheets are caused, by means of a guide 5, a guide-roll 5′, and tapes 6 7, to pass beneath a folding-blade 8, said blade being carried on and operated by bell-cranks 9. The devices so far described in connection with the folding-rolls, to be hereinafter described, form a sheet-advancing means, the construction of the several devices being well known in the art. These devices may be replaced by any other suitable form of sheet-advancing means, as the invention does not in any way depend upon the particular character of sheet-advancing means employed.

The folding-blade 8 operates to tuck the product, which may be a sheet or a pack of collected sheets, into the bite of folding-rolls, said rolls preferably consisting of spaced sections 10, mounted on shafts 11. These shafts 11 are intergeared by means of gears 12, and one of said shafts is provided with a bevel-gear 13, which is in mesh with a similar gear on a shaft 14. This shaft 14 carries a gear 14′, (see Fig. 1,) which is in mesh with a gear 2′ (see Fig. 1 and dotted lines in Fig. 2) on the shaft of the cutting-roll 2.

A plurality of deliveries is employed to receive the product from the folding-rolls. While the number of these deliveries may vary, in the preferred construction two deliveries will be employed, and devices are preferably provided by which a number of sheets in succession will be directed to one delivery and a number of sheets in succession to the other delivery.

The devices by which the sheets are directed first to one delivery and then to the other may be varied in construction. As shown, a switch is employed for this purpose. In the construction shown this switch consists of two triangular members 15, said members being mounted on a shaft 16, located beneath the folding-rolls, the members 15 being so arranged that their apexes extend into the space between the sections 10 of the folding-rolls. It is apparent that by oscillating the shaft 16 the triangular members 15 will be so moved that the product from the rolls will be delivered first upon one side of said members and then upon the other.

While the shaft 16 might be rocked by hand, automatic means will preferably be provided for giving it its movement at the de-

sired time, which, as before stated, will preferably be after a number of papers has been sent to one delivery. Any suitable form of automatic means may be utilized for producing the rocking movement of the shaft. As shown, the shaft is provided with a collar 17, to which is connected an arm 18. This arm 18 carries a bowl 19, which is held against the periphery of a cam 20 by means of a spring-rod 21 (see dotted lines in Fig. 1) of ordinary construction. The cam 20 is driven by means of a worm-gear 22, said gear meshing with a worm 23, which is mounted on a shaft 24, suitably supported in the frame of the machine. This shaft is provided with a gear 25, said gear being in mesh with a gear 26, (see Fig. 1 and dotted lines in Fig. 2,) mounted on the shaft of the roll 2. The worm-gearing described drives the cam 20 at the desired rate of speed in order to rock the shaft 16 and throw the switch after any desired number of papers has been delivered.

The deliveries which receive the product from the folding-rolls and switch may be of any desired construction. Preferably, however, they will be S-flys of well-known construction. In the machine shown the fly-shafts are marked 27 and 28, the shaft 27 carrying a set of fly-fingers 29 and the shaft 28 carrying a similar set of fingers 30. The set of fingers 29 is staggered with respect to the set of fingers 30, and the shafts are so located that as the fly-fingers revolve the fingers of one set pass between the fingers of the other set. By this arrangement it is possible to bring the centers of the flys close together, thereby making the incline down which the products travel from the folding-rolls to the deliveries a steep one, thus insuring a better delivery than would be the case if the incline were less steep.

The fly-shafts may be driven in any desired manner. As shown, the shaft 28 is provided with a bevel-gear 31, which meshes with a bevel-gear on the shaft 24, and this shaft 28 is further provided with a gear 32, which meshes with a gear 33 on the shaft 27, the two fly-shafts being thus intergeared.

Suitable guides are provided by which the products after passing the switch are directed to the flies. These guides may be variously constructed and arranged. While, furthermore, guides which are entirely independent of each other might be used in connection with each fly in the preferred construction, a plurality of frames 34 are provided, these frames being preferably hung on the shaft 16. The sides of these frames are arranged so as to give the product a substantially straight path of travel from the point where it leaves the switch down to a point just in advance of where the sheet meets the fingers of the fly. At this point the sides are curved inward sharply, as shown at 35, the sides being then given a straight drop, so as to form a stop for the head of the sheet. Projections 36 are or may be provided, which extend integrally from the frames to the shafts of the flys, thus bracing the frames against sidewise movement. In order to prevent marking or smearing the sheets, serrated wheels 37 are or may be mounted on the switch and on the frames.

While the deliveries might deposit the sheets on any desired receiver, boxes or trays will preferably be provided, which are arranged to receive a definite number of sheets, so that these boxes when filled may be removed and piled one upon the other, thus giving the product a chance to dry without subjecting each pack of sheets to the weight of the packs of sheets above them. These trays may be variously constructed. Preferably, however, they will be in the form of boxes 38, each box having one of its sides cut away, as at 39. The bottoms of the boxes are further preferably provided with strips 40, which extend below the sides of the boxes and are slightly shorter than the outside width of the boxes. When the boxes or trays are piled one upon the other, as shown in Fig. 3, the strips of each box will enter the mouth of the box below, and thus the pile of boxes will be held from slipping sidewise. The boxes may thus be piled to any desired height without danger of having the pile upset.

Any suitable means may be provided for supporting the boxes. As shown, however, these boxes rest upon supporting-tables 41, one of these tables being provided for each delivery. These tables have downward-projecting stems 42, which pass through brackets 43, each of these stems having a collar 44 secured to it, and a spring 45 surrounds each stem and bears against the collar. The tension of these springs is so adjusted that the piling of the sheets in the boxes causes each box to descend.

By providing the boxes with the recesses 39 it will be seen that the sets of fly-fingers can pass through the recesses and deposit each sheet close to the sheet below it, thus avoiding any fluttering action, such as would occur if the sheets were dropped by the fly at any considerable distance above the point where they come to rest.

The operation of the machine, briefly stated, is as follows: Assuming the switch to be set in the position shown in Fig. 1, sheets will be delivered to the set of fingers 30, and by these fingers deposited in one of the trays 39 until this tray is filled or has received the predetermined number of sheets. As the last one of the predetermined number of sheets to be deposited in the tray passes the switch 15 the shaft 16 is rocked by the cam and the switch thrown. The sheets now pass to the other set of fly-fingers, and by these fingers are deposited in a tray which has been placed on the receiving-table to receive them. While the sheets are passing to this tray, the first tray is removed and piled upon the preceding tray, a fresh tray being placed in posi-

tion by the operator to receive the sheets which will be delivered to it as soon as the switch is again thrown. By arranging the switch as described, so as to cause it to deliver a plurality of papers to one tray and then a plurality of papers to the other tray, time is given to remove the tray which has been filled and to replace it by an empty one while the other tray is being filled by the machine.

While the devices which have been described are effective for the purposes set forth, it is to be understood that the invention may be carried into effect by other devices which vary widely from those which have been described. The invention is not, therefore, to be limited to the specific mechanism shown and described.

What is claimed is—

1. The combination with sheet-advancing means, of a plurality of deliveries, a switch, and means for setting the switch so as to cause a plurality of sheets to be directed in succession to one delivery and then a plurality of sheets in succession to another delivery, substantially as described.

2. The combination with sheet-advancing means, of a plurality of deliveries, a switch, and means for automatically setting the switch so as to cause a plurality of sheets to be directed in succession to one delivery and then a plurality of sheets in succession to another delivery, substantially as described.

3. The combination with sheet-advancing means, of a plurality of deliveries, a switch, means for setting the switch so as to cause a plurality of sheets to be directed in succession to one delivery and then a plurality of sheets in succession to another delivery, and a plurality of receiving-trays capacitated for use with any delivery, substantially as described.

4. The combination with sheet-advancing means, of a plurality of deliveries, a switch, means for automatically setting the switch so as to cause a plurality of sheets to be directed in succession to one delivery and then a plurality of sheets in succession to another delivery, and a plurality of receiving-trays capacitated for use with any delivery, substantially as described.

5. The combination with sheet-advancing means, of a plurality of deliveries, each of said deliveries including a rotating fly, a switch, and means for setting the switch so as to cause a plurality of sheets to be directed in succession to one fly and then a plurality of sheets in succession to another fly, substantially as described.

6. The combination with sheet-advancing means, of a plurality of deliveries, each of said deliveries including a rotating fly, a switch, and means for automatically setting the switch so as to cause a plurality of sheets to be directed in succession to one fly and then a plurality of sheets in succession to another fly, substantially as described.

7. The combination with sheet-advancing means, of a plurality of deliveries, each of said deliveries including a rotating fly, a switch, means for setting the switch so as to cause a plurality of sheets to be directed in succession to one fly and then a plurality of sheets in succession to another fly, and a plurality of receiving-trays capacitated for use with any delivery, substantially as described.

8. The combination with sheet-advancing means, of a plurality of deliveries, each of said deliveries including a rotating fly, a switch, means for automatically setting the switch so as to cause a plurality of sheets to be directed in succession to one fly and then a plurality of sheets in succession to another fly, and a plurality of receiving-trays, capacitated for use with any delivery, substantially as described.

9. The combination with sheet-advancing means, of a pair of shafts, a set of fly-fingers on each shaft, the fingers of one set being staggered with relation to the other set and the shafts being so mounted that the fingers of each set pass between the fingers of the other set, and a switch for directing the sheets from the sheet-advancing means to the flies, substantially as described.

10. The combination with sheet-advancing means, of a pair of shafts, a set of fly-fingers on each shaft, the fingers of one set being staggered with relation to the other set and the shafts being so mounted that the fingers of each set pass between the fingers of the other set, a switch for directing the sheets from the sheet-advancing means to the fly-fingers, and means for setting the switch so that it will deliver a plurality of sheets in succession to one set of fly-fingers and then a plurality of sheets in succession to the other set of fly-fingers, substantially as described.

11. The combination with sheet-advancing means, of a pair of shafts, a set of fly-fingers on each shaft, the fingers of one set being staggered with relation to the other set and the shafts being so mounted that the fingers of each set pass between the fingers of the other set, a switch for directing the sheets from the sheet-advancing means to the fly-fingers, and means for automatically setting the switch so that it will deliver a plurality of sheets in succession to one set of fly-fingers and then a plurality of sheets in succession to the other set of fly-fingers, substantially as described.

12. The combination with sheet-advancing means, of a pair of shafts, a set of fly-fingers on each shaft, the fingers of one set being staggered with relation to the other set and the shafts being so mounted that the fingers of each set pass between the fingers of the other set, a switch for directing the sheets from the sheet-advancing means to the fly-fingers, and a plurality of receiving-trays capacitated for use with either set of fingers, substantially as described.

13. The combination with sheet-advancing

means, of a pair of shafts, a set of fly-fingers on each shaft, the fingers of one set being staggered with relation to the other set and the shafts being so mounted that the fingers of each set pass between the fingers of the other set, a switch for directing the sheets from the sheet-advancing means to the fly-fingers, means for setting the switch so that it will deliver a plurality of sheets in succession to one set of fly-fingers and then a plurality of sheets in succession to the other set of fly-fingers, and a plurality of receiving-trays capacitated for use with either set of fingers, substantially as described.

14. The combination with sheet-advancing means, of a pair of shafts, a set of fly-fingers on each shaft, the fingers of one set being staggered with relation to the other set and the shafts being so mounted that the fingers of each set pass between the fingers of the other set, a switch for directing the sheets from the sheet-advancing means to the fly-fingers, means for automatically setting the switch so that it will deliver a plurality of sheets in succession to one set of fly-fingers and then a plurality of sheets in succession to the other set of fly-fingers, and a plurality of receiving-trays capacitated for use with either set of fingers, substantially as described.

15. The combination with sheet-advancing means, of a plurality of deliveries, each delivery including a rotating fly, a guide coöperating with each fly, serrated wheels loosely mounted on the guides, and a switch operating to deliver sheets to the flies, substantially as described.

16. The combination with sheet-advancing means, of a plurality of deliveries, each delivery including a rotating fly, a guide coöperating with each fly, serrated wheels loosely mounted on the guides, and a switch operating to deliver sheets to the flies, said switch having serrated wheels mounted thereon, substantially as described.

17. The combination with sheet-advancing means, of a plurality of deliveries, each delivery including a rotating fly, a guide coöperating with each fly, serrated wheels loosely mounted on the guides, a switch operating to deliver sheets to the flies, said switch having serrated wheels mounted thereon, and means for setting the switch so as to deliver a plurality of sheets in succession to one fly and a plurality of sheets in succession to another fly, substantially as described.

18. The combination with sheet-advancing means, of a plurality of deliveries, each delivery including a rotating fly, a guide coöperating with each fly, serrated wheels loosely mounted on the guides, a switch operating to deliver sheets to the flies, said switch having serrated wheels mounted thereon, and means for automatically setting the switch so as to deliver a plurality of sheets in succession to one fly and a plurality of sheets in succession to another fly, substantially as described.

19. The combination with sheet-advancing means, of a switch coöperating therewith, said switch being provided with serrated wheels, substantially as described.

20. The combination with sheet-advancing means, of a shaft, a switch mounted on said shaft, a pair of fly-deliveries, a plurality of frames, the sides of which form guides to direct the product from the switch to the deliveries, a cam for rocking the shaft to set the switch so that it will deliver to either delivery, and means for causing the cam to come into operation and set the switch after a predetermined number of papers in succession have been directed to one delivery, substantially as described.

21. The combination with sheet-advancing means, of a shaft, a switch mounted on said shaft, a pair of fly-deliveries, a plurality of frames, the sides of which form guides to direct the product from the switch to the deliveries, a cam for rocking the shaft to set the switch so that it will deliver to either delivery, means for causing the cam to come into operation and set the switch after a predetermined number of papers in succession have been directed to one delivery, and a plurality of receiving-trays capacitated for use with either delivery, substantially as described.

22. The combination with sheet-advancing means including a pair of sheet-directing rolls, of a switch coöperating with said rolls, a shaft on which the switch is mounted, a pair of fly-shafts located below the switch-shaft, a set of fly-fingers mounted on each shaft, the fingers of one set being staggered with relation to the fingers of the other set and the shafts being so mounted that the fingers of each set pass between the fingers of the other set, a plurality of frames mounted on the switch-shaft, the sides of said frames acting as guides to direct the products from the switch to the flies, and means for rocking the switch-shaft so as to cause the switch to deliver a number of products in succession to one set of fly-fingers and then a number of products in succession to the other set of fly-fingers, substantially as described.

23. The combination with sheet-advancing means including a pair of sheet-directing rolls, of a switch coöperating with said rolls, a shaft on which the switch is mounted, a pair of fly-shafts located below the switch-shaft, a set of fly-fingers mounted on each shaft, the fingers of one set being staggered with relation to the fingers of the other set and the shafts being so mounted that the fingers of each set pass between the fingers of the other set, a plurality of frames mounted on the switch-shaft, the sides of said frames acting as guides to direct the products from the switch to the flies, means for rocking the switch-shaft so as to cause the switch to deliver a number of products in succession to one set of fly-fingers and then a number of products in succession to the other set of fly-fingers, and a plurality

of receiving-trays capacitated for use with either delivery, substantially as described.

24. The combination with a set of fly-fingers, of a yieldingly-mounted table, and a receiving-tray mounted on said table, one side of the tray being cut away so as to permit the fingers to pass through it in delivering the sheet, substantially as described.

25. The combination with a pair of rolls, of a shaft mounted beneath the rolls, a switch supported by the shaft, a pair of fly-shafts mounted beneath the switch-shaft, a set of fly-fingers mounted on each fly-shaft, the fingers of one shaft being staggered with relation to the fingers of the other shaft and the shafts being so mounted that the fingers of each set pass between the fingers of the other set, frames supported on the switch-shaft, the sides of said frames acting as guides to direct the product from the switch to the fly-frames, means for rocking the switch-shaft so as to cause the switch to deliver a number of papers first to one set of fingers and then to the other set, and a pair of yielding supports one for each fly, substantially as described.

26. The combination with a pair of rolls, of a shaft mounted beneath the rolls, a switch supported by the shaft, a pair of fly-shafts mounted beneath the switch-shaft, a set of fly-fingers mounted on each fly-shaft, the fingers of one shaft being staggered with relation to the fingers of the other shaft and the shafts being so mounted that the fingers of each set pass between the fingers of the other set, frames supported on the switch-shaft, the sides of said frames acting as guides to direct the product from the switch to the fly-fingers, means for rocking the switch-shaft so as to cause the switch to deliver a number of papers first to one set of fingers and then to the other, a pair of yielding supports one for each fly, and a plurality of receiving-trays capacitated for use with either support, substantially as described.

27. The combination with a pair of rolls, of a shaft mounted beneath the rolls, a switch supported by the shaft, a pair of fly-shafts mounted beneath the switch-shaft, a set of fly-fingers mounted on each fly-shaft, the fingers of one shaft being staggered with relation to the fingers of the other shaft and the shafts being so mounted that the fingers of each set pass between the fingers of the other set, frames supported on the switch-shaft, the sides of said frames acting as guides to direct the product from the switch to the fly-fingers, means for rocking the switch-shaft so as to cause the switch to deliver a number of papers first to one set of fingers and then to the other, a pair of yielding supports, one for each fly, and a plurality of receiving-trays, each tray being capacitated for use with either support and having a cut-away side, substantially as described.

In testimony whereof I have hereunto set my hand in the presence of two subscribing witnesses.

GEORGE F. READ.

Witnesses:
F. W. H. CRANE,
GEO. M. BROWN.