(12) INTERNATIONAL APPLICATION PUBLISHED UNDER THE PATENT COOPERATION TREATY (PCT)

(19) World Intellectual Property Organization
International Bureau

(43) International Publication Date
24 January 2008 (24.01.2008)

PCT

(10) International Publication Number
WO 2008/010164 A2

(51) International Patent Classification: Not classified

(21) International Application Number:
PCT/IB2007/052789

(22) International Filing Date: 12 July 2007 (12.07.2007)

(25) Filing Language: Italian

(26) Publication Language: English

(30) Priority Data:
TO2006A000508 13 July 2006 (13.07.2006) IT

(71) Applicant *(for all designated States except US)*: **POLITECNICO DI TORINO** [IT/IT]; Corso Duca degli Abruzzi 24, I-10129 Torino (IT).

(72) Inventors; and

(75) Inventors/Applicants *(for US only)*: **GRATTONI, Alessandro** [IT/IT]; Via Bussoleno 89, I-10096 Collegno (torino) (IT). **CANAVESE, Giancarlo** [IT/IT]; Via Staffarda 1, I-10141 Torino (IT).

(74) Agents: **GERBINO, Angelo** et al.; Corso Emilia 8, I-10152 Torino (IT).

(81) Designated States *(unless otherwise indicated, for every kind of national protection available)*: AE, AG, AL, AM, AT, AU, AZ, BA, BB, BG, BH, BR, BW, BY, BZ, CA, CH, CN, CO, CR, CU, CZ, DE, DK, DM, DO, DZ, EC, EE, EG, ES, FI, GB, GD, GE, GH, GM, GT, HN, HR, HU, ID, IL, IN, IS, JP, KE, KG, KM, KN, KP, KR, KZ, LA, LC, LK, LR, LS, LT, LU, LY, MA, MD, ME, MG, MK, MN, MW, MX, MY, MZ, NA, NG, NI, NO, NZ, OM, PG, PH, PL, PT, RO, RS, RU, SC, SD, SE, SG, SK, SL, SM, SV, SY, TJ, TM, TN, TR, TT, TZ, UA, UG, US, UZ, VC, VN, ZA, ZM, ZW.

(84) Designated States *(unless otherwise indicated, for every kind of regional protection available)*: ARIPO (BW, GH, GM, KE, LS, MW, MZ, NA, SD, SL, SZ, TZ, UG, ZM, ZW), Eurasian (AM, AZ, BY, KG, KZ, MD, RU, TJ, TM), European (AT, BE, BG, CH, CY, CZ, DE, DK, EE, ES, FI, FR, GB, GR, HU, IE, IS, IT, LT, LU, LV, MC, MT, NL, PL, PT, RO, SE, SI, SK, TR), OAPI (BF, BJ, CF, CG, CI, CM, GA, GN, GQ, GW, ML, MR, NE, SN, TD, TG).

[Continued on next page]

(54) Title: DEVICE FOR OSMOTIC PRESSURE MEASUREMENT AND MEASUREMENT METHOD USING IT

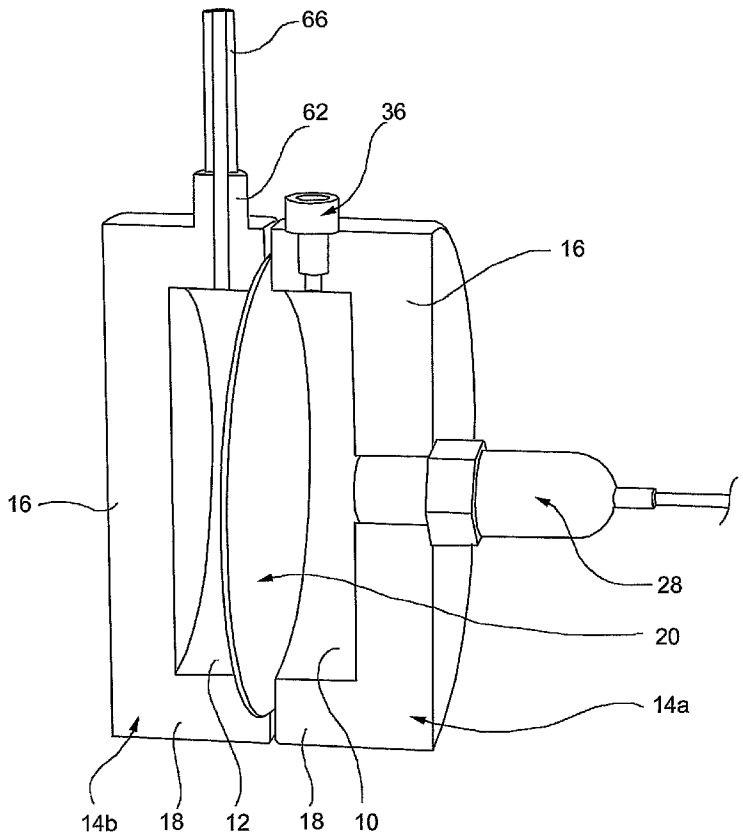

(57) Abstract: The osmotic pressure measurement device comprises a hollow shell in which a chamber (10) is machined, which contains a solution which osmotic pressure has to be measured. The device also houses a solvent chamber (12). A semipermeable membrane (20) separates the chambers (10, 12). The device presents elements useful to increase the pressure in the solution chamber (10) and devices useful to measure the pressure in the solution chamber (10). The measurement process is divided in two parts: a) set the solution chamber (10) pressure at a specific value; b) let the pressure value in the chamber (10) to evolve naturally toward the actual osmotic pressure equilibrium value, nullifying at the same time the solvent flow between the chambers (10, 12).

WO 2008/010164 A2

Declarations under Rule 4.17:

— *as to applicant's entitlement to apply for and be granted a patent (Rule 4.17(ii))*

— *of inventorship (Rule 4.17(iv))*

Published:

— *without international search report and to be republished upon receipt of that report*

For two-letter codes and other abbreviations, refer to the "Guidance Notes on Codes and Abbreviations" appearing at the beginning of each regular issue of the PCT Gazette.

Device for osmotic pressure measurement and measurement method using it

The present invention concerns an osmotic pressure measurement device and measurement method using it.

As it is known, when a solvent and a solution are separated by a semipermeable membrane (a semipermeable membrane allows the flux of solvent molecules, but filters the solute molecules), a spontaneous solvent flux occurs, from the solvent to the solution, vectorially following the gradient of concentration. Thanks to this flux a difference in level between free faces of the two liquids is observed when the osmotic phenomenon reaches the equilibrium. The osmotic pressure is equal to the pressure caused by a solution column, as high as the difference in level, on its base.

Moreover the solvent flux causes a solution dilution that reduces the initial concentration C_i to the final value $C_f < C_i$. Therefore the measured osmotic pressure will not be relative to the solution concentration C_i but to the actual final concentration C_f. Typically, if the osmotic phenomenon is left to evolve naturally, the equilibrium osmotic pressure will be reached within a time of hours to days.

Commercial osmometers measure the pressure in an indirect way based on the measure of the freezing point depression or vapor pressure deficit. Since the osmotic pressure is directly correlated to the solute molar concentration, at very low concentrations subsists a linear and direct proportionality between osmotic pressure and the other colligative properties. At higher concentrations the linear relation does not subsists anymore and the relation between osmotic pressure and the other colligative properties is commonly described by virial series which coefficients must be empirically determined. Moreover the commercial devices for osmotic pressure measurement require to be calibrated with standard solutions. Therefore, the measurement procedures of the above mentioned commercial devices, even if allow to acquire results in a short times, are based on indirect measurements of colligative properties and intrinsically limited by the use of empirical coefficients.

The objective of the present invention is to obviate and to overcome the cited conventional techniques limitations.

According to the invention such aim is achieved thanks to a device and relative measurement procedure having the features discussed into the following claims.

The invented system almost nullifies the solvent flux and then the solution dilution during the measurement. To this purpose, the invented measurement system constrains the solution to a constant volume. The solution is then confined in a substantially rigid chamber from which the air is removed during the solution loading. The rise of the internal pressure can cause negligible volume variations, thanks to the high elasticity bulk module of liquids. In other words, with a minimum passage of solvent through the membrane, a big increase of pressure in the solution chamber is observed. This feature allows the system to reach its osmotic equilibrium without a significant solvent flux and consequently without a significant solution dilution.

Furthermore the device described in this invention report allows decreasing drastically the measurement times. Thanks to the innovative idea to artificially set the system closer to the osmotic pressure equilibrium, it is possible to collect the osmotic pressure after a short settlement time (few minutes).

Additionally the instrument allows to measure high osmotic pressures, of hundreds bar preventing membrane damages. This result can also be obtained thanks to the fact that the measurement time is significantly reduced respect to conventional membrane osmometry. Consequently the device mechanical components are subject to mechanical stress for a shorter time.

It also has to be noticed that with the invented device the osmotic pressure is directly measured. This characteristic reduces the measurement errors compared to conventional indirect measurement techniques.

Further advantages and features of the present invention will be underlined in the following detailed description, given as not limitative example and referring to the attached figures, in which:

Figure 1 shows a perspective view of a device described in the present invention,

Figure 2 shows a schematic cross section view of the device shown in figure 1,

Figure 3 shows a perspective cross section view of one of the two shells of the invented device,

Figure 4 shows a perspective cross section view of shell shown in figure 3,

Figure 5 shows a perspective cross section view of a clamping group associated to the shell shown in figures 3 and 4,

Figure 6 shows a cross section view of the clamping group shown in figure 5,

Figure 7 shows a perspective view of the other shell of the invented device,

Figure 8 shows a perspective view of a particular of the shell shown in figure 7,

Figure 9 shows a perspective view of an accessory of the shell shown in figures 7 and 8,

Figure 10 shows a section view of the two assembled shells,

Figure 10A shows an enlarged scale particular shown in figure 10,

Figure 11 shows the two shells in an intermediate partial assembled configuration,

Figure 12 shows a perspective view of an alternative invented device design,

Figure 13 shows a perspective and partially sectioned view of a particular of the device shown in figure 12, and

Figure 14 is a graph that shows the pressure variation versus time of a measurement procedure performed with the device shown in figure 12.

A measurement device of the osmotic pressure comprises (figures 1 and 2) of a hollow shell which contains a solution chamber 10 (containing a solvent and a solute) whose osmotic pressure has to be measured, and a chamber 12 that contains the solvent.

The cylindrical shaped shell is composed of two half-shells 14a, 14b which have base wall 16 and a side wall 18. The chambers 10, 12 are machined into the half-shells 14a and 14b. The edges of the side walls 18 of the half-shells 14a, 14b are held together and provided of clamping means and reciprocal positioning means.

The chambers 10, 12 are frontally separated by a membrane 20 semipermeable for the solvent, for example composed by a supporting paper layer on which a composite polyamide film is deposed.

The clamping means include (figure 11) a plurality of holes 22 circumferentially arranged on both edges and screws 23 (shown in figure 10) screwed in the holes 22. The positioning means include a guide hole 24 machined on the edge of the side wall 18 of the half-shell 14b matching and coupable with a pivot 26 of complementary shape protruding from the side wall 18 of the other half-shell 14a. The clamping means allow to precisely align the holes 22 of the two half-shells 14a, 14b without needing any correction and thus avoiding any potential damages of the interposed membrane 20.

The chamber 10 is provided of means able to induce a pressure increase and means able to measure the inner pressure.

The measurement pressure means housed in the solution chamber are a pressure transducer 28, more conveniently of piezoresistive type, that is tightened in a channel 30 machined in the center of the base wall 16. For example, the pressure transducer 28 could be a LP661-4-200 model produced by DSEurope, which relies on the Wheatstone bridge principle. In a known manner and not shown in the figures, the pressure transducer 28 is electrically supplied and connected to an acquiring data system.

The means able to increase the pressure in the solution chamber 10 comprise a member able to penetrate into the chamber and to reduce its volume. This member (figures 5 and 6) is a screw 32 whose distal end can be screwed into an axial hole 34 machined into a first sleeve 36. The latter has a lower portion 38 externally threaded and screwed into a first duct 40 (figure 4) passing through the side wall 18 of the solution chamber10.

The duct 40 is machined in the top part of the half-shell 14a and the chamber edge close to the duct 40 is beveled in order to allow an easier air escaping. The channel 40 is composed of two straight parts 42a, 42b whose axes form an angle, of which the most external 42a is threaded so as to be coupled with the external threaded portion 38 of the sleeve 36. The external surface of the half-shell 14a is flattened orthogonally to the axis of the most external part 42a of the duct 40 to provide a supporting plan for a sealing ring 44 of copper, which is pressed by a contrast surface 46 machined on the external surface of the first sleeve 36.

The screw 32 presents sealing means annularly arranged around its top portion which is external in respect of the sleeve 36. The sealing means comprise a deformable tin ring 48, a locknut 50 screwed on the threaded stem of the screw 32 and an annular shell 52 part of the locknut 50, and which circumferentially constrains the ring 48 preventing radial deformations.

The solution chamber 10 is surrounded (figure 3) by an annular protrusion 54, on which two circumferential grooves 56 are machined, wherein a respective O-ring 58 useful to guarantee the hermetical seal (figure 11) is inserted. The two O-ring grooves 56 conveniently present a semi-circular section. This shape has been studied to obtain two results. The first one is a sucker effect maintaining the O-ring 58 in position during the device assembling. The second one is that, when the screws are tightened in the holes 22, the O-rings 58 are pressed on the membrane 20, optimizing the sealing action since they have not the chance of deforming inside their seats, wherein they are precisely inserted.

Considering now the solvent chamber 12, the upper portion of the side wall 18 of the respective half-shell 14b is crossed (fig. 8) by a second vertical duct 60 communicating with

the external environment. A lower portion 61 of a second sleeve 62 is threaded within the second sleeve 60 (fig. 9), within the upper portion of axial cavity 64 of which it is inserted a graded small capillary tube 66 allowing to read the level of the sealing within it. An O-ring 68 ensures the sealing between the second sleeve 62 and the half-shell 14b. The small tube 66 is e.g. of PE with a length of 330 mm and a measurement resolution of 1/100 of ml. For example the sleeve 62 is realized in Anticorodal alloy which has an excellent resistance to corrosion and does not prejudice the necessary solidity, and has on its upper part a hexagonal shape depression 70, allowing screwing it to the half-shell 14b.

The second duct 60 has an internal part 72 which presents a smaller diameter (for example 2mm) enough to contain a syringe needle (for example with a diameter of 0.8mm) for injecting the solvent and to simultaneously allow the air escaping.

From the central region of the base wall 16 of the half-shell 14b, which defines the solution chamber 12 (figure 7), several parallel ribs 74 protrude which are arranged comb-like and oriented parallely to the second duct 60. The central region is surrounded by an annular element to which is however lower than the external edge of the side wall of half-shell 14 and wherein it is machined an annular groove 78, wherein a sealing gasket 80 is inserted (figs. 10 and 10A).

A membrane supporting member is posed on the element 76 and is shaped as a disk 82, formed by an inner circular region 84 of porous material and an annular external region 86 of massive material, which is fixed to the inner region. The porous material is e.g. inox sinterised porous steel, whereas the massive and mechanically resistant material is AISI 303 steel having the same thickness. The two materials are welded and the welding is rectified so as the membrane 20 is posed on a flat surface, avoiding that it can be damaged by irregularities of the surface.

As it will be clearer in the following description describing the measurement method, the vertical orientation of the ribs 74 forms a sort of channels array that allow the air escaping through the duct 60. Conveniently, the global cross section of the ribs 74 is designed to re-

sist to the stress caused by the osmotic pressure on the disc 82, and at the same time to minimize the occlusion of the section communicating with the membrane.

In order to effect a measurement, the device is preventively cleaned for example with bidistilled water and denatured alcohol or possibly detergent.

An hour before the beginning of the test, the disc 82 and the membrane 20 are soaked in bidistilled water, in order to maintain wet the porosities and to dissolve possible impurities. Before screwing the pressure transducer 28 in its channel 30, a Teflon tape can be wrapped on its threaded portion, so as to ensure a hermetical seal of the connection.

The gasket 58 and support disc 82, still wet, are placed in their grooves 56 machined in the inner cavity of the half-shell 14b (fig 11). The membrane 20 is carefully laid down onto the supporting disc 82, paying attention to put on it the paper surface and to display the polymeric surface in the gasket direction, the edges of the side walls 18 of the two half-shells 14a, 14b are put close, whose correct positioning is ensured by the coupling existing between pivot 26 and guide-hole 24, and the screws 23 are tightened within the holes 22.

A sample of the solution whose osmotic pressure has to be measured is then slowly injected within the chamber 10. Such injection is effected through the cavity 34 of the sleeve 36 inserted into the first duct 40, paying attention that the air initially contained in the chamber 10 goes completely out. Now the screw 32 is threaded within the sleeve 36 until the pressure transducer 28 reads an inner pressure within the chamber 10 of the solution about equal to the estimated osmotic pressure. To obtain a hermetic seal of the chamber 10, the locknut 50 is tightened against the top surface of the sleeve 36, axially pressing the ring 48 whose radial deformation is effectively contained by the annular shell 52. At the same time, the chamber 12 is filled of solvent by a syringe and then the second sleeve 62 is screwed within the duct 60. The small tube 66 is then inserted within the upper portion of the sleeve 62, paying attention that the small tube 66 is suitably filled of solvent, so as it is possible to read the successive minimal changes of level by the graded scale.

If the system is left to evolve naturally, the pressure inside the chamber 10 tends to reach the equilibrium osmotic pressure which value is collected through the pressure transducer 28. This equilibrium is reached thanks to a solvent flow occurring through the membrane 20. If the setting pressure was higher than the osmotic pressure the solvent flow is directed from the chamber 10 toward the chamber 12.

If the setting pressure was below the osmotic equilibrium the solvent flow occurs in the opposite direction. It has to be noticed that - when the values of estimated pressure and actual osmotic pressure - are reasonably close, the equilibrium condition is obtained after a time of the order of tens of minutes - instead after hours or days as in the known devices - with a remarkable reduction of the time requested for effecting the measurement method. Further, the solvent flow is in any case negligible in respect of that which would have taken place when the osmotic pressure would have been naturally obtained. Hence, it is possible, as a first approximation, confusing the solute initial concentration with the final one. If necessary, it is however possible to calculate exactly the final concentration value, to which the osmotic pressure value has to be referred, by knowing the initial solute concentration value and the amount of solvent flown between the two chambers which can be read on the graded capillary 66.

Figures 12 and 13 show an alternative device design, in which the indication numbers correspond to the ones used in the previous images.

In this case the duct 40 is only useful to load the solution in the chamber 10, so as a simple sealing cup 36a is useful to seal the inner chamber 10 and there is no more need of a screw and locknut as written above. The element that penetrates in the chamber 10 is linear actuator 90 stem 88, for example piezoelectric, and can be mounted on the bottom side of the solution shell 14.

The measurement process can be automatized by using a microprocessor, thanks to which, the times required to measure the final osmotic pressure value is drastically reduced as well as the amount of solvent crossing the membrane 20. In particular the microprocessor al-

lows controlling the position of the stem 88 of the linear actuator 90. When the stem 88 penetrates in the channel 92 connected to the chamber 10, the volume of the solution is reduced and the pressure increases. The hermetical seal between the stem 88 and the device is obtained through the use of a U-ring, normally able to resist pressure as high as 400 bars. The piezoelectric actuator's high displacement accuracy allows controlling the inner pressure with high efficacy.

In the following paragraph an example of measurement performed with an automatic control is described, when an osmotic pressure of 100bar is expected.

By advancing the stem 88 of the linear actuator 90 within the channel 92, the solution pressure in the chamber 10 is increased to 105 bar (see the point 1 in the figure 14 reporting the pressure values in function of time).

The pressure will tend to naturally decrease toward an asymptotic value equal, in value, to the actual osmotic pressure. The pressure transducer 28 collects the pressure values at two distinct points (a) and (b) and the slope of the relative tract of the curve pressure-time can be calculated. Thanks to this value, it is estimated (using e.g. a logarithmic-like prevision method) the asymptotic value of the pressure corresponding to the osmotic pressure and the actuator 90 is activated in order it establishes such estimated pressure value of the solution, e.g. 96 bar (point 2). The established pressure is now lower than the equilibrium value, so as the pressure will tend to naturally increase.

The pressure transducer 28 collects again other pressure data at two different time points (c) and (d) and the slope of the relative tract of the curve pressure-time can be calculated. Thanks to this value, the asymptotic value of the pressure corresponding to the osmotic pressure is again estimated and the actuator 90 is activated in order it establishes a pressure within the solution chamber 10 corresponding to such new estimated value, e.g. 101 bar, and so on.

The measurement method is based on an iterative process that ends when the last calcu-

lated slope of a tract of the pressure-time curve is lower than a given value, thus allowing to arrive quickly at the asymptotic value of pressure corresponding to the osmotic pressure (point 4). In sum, effecting the automatised measuring method just described requires a few minutes, with an almost nil solvent flow, thus further amplifying the advantages of the device of the present invention.

The design and the shapes of the components of the device can significantly vary from the ones described as example. Nevertheless the system can respect the principles of the invention, without falling out the borders of the present invention, as described in the following claims.

CLAIMS

1. A device for osmotic pressure measurement comprising:

- a hollow shell which defines internally a chamber (10) for containing a solution comprising a solvent and a solute and whose osmotic pressure has to be measured, and a chamber (12) for containing the solvent,

- a membrane (20) semipermeable for the solvent separating the chambers (10, 12),

- means for increasing the pressure in the chamber (10) where the solution is housed, and

- pressure measurement means for the measure of the pressure in the solution chamber (10).

2. The device according to claim 1, in which the pressure measurement means for the measurement of the pressure in chamber (10) is a pressure transducer (28), preferably a piezoresistive pressure transducer.

3. The device according to claim 1 or 2, in which the means for increasing the pressure in the chamber (10) comprise a member which can penetrate into the chamber (10) reducing the volume and increasing the pressure of the solution housed in the chamber (10).

4. The device according to claim 3, in which said member is a screw (32) having a distal end which can be screwed inside an axial hole 34 of a first sleeve (36) which has a lower portion having a threaded external surface (38) screwed within a first duct (40) passing through a wall of the chamber (10) containing the solution.

5. The device according to claim 4, in which the screw (32) has sealing means annularly arranged around the top portion thereof which is external in respect of the sleeve (36).

6. The device according to claim 5, in which the sealing means comprise a deformable ring (48), a locknut (50) screwed around the stem of the screw (32) and an annular shell (52) fixed to the locknut (50) and which circumferentially surrounds said ring (48) prevent-

ing the radial deformation thereof.

7. The device according to claim 3, in which said member that penetrates in the chamber (10) is a stem (88) of a linear actuator (90).

8. The device according to any one of the previous claims, in which said chamber (10) for containing the solution is surrounded by an annular protrusion (54) wherein it is machined at least a circumferential groove (56) wherein a respective sealing gasket (58) is inserted.

9. The device according to any one of the previous claims, in which the wall (12) of the solvent chamber (12) is crossed by a second duct (60) communicating with the external environment.

10. The device according to claim 9, in which within the second duct (60) it is threaded a lower portion of a second sleeve (62), within the top portion of the axial cavity (64) of which it is inserted a graded small tube (66) useful for reading the level of the solvent.

11. The device according to any one of the previous claims, in which said shell has cylindrical shape and is composed by two half-shells (14a, 14b), each one of which presents a base wall (16) and a side wall (18) and in which the chambers (10, 12) are respectively machined, the edges of the side walls (18) of said half-shells (14a, 14b) are held together and provided of clamping means and possibly of reciprocal positioning means.

12. The device according to claim 11, in which from the central part of the base wall (16) of the half-shell (14b) which defines the solvent chamber (12), a set of comb-like ribs (74) protrudes, which ribs are oriented parallely to the second duct (60) communicating with the external environment.

13. The device according to claim 12, comprising a membrane (20) support element which is shaped as a disk (82) formed by an inner circular region (84) of porous material

and an outer annular region (86) of compact material fixed to the inner region (84), said support element being posed on an annular member (76) wherein it is machined at least one annular groove (78) wherein a sealing gasket (80) is inserted.

14. A method for osmotic pressure measurement of a solution containing a solvent and a solute by the use of a device according to any one of the previous claims, which method comprises the steps of:

a) set the solution chamber (10) pressure to an established value, and

b) let the pressure of the solution chamber (10), evolve naturally toward a substantially stable value corresponding to the osmotic pressure value determined by an equilibrium regime without any net solvent flow between the chambers (10, 12).

15. A measurement process according to claim 14, in which the natural evolution of the pressure in step b) is stopped in order to increase the pressure in the solution chamber (10) to a new value, established on the basis of the initial evolution of the pressure during step b) and to let again naturally evolve said pressure value, said operation cycle being repeated for a desired number of times.

16. A measurement process according to claims 14 or 15, in which the osmotic pressure value that can be reached at the equilibrium is referred to the final solute concentration in the solution contained in the chamber (10), which concentration is calculated on the basis of the initial solute concentration and the net solvent flow which took place between said chambers (10, 12).

FIG.1

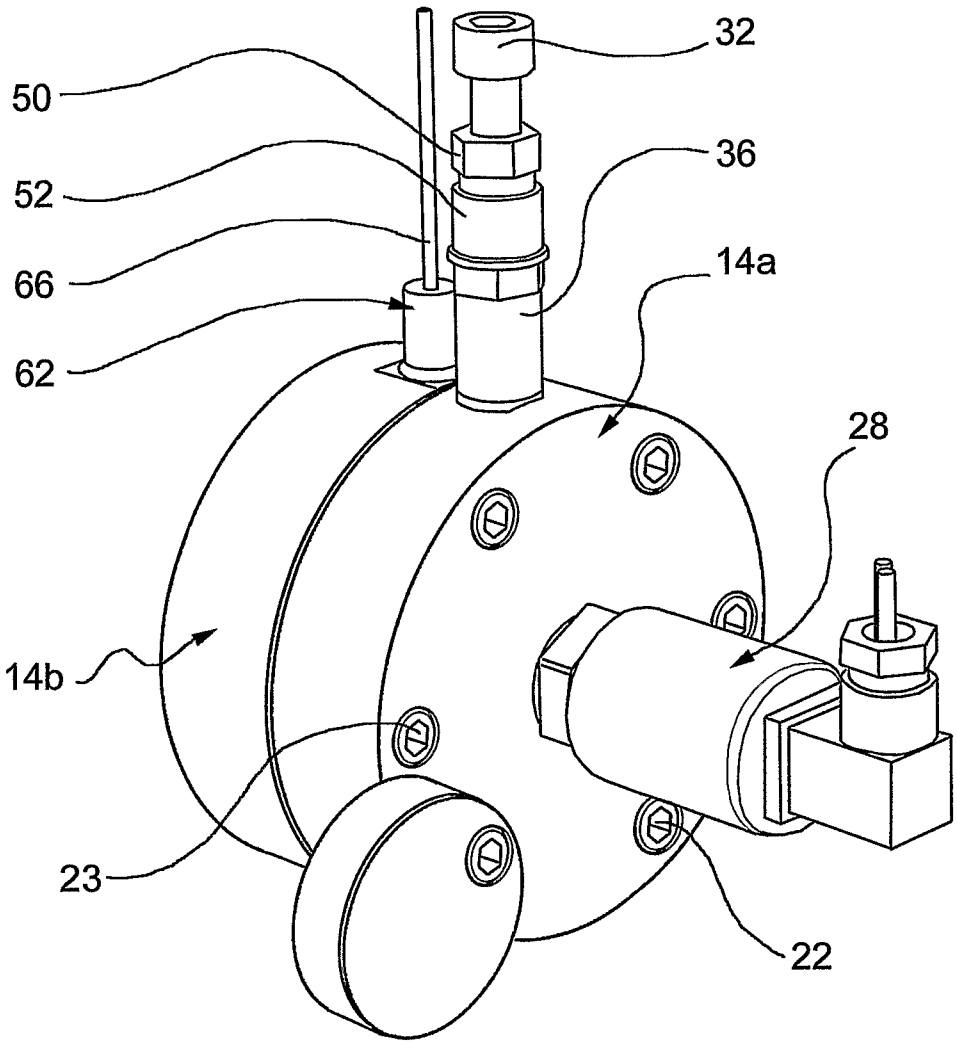

FIG.2

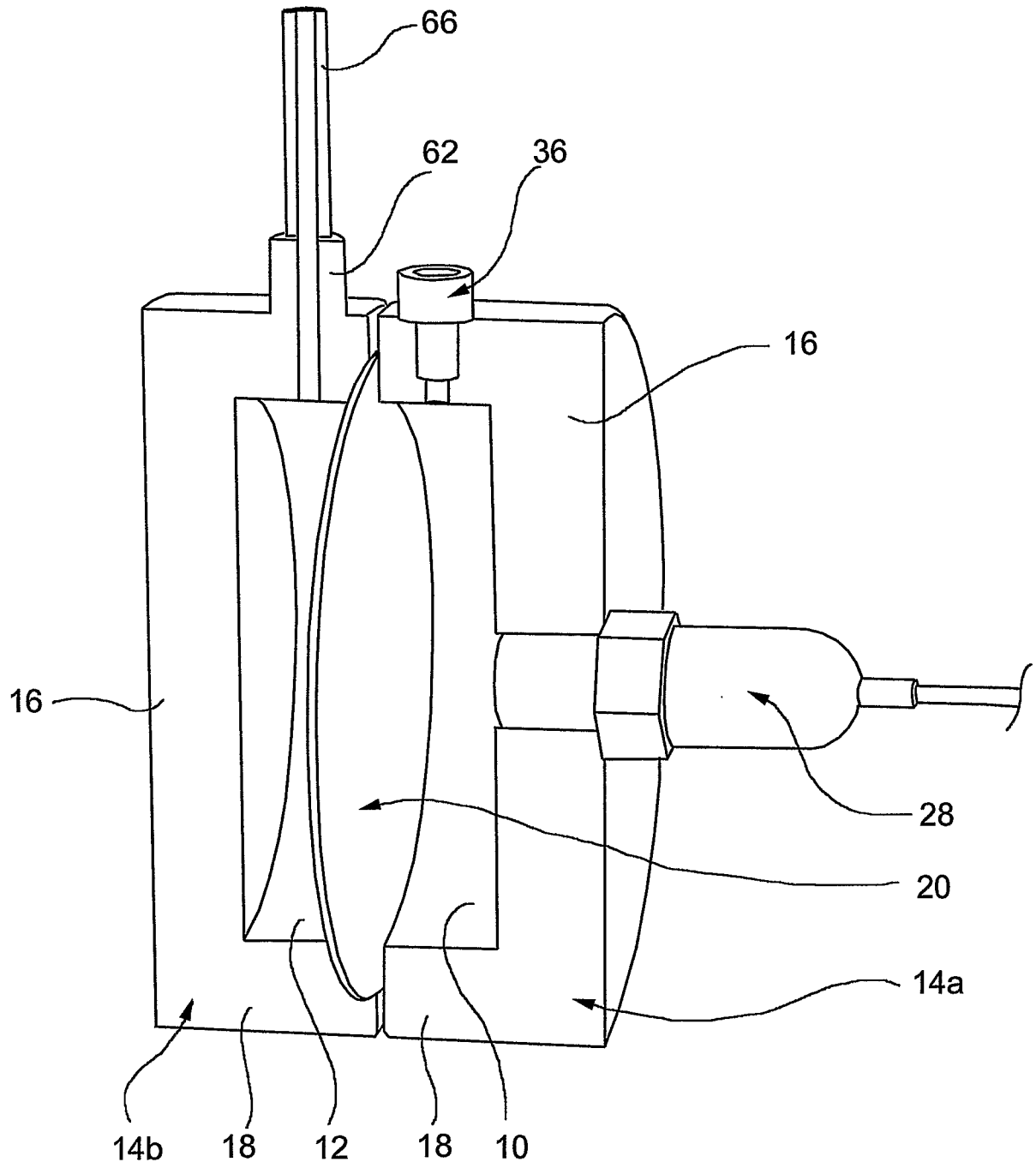

FIG.3

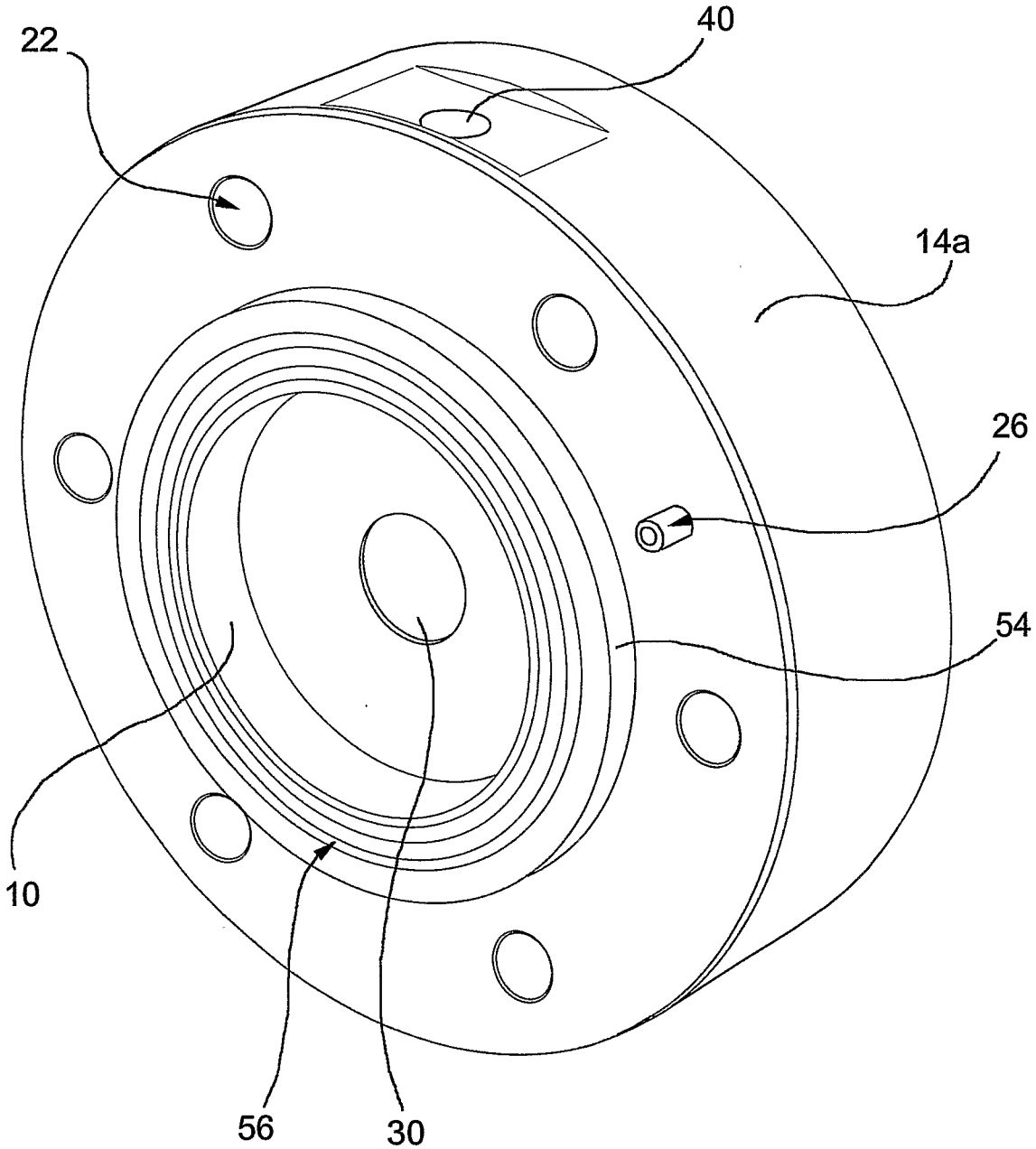

FIG.4

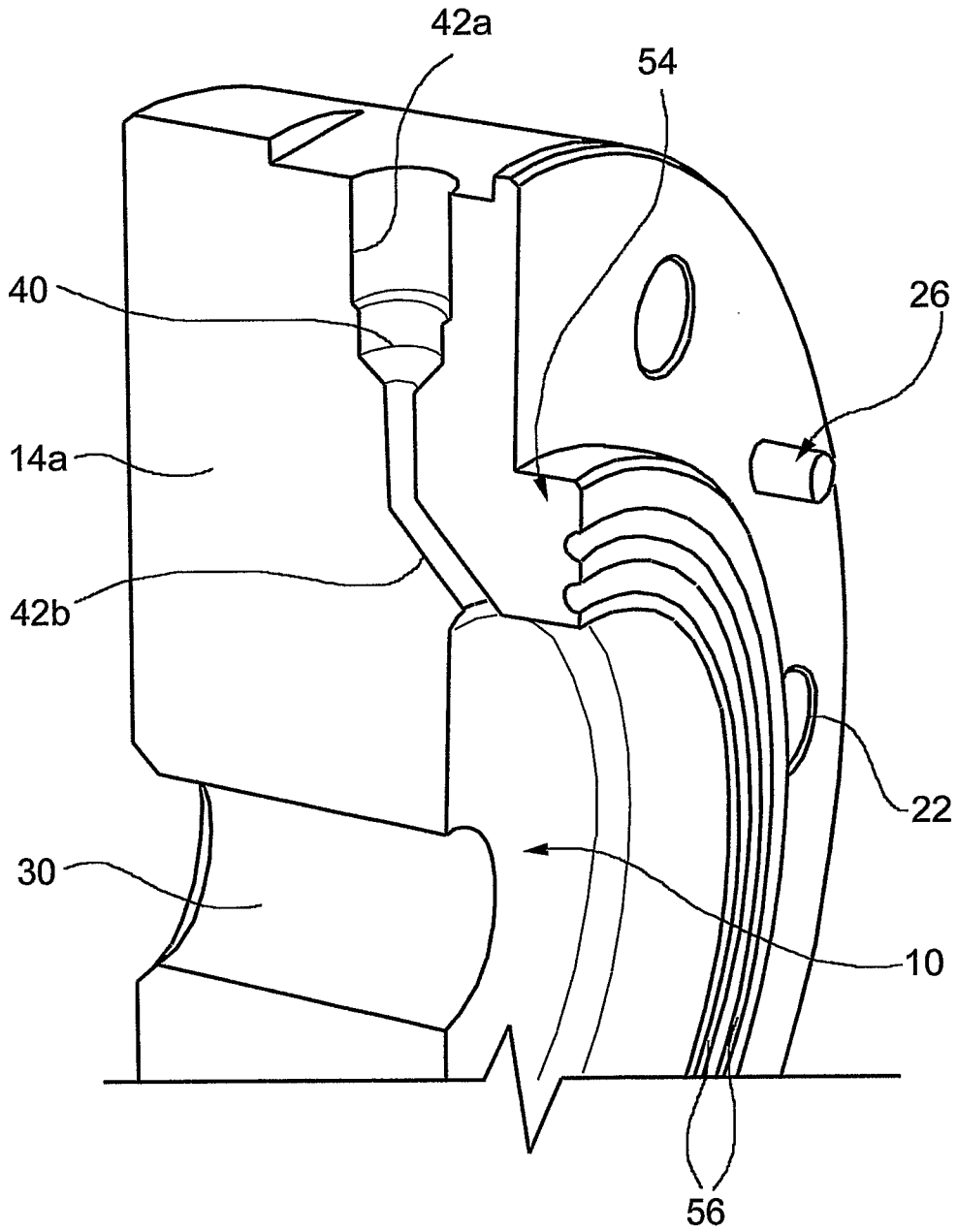

FIG.5

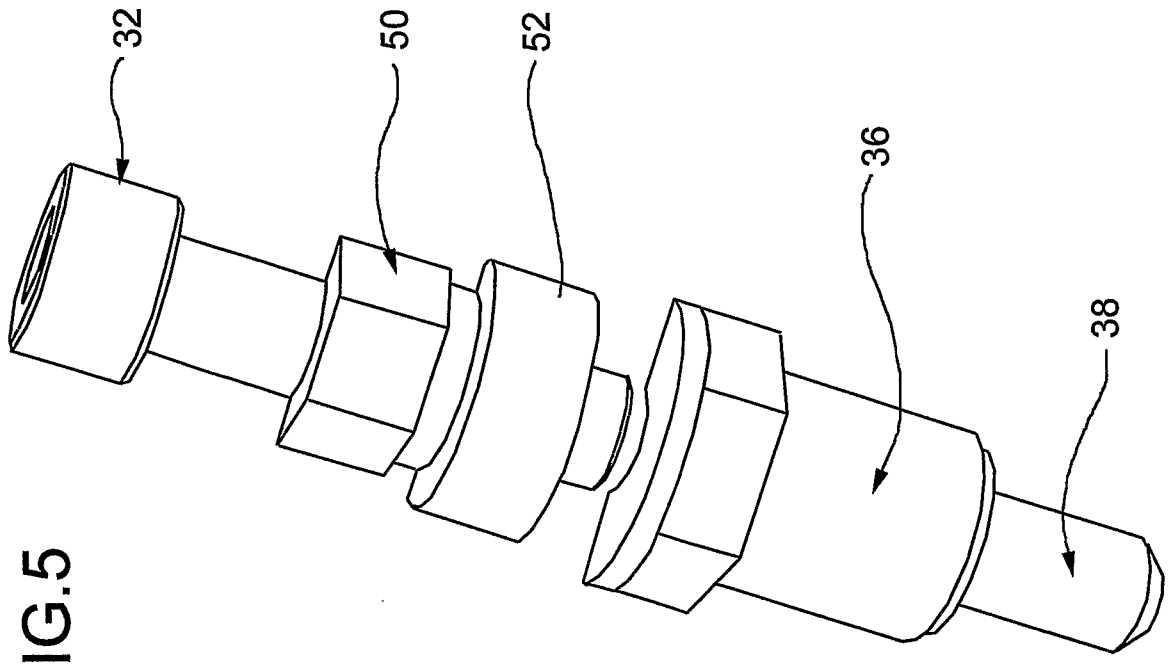

FIG.6

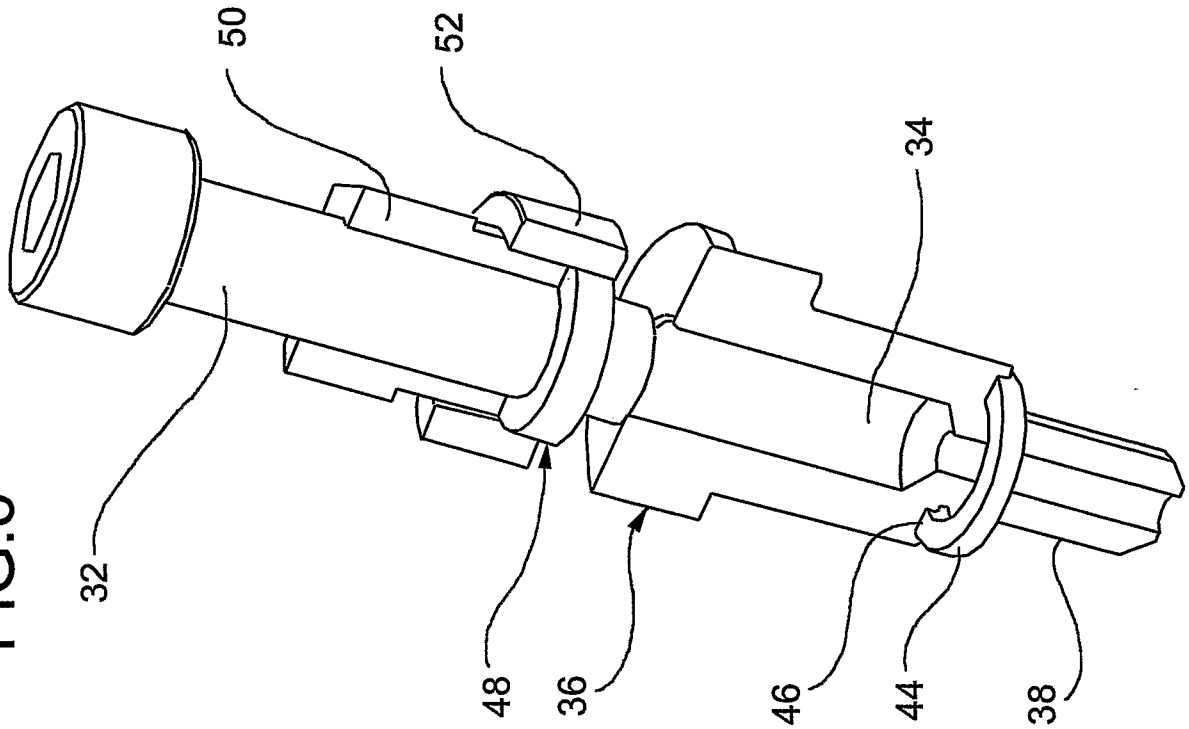

FIG.7

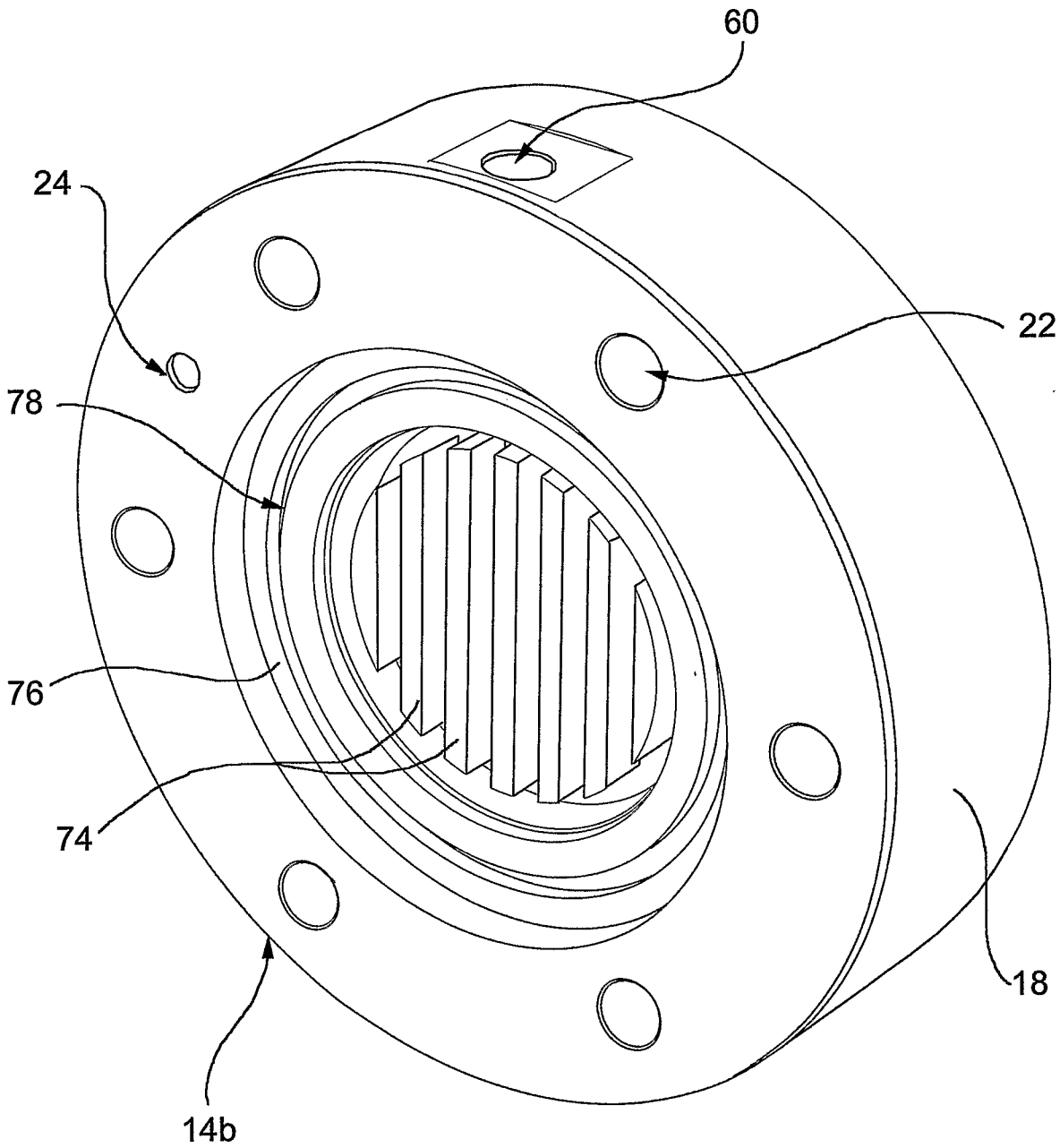

FIG.8

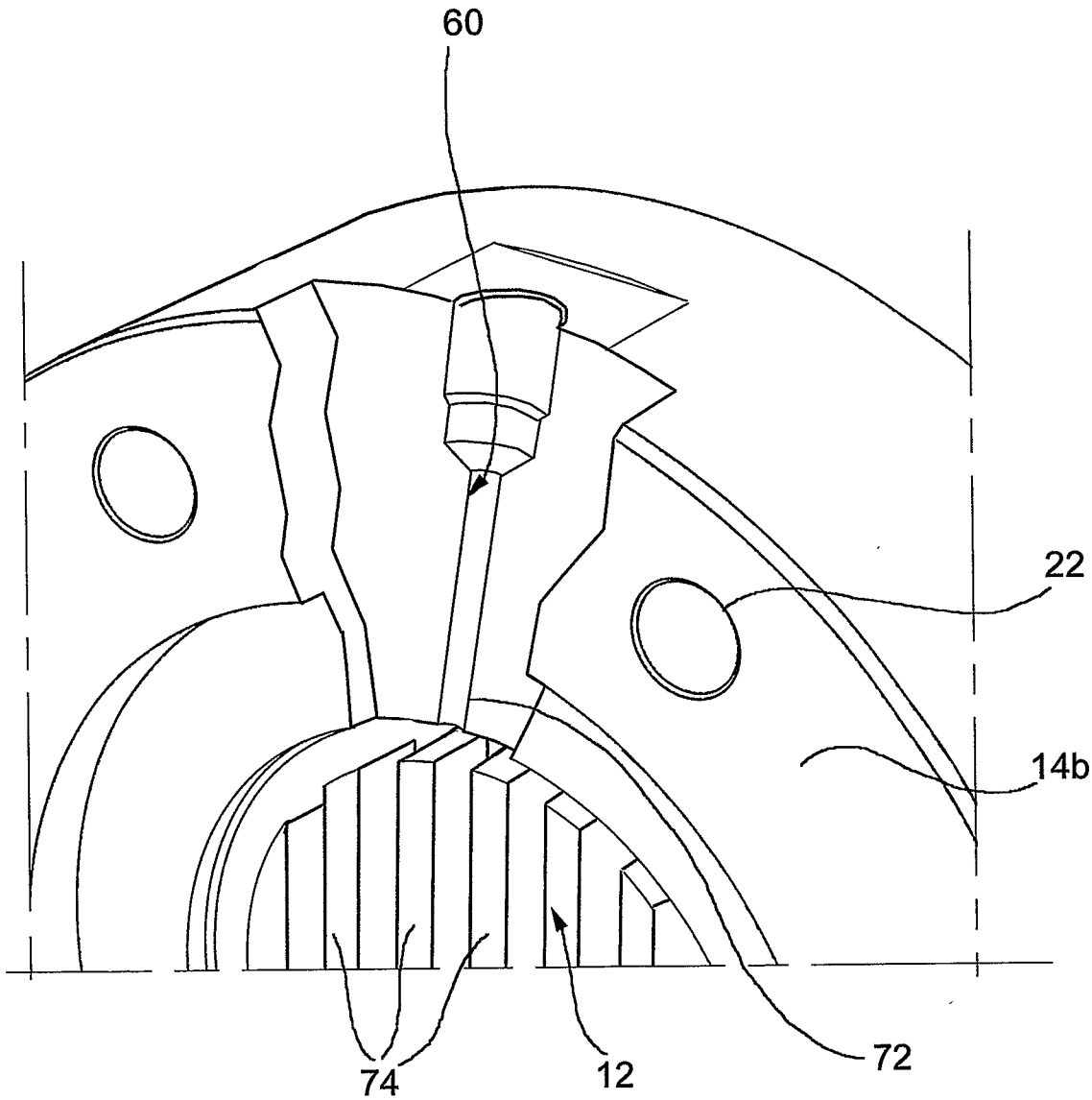

FIG.9

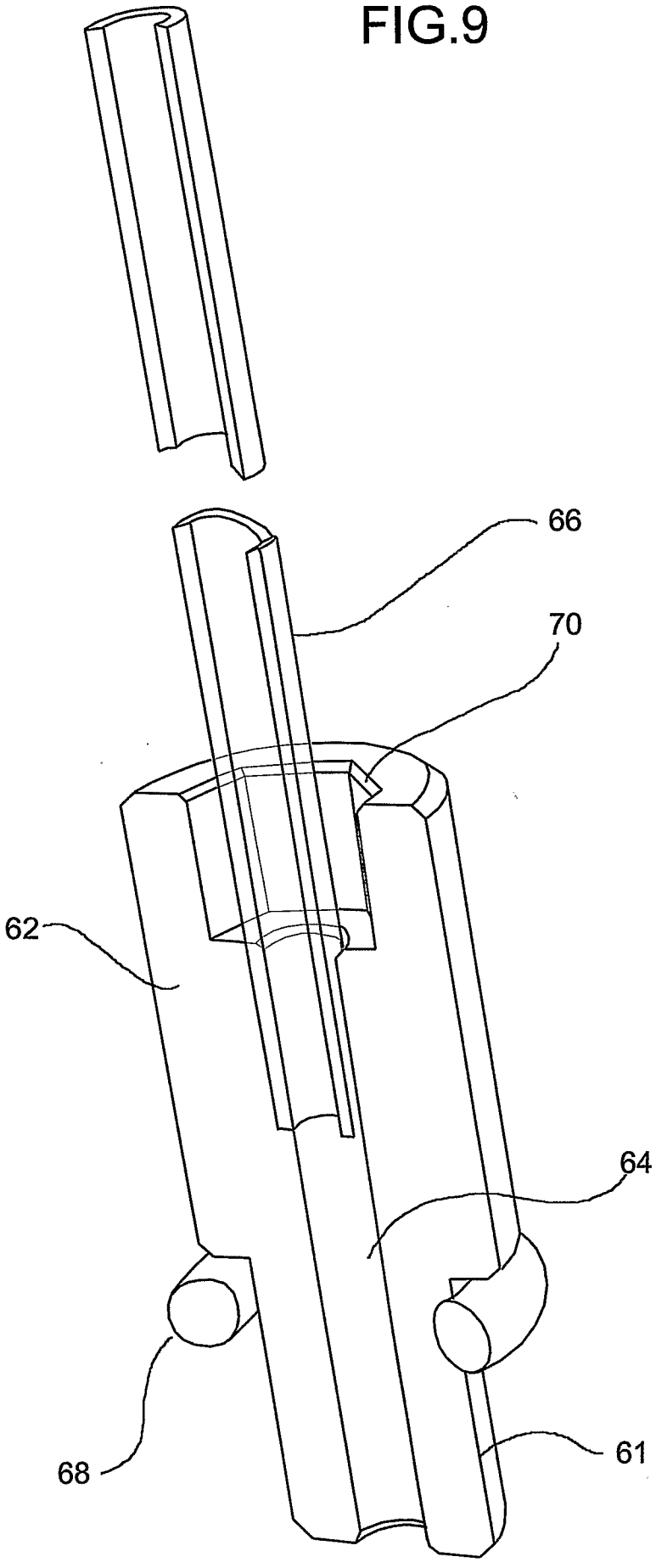

FIG.10

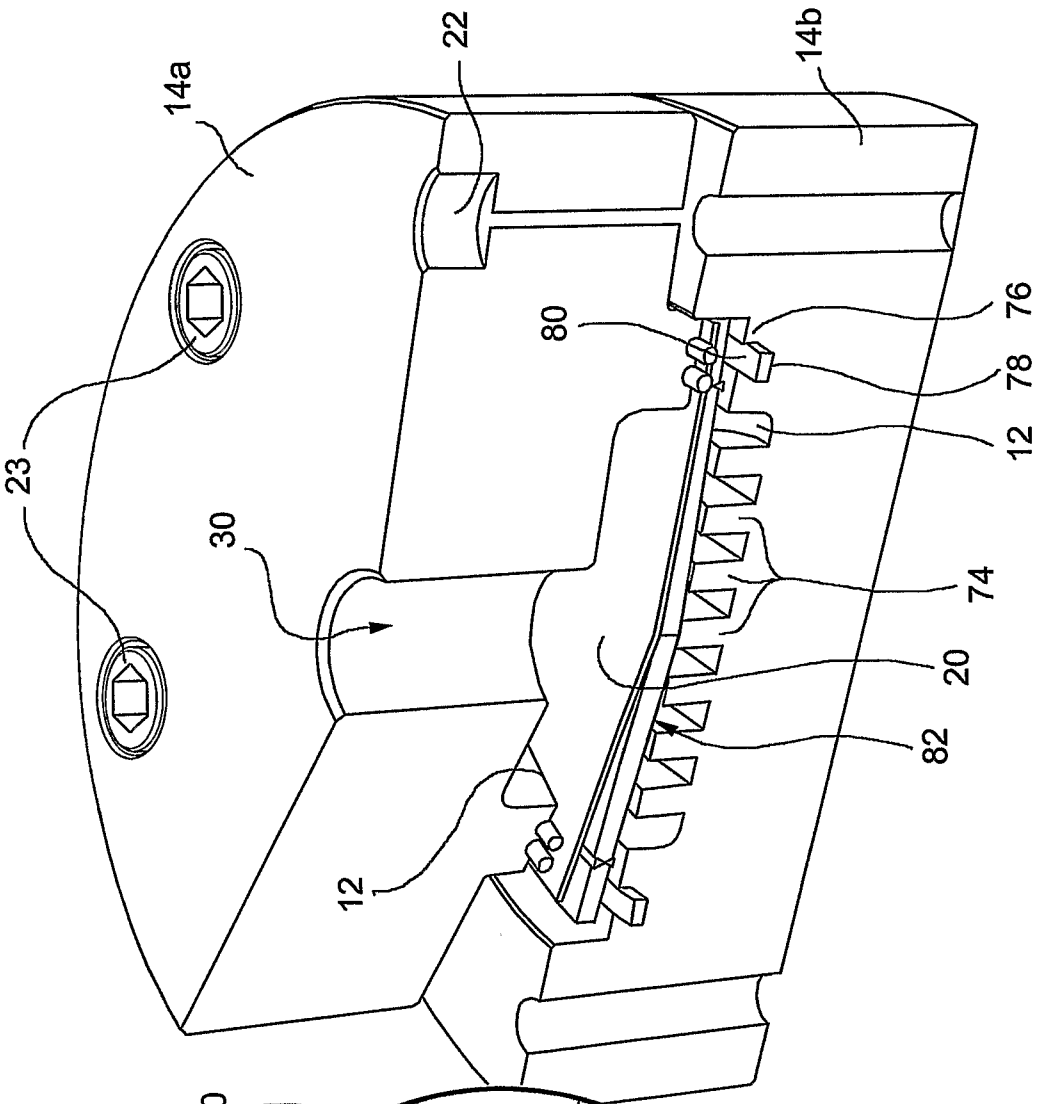

FIG.10A

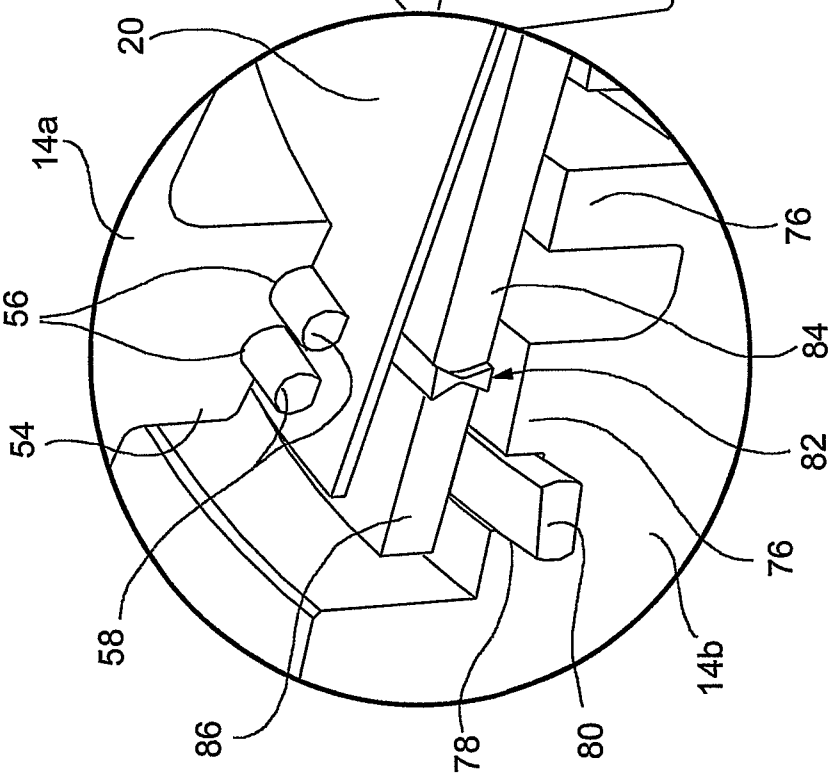

FIG.11

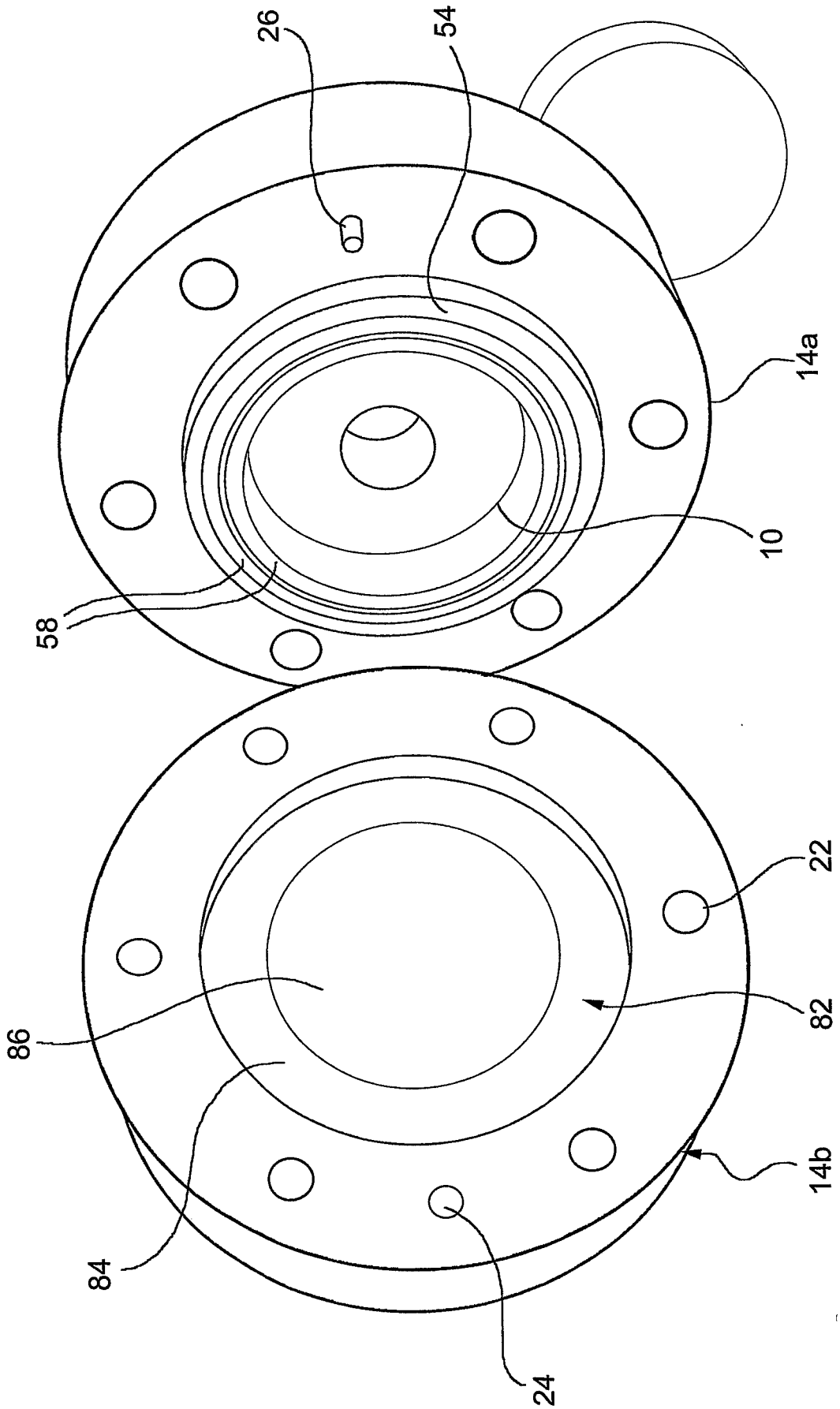

FIG.12

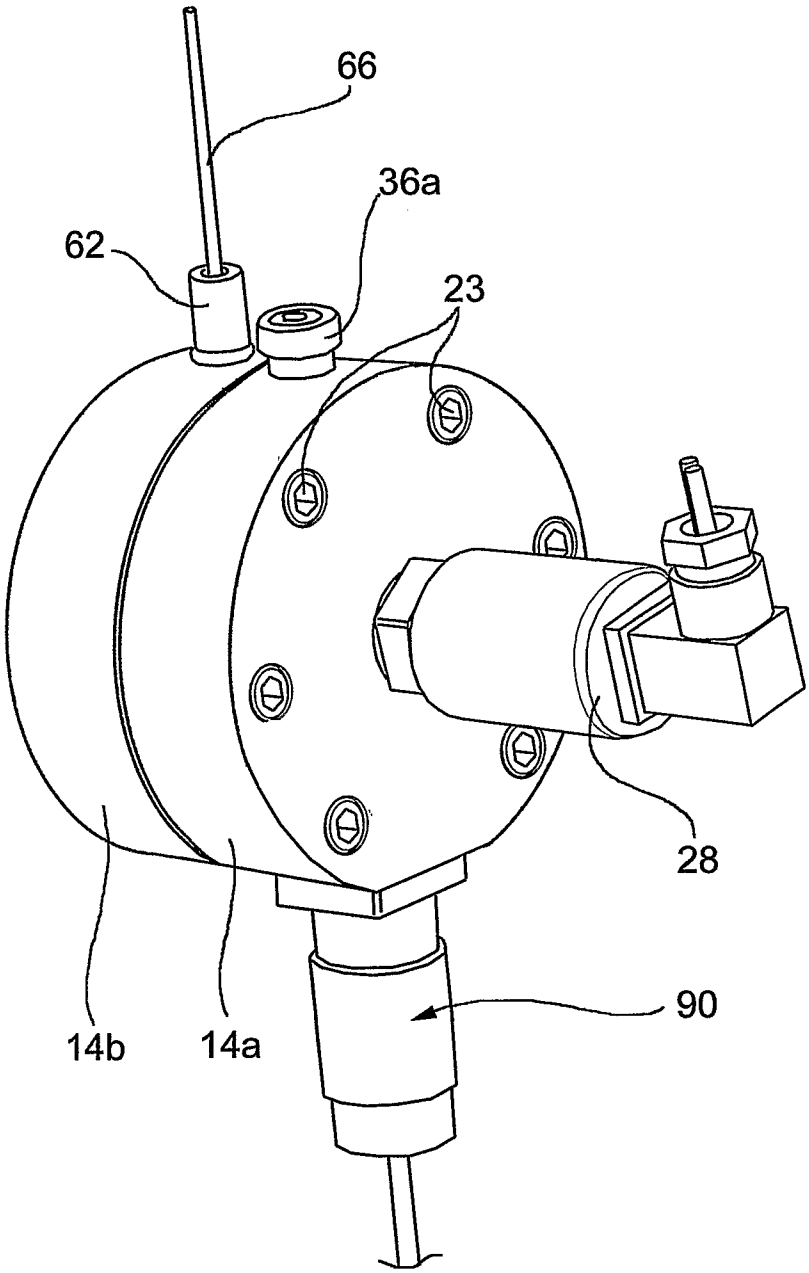

FIG.13

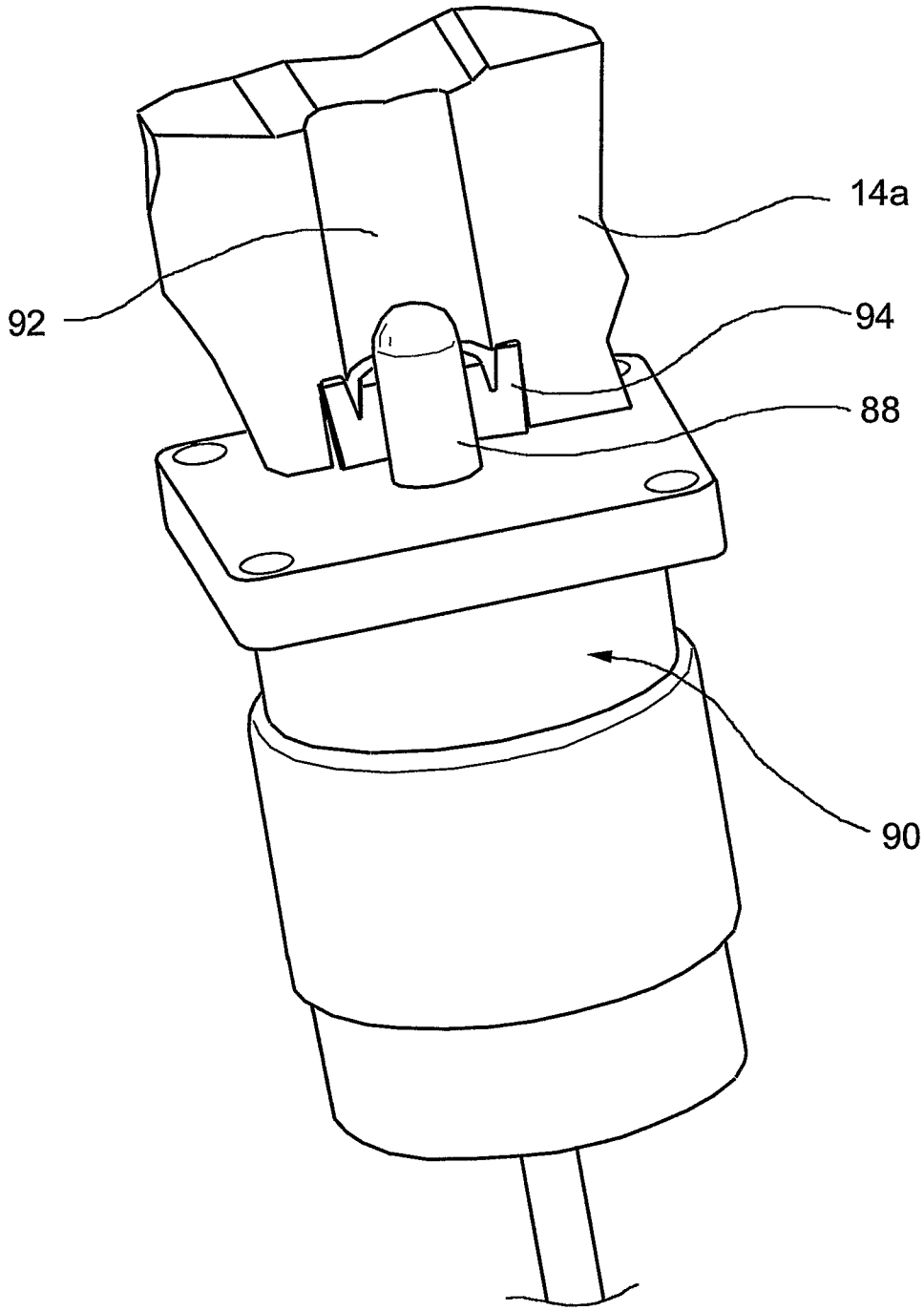

FIG.14

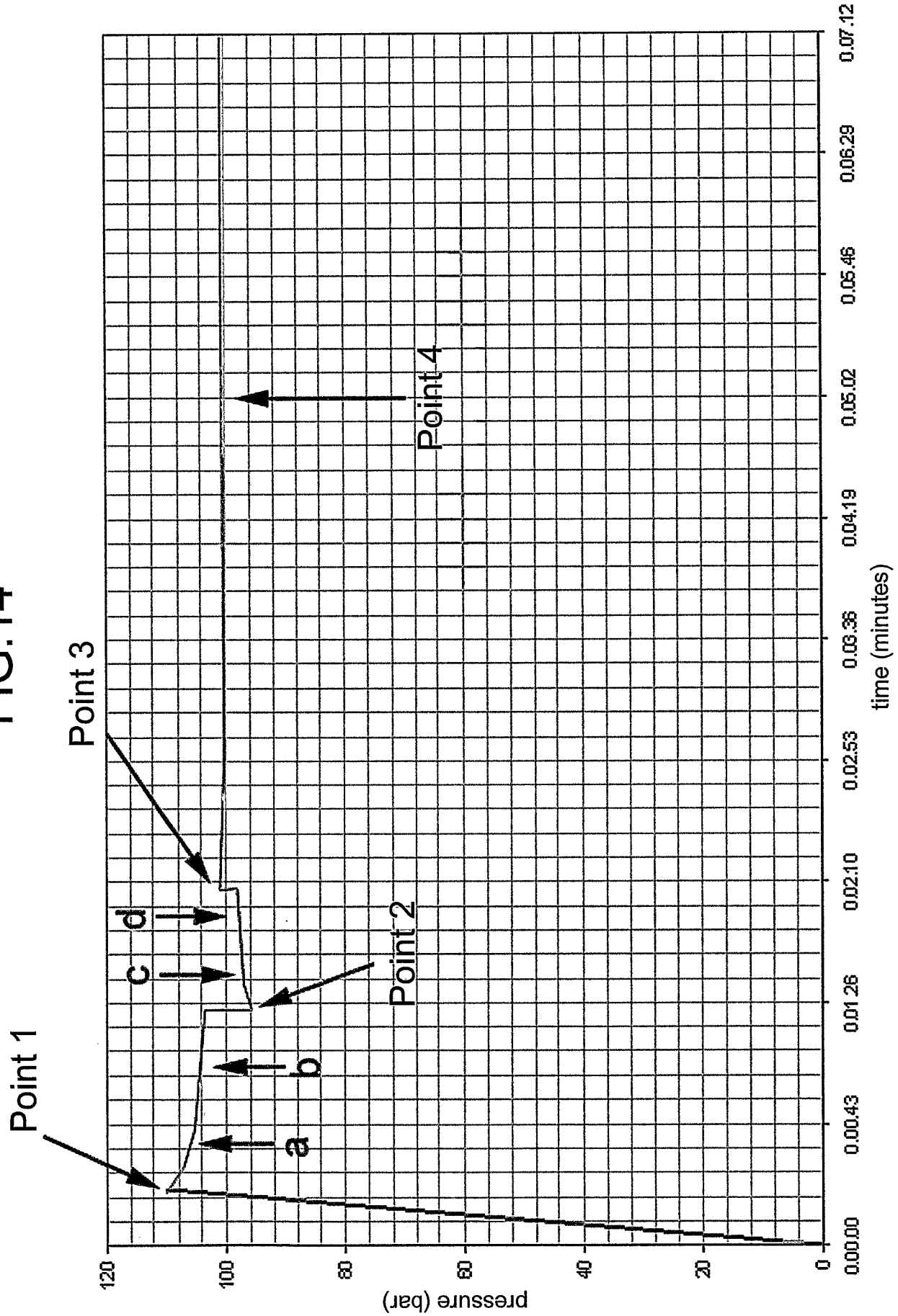
Point 1
Point 3
Point 2
Point 4
a
b
c
d
pressure (bar)
0
20
40
60
80
100
120
time (minutes)
0.00.00
0.00.43
0.01.26
0.02.10
0.02.53
0.03.36
0.04.19
0.05.02
0.05.46
0.06.29
0.07.12