(12) INTERNATIONAL APPLICATION PUBLISHED UNDER THE PATENT COOPERATION TREATY (PCT)

(19) World Intellectual Property Organization
International Bureau

(43) International Publication Date
10 May 2001 (10.05.2001)

PCT

(10) International Publication Number
WO 01/33300 A2

(51) International Patent Classification[7]: G03F

(21) International Application Number: PCT/US00/30041

(22) International Filing Date: 30 October 2000 (30.10.2000)

(25) Filing Language: English

(26) Publication Language: English

(30) Priority Data:

60/162,392	29 October 1999 (29.10.1999)	US
09/698,317	27 October 2000 (27.10.2000)	US

(71) Applicant: THE UNIVERSITY OF TEXAS AT AUSTIN [US/US]; 3925 West Braker Lane, Suite 1.9A, Mail Code R3500, Austin, TX 78759 (US).

(72) Inventors: CHOI, Byung, Jin; 1634 Jerusalem Drive, Round Rock, TX 78664 (US). SREENIVASAN, Sidlgata, V.; 6900 Fireoak Drive, Austin, TX 78759 (US). JOHNSON, Stephen, C.; 5700 Tapadera Trace Lane, #1015, Austin, TX 78727 (US).

(74) Agent: NAVARRO, Arthur, L; Navarro IP Law Group, P.C., 801 E. Campbell Road, #655, Richardson, TX 75081 (US).

(81) Designated States *(national)*: AE, AL, AM, AT, AU, AZ, BA, BB, BG, BR, BY, CA, CH, CN, CU, CZ, DE, DK, EE, ES, FI, GB, GD, GE, GH, GM, HR, HU, ID, IL, IN, IS, JP, KE, KG, KP, KR, KZ, LC, LK, LR, LS, LT, LU, LV, MD, MG, MK, MN, MW, MX, NO, NZ, PL, PT, RO, RU, SD, SE, SG, SI, SK, SL, TJ, TM, TR, TT, UA, UG, UZ, VN, YU, ZA, ZW.

(84) Designated States *(regional)*: ARIPO patent (GH, GM, KE, LS, MW, MZ, SD, SL, SZ, TZ, UG, ZW), Eurasian patent (AM, AZ, BY, KG, KZ, MD, RU, TJ, TM), European patent (AT, BE, CH, CY, DE, DK, ES, FI, FR, GB, GR, IE, IT, LU, MC, NL, PT, SE), OAPI patent (BF, BJ, CF, CG, CI, CM, GA, GN, GW, ML, MR, NE, SN, TD, TG).

Published:

— *Without international search report and to be republished upon receipt of that report.*

For two-letter codes and other abbreviations, refer to the "Guidance Notes on Codes and Abbreviations" appearing at the beginning of each regular issue of the PCT Gazette.

WO 01/33300 A2

(54) Title: HIGH PRECISION ORIENTATION ALIGNMENT AND GAP CONTROL STAGES FOR IMPRINT LITHOGRAPHY PROCESSES

(57) Abstract: Processes and associated devices for high precision positioning of a template and substrate during imprint lithography includes a calibration system with a course calibration stage and a fine orientation stage capable of maintaining a uniform gap between the template and substrate. The fine orientation stage includes a pair of flexure members having flexure joints for motion about a pivot point intersected by first and second orientation axes. Actuators lengthen or shorten to expand or contract the flexure members. Separation of the template is achieved using a peel-and-pull method that avoids destruction of imprinted features from the substrate.

HIGH PRECISION ORIENTATION ALIGNMENT AND GAP CONTROL STAGES FOR IMPRINT LITHOGRAPHY PROCESSES

TECHNICAL FIELD

The invention relates in general to techniques for small device manufacturing and specifically, to a system, processes and related devices for high precision imprint lithography enabling the manufacture of extremely small features on a substrate such as a semiconductor wafer. More specifically, the invention relates to methods and components for the orientation and alignment of a template about a substrate as well as their separation without destruction of imprinted features.

BACKGROUND OF THE INVENTION

Without limiting the invention, its background is described in connection with a process for the manufacture of sub-100nm devices using imprint lithography.

In manufacturing, lithography techniques that are used for large-scale production include photolithography and other application oriented lithography techniques such as electron beam lithography, ion-beam and x-ray lithography, as examples. Imprint lithography is a type of lithography that differs from these techniques. Recent research has shown that imprint lithography techniques can print features that are smaller than 50nm. As such, imprint lithography has the potential to replace photolithography as the choice for semiconductor manufacturing in the sub-100nm regime. It can be also enable cost effective manufacturing of various kinds of devices including patterned magnetic media for data storage, micro optical devices, MEMS, biological and chemical devices, X-ray optical devices, etc.

Current research in the area of imprint lithography has revealed a need for devices that can perform orientation alignment motions between a template, which contains the imprint image, and a substrate, which receives

the image. Of critical importance is the careful and precise control of the gap between the template and substrate. To be successful, the gap may need to be controlled to within few nanometers across the imprinting area while, at the same time, relative lateral motions between template and substrate must be eliminated. This absence of relative motion leads is also preferred since it allows for a complete separation of the gap control problem from the overlay alignment problem.

For the specific purpose of imprinting, it is necessary to maintain two flat surfaces as close to each other as possible and nearly parallel. This requirement is very stringent as compared to other proximity lithography techniques. Specifically, an average gap of about 100nm with a variation of less than 50nm across the imprinted area is required for the imprint process to be successful at sub 100nm scales. For features that are larger, such as, for example MEMS or micro optical devices, the requirement is less stringent. Since imprint processes inevitably involve forces between the template and the wafer, it is also desirable to maintain the wafer surface as stationary as possible during imprinting and separation processes. Overlay alignment is required to accurately align two adjacent layers of a device that includes multiple lithographically fabricated layers. Wafer motion in the x-y plane can cause loss of registration for overlay alignment.

Prior art references related to orientation and motion control include U.S. Patent No. 4,098,001 entitled *"Remote Center Compliance System"*, U.S. Patent No. 4,202,107 entitled *"Remote Axis Admittance System"*, both by Paul C. Watson, and U.S. Patent No. 4,355,469 entitled *"Folded Remote Center Compliant Device"* by James L. Nevins and Joseph Padavano. These patents relate to fine decoupled orientation stages suitable for aiding insertion and mating maneuvers in robotic machines, docking and assembly equipment. The similarity between these prior art patents and the present invention are in the provision for deformable components that generate rotational motion about a remote center. Such rotational motion is generated, for example, via

deformations of three cylindrical components that connect an operator and a subject in parallel.

The prior art patents do not, however, disclose designs with the necessary high stiffness to avoid lateral and twisting motions. In fact, such lateral motion is desirable in automated assembly to overcome misalignments during the assembly process. Such motion is highly undesirable in imprint lithography since it leads to unwanted overlay errors and could lead to shearing of fabricated structures. Therefore, the kinematic requirements of automated assembly are distinct from the requirements of high precision imprint lithography. The design shown in U.S. Patent 4,355,469 is intended to accommodate larger lateral and rotational error than the designs shown in the first two patents, but this design does not have the capability to constraint undesirable lateral and twisting motions for imprint lithography.

Another prior art method is disclosed in U.S. Patent No. 5,772,905 (the '905 Patent) by Stephen Y. Chou, which describes a lithographic method and apparatus for creating ultra-fine (sub-25 nm) patterns in a thin film coated on a substrate, in which a mold having at least one protruding feature is pressed into a thin film carried on a substrate. The protruding feature in the mold creates a recess of the thin film. First, the mold is removed from the film. The thin film is then processed such that the thin film in the recess is removed exposing the underlying substrate. Thus, the patterns in the mold are replaced in the thin film, completing the lithography. The patterns in the thin film will be, in subsequent processes, reproduced in the substrate or in another material, which is added onto the substrate.

The process of the '905 Patent involves the use of high pressures and high temperatures to emboss features on a material using micro molding. The use of high temperatures and pressures, however, is undesirable in imprint lithography since they result in unwanted stresses being placed on the device. For example, high temperatures cause variations in the expansion of

the template and substrate. Since the template and substrate are often made of different materials, expansion creates serious layer-to-layer alignment problems. To avoid differences in expansion, the same material can be used but this limits material choices and increases overall costs of fabrication. Ideally, imprint lithography could be carried out at room temperatures and low pressures.

Moreover, the '905 Patent provides no details relative to the actual apparatus or equipment that would be used to achieve the process. In order to implement any imprint lithography process in a production setting, a carefully designed system must be utilized. Thus, a machine that can provide robust operation in a production setting is required. The '905 Patent does not teach, suggest or disclose such a system or machine.

Another issue relates to separation of the template from the substrate following imprinting. Typically, due to the nearly uniform contact area at the template-to-substrate interface, a large separation force is needed to pull the layers apart. Such force, however, could lead to shearing and/or destruction of the features imprinted on the substrate resulting in decreased yields.

In short, currently available orientation and overlay alignment methods are unsuitable for use with imprint lithography. A coupling between desirable orientation alignment and undesirable lateral motions can lead to repeated costly overlay alignment errors whenever orientation adjustments are required prior to printing of a field (a field could be for example a 1" by 1" region of an 8" wafer).

Further development of precise stages for robust implementation of imprint lithography is required for large-scale imprint lithography manufacturing. As such, a need exists for an improved imprint lithography process. A way of using imprint lithography as a fabrication technique without high pressures and high temperatures would provide numerous advantages.

SUMMARY OF THE INVENTION

An object of the present invention is to provide a process for imprint lithography for use in cost effective commercial fabrication of semiconductor devices and other various kinds of devices including patterned magnetic media for data storage, micro optical devices, MEMS, biological and chemical devices, and X-ray optical devices, etc.

Another object of the present invention is to provide a process for imprint lithography that avoids the use of high temperatures and high pressures.

Still another object of the present invention is to provide a way of precisely controlling the gap between a lithographed template and a substrate on which desired features from the template are to be transferred enabling a robust process for all imprint lithography techniques.

And still another object of the present invention is to provide a way of separating a template from a substrate following imprinting so that the imprinted features remain intact, the substrate remains stationary, and the separation forces are low.

And yet another object of the present invention is to provide a way of holding a substrate in place during imprint lithography.

These and other objects are achieved by the invention disclosed and claimed herein. The present invention provides processes and associated devices that can be used to achieve high-precision positioning of a template with respect to a substrate suitable for use in an imprint lithography process. The invention includes a pre-calibration stage that controls coarse orientation between the template and substrate without precise orientation alignment. An orientation stage provides fine orientation alignment of the template with

respect to the substrate as well as precise control of the gap between the two. After imprinting, the template is removed from the substrate using a "peel-and-pull" method that ensures imprinted features are not sheared or destroyed. The peel-and-pull method of the invention is achieved without moving the substrate and without using large separation forces.

Accordingly, disclosed in one embodiment is a process for imprint lithography. The process comprises the steps of orienting a template and a substrate in spaced relation to each other so that a gap is created between them. Next, the gap is filled with a low viscosity liquid, which is cured to take on the shape of the gap. The template and substrate are separated so that a pattern is transferred from the template to the substrate leaving desired features on the substrate surface.

Preferably, the curing step is performed at room temperature and low pressures with the low viscosity liquid dispensed in such a way that no bubbles are formed within the gap. Orientation is performed so that the gap is approximately uniform across the template and substrate interface. For curing, the low viscosity liquid is exposed to UV light so that the features of the template are preserved in the liquid after hardening. Any silicon-based monomer or other UV curable organic material can be used for this purpose. Further, a transfer layer can be used between said UV curable material and the substrate to obtain high aspect ratio features.

According to the invention, separation of the template from the substrate is achieved without shearing any of the desired features from substrate surface. During separation, the template is "peeled" and "pulled" from the substrate in a way that prevents the features from being destroyed.

Also disclosed is a system capable of moving and aligning a template with respect to a substrate surface during imprint lithography. The system comprises a pre-calibration stage for course movement and alignment of a

template with respect to a substrate so that a gap is created between the template and the surface of the substrate. An orientation stage is coupled to the pre-calibration stage and configured for fine movement and alignment of the template so that the gap is approximately uniform across the template and substrate interface.

The orientation stage comprises a first orientation sub-stage for moving and aligning the template about a first orientation axis and a second orientation sub-stage for moving and aligning the template about a second orientation axis. The first orientation sub-stage and second orientation sub-stage are coupled to each other so that the axes intersect at a point and the axes lie on the template-substrate interface.

The first orientation sub-stage further comprises a first flexure member having flexible joints for causing the first flexure member to rotate about the first orientation axis. Likewise, the second orientation sub-stage further comprises a second flexure member coupled to the first flexure member and having flexible joints for causing the second flexure member to rotate about the second orientation axis. A support can be coupled to the second orientation sub-stage for securing the template during imprinting. The action of the flexure joints about the first and second orientation axes allows fine movement and alignment of the template with respect to the substrate so that a uniform gap is maintained between the template and substrate.

In one embodiment, four flexure joints are used and predisposed about the first orientation sub-stage to cause its motion about the first orientation axis. Likewise, four flexure joints are used and predisposed about the second orientation sub-stage to cause its motion about the second orientation axis. The flexure joints are configured in such a way so as to cause the first flexure member and second flexure member to pivot about a single point lying in a plane containing both the first orientation axis and second orientation axis.

Further disclosed is an orientation stage for achieving fine movement and alignment of a template with respect to a substrate during imprint lithography. The orientation stage comprises a first flexure member with first and second arms extending therefrom, each arm including a set of flexure joints which provide pivotal motion of the first flexure member about a first orientation axis. A second flexure member is provided having third and fourth arms extending therefrom, each arm including flexure joints, which provide pivotal motion of the second flexure member about a second orientation axis. A support is coupled to the second flexure member and adapted for holding a template in place during imprinting. The first and second flexure members are further adapted to be joined so that a template in the support moves about a point on the template intersected by the first and second orientation axes.

Preferably, the flexure joints of each flexure member are parallel to each other and constructed of a flexible material. In this regard, the arms can be shaped to include a first notch attached to a corresponding flexure member and a second notch for attachment to a fixed object with a rigid body section extending between the first and second notches.

For motion and alignment, the orientation stage can include actuators in operable contact with the flexure members to cause the support to pivot about a pivot point. The actuator can be of the piezo actuator type capable of being shortened and lengthened causing the flexure joints to rotate.

Also disclosed is a vacuum chuck for imprint lithography comprising a chuck body with a substantially flat upper surface having formations extending therefrom for contacting a substrate to be imprinted. A vacuum flow system is provided and extends through the chuck body to the upper surface for creating suction that holds the substrate in contact with the formations. The formations can be pins or grooves according to various embodiments. The vacuum chuck can be manufactured by drilling vacuum flow holes through an optical flat. Also, the upper surface of the optical flat can be lithographically

patterned and subsequently etched into the optical flat to create a desired topography.

According to still another aspect of the invention, disclosed is a process for separating the template from a substrate to leave desired features substantially undamaged on the substrate following imprinting and to lead to low separation forces. The process comprises the steps of applying a first force to begin a peeling separation of the template from the substrate and applying a simultaneous second force to achieve a pulling separation of the template from the substrate. The first and second forces are applied to prevent shearing or destruction of desired features from the substrate and to reduce separation forces.

A technical advantage of the present invention is the achievement of imprint lithography without high temperatures or high pressures.

Another technical advantage of the present invention is that separation of the template from the substrate is achieved without shearing of imprinted features.

Still another technical advantage of the invention is reduced manufacturing cycles since course alignment of the template is achieved once for each batch of die.

BRIEF DESCRIPTION OF THE DRAWINGS

The above objects and advantages as well as specific embodiments are better understood by reference to the following detailed description taken in conjunction with the appended drawings in which:

Figures 1A and 1B show undesirable gap between a template and a substrate;

Figures 2A thru 2E illustrate a version of the imprint lithography process according to the invention;

Figure 3 is a process flow diagram showing the sequence of steps of the imprint lithography process of Figures 2A thru 2E;

Figure 4 shows an assembly of an orientation alignment and gap control system including both a course calibration stage and a fine orientation alignment and gap control stage according to one embodiment of the invention;

Figure 5 is an exploded view of the system of Figure 4;

Figures 6A and 6B show first and second orientation sub-stages, respectively, in the form of first and second flexure members with flexure joints according to one embodiment of the invention;

Figure 7 shows the assembled fine orientation stage with first and second flexure members coupled to each other so that their orientation axes converge on a single pivot point;

Figure 8 is an assembly view of the course calibration stage (or pre-calibration stage) coupled to the fine orientation stage according to one embodiment;

Figure 9 is a simplified diagram of a 4-bar linkage illustrating the motion of flexure joints that result in an orientation axis;

Figure 10 illustrates a side view of the assembled orientation stage with piezo actuators;

Figures 11A and 11 B illustrate configurations for a vacuum chuck according to the invention;

Figure 12 illustrates the method for manufacturing a vacuum chuck of the types illustrates in Figure 11A and 11B;

Figures 13A, 13B and 13C illustrate use of the fine orientation stage to separate a template from a substrate using the "peel-and-pull" method of the present invention; and

Figures 14A, 14B, and 14C illustrate an alternative method of separating a template from a substrate using a piezo actuator.

References in the figures correspond to those in the detailed description unless otherwise indicated.

DETAILED DESCRIPTION OF THE EMBODIMENTS

Without limiting the invention, it is herein described in connection with a system, devices, and related processes for imprinting very small features (sub-100 nanometer (nm) range) on a substrate, such as a semiconductor wafer, using methods of imprint lithography. It should be understood that the present invention can have application to other tasks such as, for example, the manufacture of cost-effective Micro-Electro-Mechanical Systems (or MEMS), as well as various kinds of devices including patterned magnetic media for data storage, micro optical devices, biological and chemical devices, X-ray optical devices, etc.

With reference now to the figures and specifically to Figures 1A and 1B, therein are shown arrangements of a template 12 predisposed with respect to a substrate 20 upon which desired features are to be imprinted using imprint lithography. Specifically, the template 12 includes a surface 14 that has been fabricated to take on the shape of desired features which, in

turn, are transferred to the substrate 20. Between the substrate 20 and the template 12 lies a transfer layer 18, which receives the desired features from the template 12 via an imprinted layer 16. As is well known in the art, the transfer layer 18 allows one to obtain high aspect ratio structures (or features) from low aspect ratio imprinted features.

In Figure 1A, a wedge shaped imprinted layer 16 results so that the template 12 is closer to the substrate 20 at one end of the imprinted layer 16. Figure 1B shows the imprinted layer 16 being too thick. Both of these conditions are highly undesirable. The present invention provides a system, processes and related devices for eliminating the conditions illustrated in Figures 1A and 1B as well as other orientation problems associated with prior art lithography techniques.

Specifically, for the purpose of imprint lithography, it is necessary to maintain the template 12 and substrate 20 as close to each other as possible and nearly parallel. This requirement is very stringent as compared to other proximity lithography techniques such as proximity printing, contact printing, and X-ray lithography, as examples. Thus, for example, for features that are 100nm wide and 100nm deep, an average gap of about 200nm or less with a variation of less than 50nm across the imprinting area of the substrate 20 is required for the imprint lithography process to be successful. The present invention provides a way of controlling the spacing between the template 12 and substrate 20 for successful imprint lithography given such tight and precise gap requirements.

Figures 2A thru 2E illustrate the process, denoted generally as 30, of imprint lithography according to the invention. In Figure 2A, the template 12 is orientated in spaced relation to the substrate 20 so that a gap 31 is formed in the space separating the template 12 and substrate 20. The surface 14 of template 12 is treated with a thin layer 13 that lowers the template surface energy and assists in separation of the template 12 from the substrate 20.

The manner of orientation including devices for controlling of the gap 31 between the template 12 and substrate 20 are discussed below. Next, in Figure 2B, the gap 31 is filled with a substance 40 that conforms to the shape of the treated surface 14. Essentially, the substance 40 forms the imprinted layer 16 shown in Figures 1A and 1B. Preferably, the substance 40 is a liquid so that it fills the space of gap 31 rather easily without the use of high temperatures and the gap can be closed without requiring high pressures.

A curing agent 32 is applied to the template 12 causing the substance 40 to harden and assume the shape of the space defined by gap 31 between the template 12 and substrate 20. In this way, desired features 44 (Figure 2D) from the template 12 are transferred to the upper surface of the substrate 20. A transfer layer 18 is provided directly on the upper surface of the substrate 20 which facilitates the amplification of features transferred from the template 12 onto the substrate 20 to generate high aspect ratio features.

In Figure 2D, the template 12 is removed from the substrate 20 leaving the desired features 44 thereon. The separation of the template 12 from the substrate 20 must be done so that desired features 44 remain intact without shearing or tearing from the surface of the substrate 20. The present invention provides a method and associated system for peeling and pulling (referred to herein as the "peel-and-pull" method) the template 12 from the substrate 20 following imprinting so the desired feature 44 remain intact.

Finally, in Figure 2E, the features 44 transferred from the template 12 to the substrate 20 are amplified in vertical size by the action of the transfer layer 18 as is known in the use of bilayer resist processes. The resulting structure can be further processed to complete the manufacturing process using well-known techniques. Figure 3 summarizes the imprint lithography process, denoted generally as 50, of the present invention in flow chart form. Initially, at step 52, course orientation of a template and a substrate is performed so that a rough alignment of the template and substrate is

achieved. The advantage of course orientation at step 52 is that it allows pre-calibration in a manufacturing environment where numerous devices are to be manufactured with efficiency and with high production yields. For example, where the substrate comprises one of many die on a semiconductor wafer, course alignment (step 52) can be performed once on the first die and applied to all other dies during a single production run. In this way, production cycle times are reduced and yields are increased.

Next, at step 54, the spacing between the template and substrate is controlled so that a relatively uniform gap is created between the two layers permitting the type of precise orientation required for successful imprinting. The present invention provides a device and system for achieving the type of orientation (both course and fine) required at step 54. At step 56, a liquid is dispensed into the gap between the template and substrate. Preferably, the liquid is a UV curable organosilicon solution or other organic liquids that become a solid when exposed to UV light. The fact that a liquid is used eliminates the need for high temperatures and high pressures associated with prior art lithography techniques.

At step 58, the gap is closed with fine orientation of the template about the substrate and the liquid is cured resulting in a hardening of the liquid into a form having the features of the template. Next, the template is separated from the substrate, step 60, resulting in features from the template being imprinted or transferred onto the substrate. Finally, the structure is etched, step 62, using a preliminary etch to remove residual material and a well-known oxygen etching technique to etch the transfer layer.

As discussed above, requirements for successful imprint lithography include precise alignment and orientation of the template with respect to the substrate to control the gap in between the template and substrate. The present invention provides a system capable of achieving precise alignment and gap control in a production style fabrication process. Essentially, the

system of the present invention provides a pre-calibration stage for performing a preliminary and course alignment operation between the template and substrate surface to bring the relative alignment to within the motion range of a fine movement orientation stage. This pre-calibration stage is required only when a new template is installed into the machine (also sometimes known as a stepper) and consists of a base plate, a flexure component, and three micrometers or high resolution actuators that interconnect the base plate and the flexure component.

With reference to Figure 4, therein is shown an assembly of the system, denoted generally as 100, for calibrating and orienting a template, such as template 12, about a substrate to be imprinted, such as substrate 20. The system 100 can be utilized in a machine, such as a stepper, for mass fabrication of devices in a production type environment using the imprint lithography processes of the present invention. As shown, the system 100 is mounted to a top frame 110 which provides support for a housing 120 which contains the pre-calibration stage for course alignment of a template 150 about a substrate (not shown in Figure 4).

The housing 120 is seen coupled to a middle frame 114 with guide shafts 112a, 112b attached to the middle frame 114 opposite the housing 120. In one embodiment, three (3) guide shafts are used (the back guide shaft is not visible in Figure 4) to provide a support for the housing 120 as it slides up and down during vertical translation of the template 150. This up-and-down motion of the housing 120 is facilitated by sliders 116a and 116b which attach to corresponding guide shafts 112a, 112b about the middle frame 114.

System 100 includes a disk-shaped base plate 122 attached to the bottom portion of the housing 120 which, in turn, is coupled to a disk-shaped flexure ring 124 for supporting the lower placed orientation stage comprised of first flexure member 126 and second flexure member 128. The operation and configuration of the flexure members 126, 128 are discussed in detail below.

In Figure 5, the second flexure member 128 is seen to include a template support 130, which holds the template 150 in place during the imprinting process. Typically, the template 150 comprises a piece of quartz with desired features imprinted on it, although other template substances may be used according to well-known methods.

As shown in Figure 5, three (3) actuators 134a, 134b, 134c are fixed within the housing 120 and operable coupled to the base plate 122 and flexure ring 124. In operation, the actuators 134a, 134b, 134c would be controlled such that motion of the flexure ring 124 is achieved. This allows for coarse pre-calibration. The actuators 134a, 134b, 134c can also be high resolution actuators which are equally spaced apart about the housing 120 permitting the additional functionality of very precise translation of the ring 124 in the vertical direction to control the gap accurately. In this way, the system 100 is capable of achieving coarse orientation alignment and precise gap control of the template 150 with respect to a substrate to be imprinted.

The system 100 of the present invention provides a mechanism that enables precise control of the template 150 so that precise orientation alignment is achieved and a uniform gap is maintained by the template with respect to a substrate surface. Additionally, the system 100 provides a way of separating the template 150 from the surface of the substrate following imprinting without shearing of features from the substrate surface. The precise alignment, gap control and separation features of the present invention are facilitated mainly by the configuration of the first and second flexure members, 126 and 128, respectively.

With reference to Figures 6A and 6B, therein are shown the first and second flexure members, 126 and 128, respectively, in more detail. Specifically, the first flexure member 126 is seen to include a plurality of flexure joints 160 coupled to corresponding rigid bodies 164, 166 which form part of arms 172, 174 extending from a frame 170. The flexure frame 170 has

an opening 182, which permits the penetration of a curing agent, such as UV light, to reach the template 150 when held in support 130. As shown, four (4) flexure joints 160 provide motion of the flexure member 126 about a first orientation axis 180. The base 170 of the first flexure member 126 provides a coupling mechanism for joining with the second flexure member 128 as illustrated in Figure 7.

Likewise, the second flexure member 128 includes a pair of arms 202, 204 extending from a frame 206 and including flexure joints 162 and corresponding rigid bodies 208, 210 which are adapted to cause motion of the flexure member 128 about a second orientation axis 200. The template support 130 is integrated with the frame 206 of the second flexure member 128 and, like frame 182, has an opening 212 permitting a curing agent to reach a template 150 when held by support 130.

In operation, the first flexure member 126 and second flexure member 128 are joined as shown in Figure 7 to form the orientation stage 250 of the present invention. Braces 220, 222 are provided in order to facilitate joining of the two pieces such that the first orientation axis 180 and second orientation axis 200 are orthogonal to each other and intersect at a pivot point 252 at the template-substrate interface 254. The fact that first orientation axis 180 and second orientation axis 200 are orthogonal and lie on interface 254 provide the fine alignment and gap control advantages of the invention. Specifically, with this arrangement, a decoupling of orientation alignment from layer-to-layer overlay alignment is achieved. Furthermore, as explained below, the relative position of the first orientation axis 180 and second orientation axis 200 provides an orientation stage 250 that can be used to separate the template 150 from a substrate without shearing of desired features so that features transferred from the template 150 remain intact on the substrate.

Referring to Figures 6A, 6B and 7, the flexure joints 160 and 162 are notched shaped to provide motion of the rigid bodies 164, 166, 208, 210

about pivot axes that are located along the thinnest cross section of the notches. This configuration provides two (2) flexure-based sub-systems for a fine decoupled orientation stage 250 having decoupled compliant motion axes 180, 200. The two flexure members 126, 128 are assembled via mating of surfaces such that motion of the template 150 occurs about the pivot point 252 eliminating "swinging" and other motions that would destroy or shear imprinted features from the substrate. Thus, the fact that the orientation stage 250 can precisely move the template 150 about a pivot point 252 eliminates shearing of desired features from a substrate following imprint lithography.

A system, like system 100, based on the concept of the flexure components has been developed for the imprinting process described above in connection with Figures 2A thru 2E. One of many potential application areas is the gap control and overlay alignment required in high-resolution semiconductor manufacturing. Another application may be in the area of single layer imprint lithography for next generation hard disk manufacturing. Several companies are considering such an approach to generate sub-100nm dots on circular magnetic media. Accordingly, the invention is potentially useful in cost effective commercial fabrication of semiconductor devices and other various kinds of devices including patterned magnetic media for data storage, micro optical devices, MEMS, biological and chemical devices, X-ray optical devices, etc.

Referring to Figure 8, during operation of the system 100, a Z-translation stage (not shown) controls the distance between the template 150 and substrate without providing orientation alignment. A pre-calibration stage 260 performs a preliminary alignment operation between the template 150 and wafer surfaces to bring the relative alignment to within the motion range limits of the orientation stage 250. Pre-calibration is required only when a new template is installed into the machine.

The pre-calibration stage 260 is made of a base plate 122, a flexure ring 124, and actuators 134a, 134b, 134c (collectively 134) that interconnect the base plate 122 and the flexure ring 124 via load cells 270 that measure the imprinting and separation forces in Z-direction. The actuators 134a, 134b, 134c can be three differential micrometers capable of expanding and contracting to cause motion of the base plate 122 and the flexure ring 124. Alternatively, the actuators 134 can be a combination of micrometer and piezo or tip-type piezo actuators such as those offered by Physik Instruments, Inc.

Pre-calibration of a template 150 with respect to a substrate can be performed by adjusting the actuators 134 while visually inspecting the monochromatic light induced fringe pattern appearing at the interface of the template lower surface and the substrate top surface. Using differential micrometers, it has been demonstrated that two flat surfaces can be oriented in parallel within 200nm error across 1 inch using fringes obtained from green light.

With reference to Figure 9, therein is shown a flexure model, denoted generally as 300, useful in understanding the principles of operation for a fine decoupled orientation stage, such as orientation stage 250. The flexure model 300 includes four (4) parallel joints - Joints 1, 2, 3 and 4 - that provide a four-bar-linkage system in its nominal and rotated configurations. The angles ($_1$ and $_2$) between the line 310 passing through Joints 1 and 2 and the line 312 passing thru Joints 3 and 4, respectively, are selected so that the compliant alignment axis lies exactly on the template-wafer interface 254 within high precision machining tolerances (a few microns). For fine orientation changes, the rigid body 314 between Joints 2 and 3 rotates about an axis that is depicted by Point C. The rigid body 314 is representative of rigid bodies 170 and 206 of the flexure members 126 and 128, respectively.

Since a similar second flexure component is mounted orthogonally onto the first one, as shown in Figure 7, the resulting orientation stage 250

has two decoupled orientation axes that are orthogonal to each other and lie on the template-substrate interface 254. The flexure components can be readily adapted to have openings so that a curing UV light can pass through the template 150 as required in lithographic applications.

The orientation stage 250 is capable of fine alignment and precise motion of the template 150 with respect to a substrate and, as such, is one of the key components of the present invention. The orientation adjustment, which the orientation stage 250 provides ideally, leads to negligible lateral motion at the interface and negligible twisting motion about the normal to the interface surface due to selectively constrained high structural stiffness. The second key component of the invention is the flexure-based members 126, 128 with flexure joints 160, 162 which provide for no particle generation and which can be critical for the success of imprint lithography processes.

This invention assumes the availability of the absolute gap sensing approach that can measure small gaps of the order of 200nm or less between the template 150 and substrate with a resolution of a few nanometers. Such gap sensing is required as feedback if gap control is to actively by use of actuators.

Figure 10 shows a configuration of the orientation stage with piezo actuators, denoted generally as 400. The configuration 400 generates pure tilting motions with no lateral motions at template-substrate interface. Therefore, a single overlay alignment step will allow the imprinting of a layer on the entire wafer. For overlay alignment, coupled motions between the orientation and lateral motions lead to inevitable disturbances in X-Y alignment, which requires a complicated field-to-field overlay control loop.

Preferably, the orientation stage 250 possesses high stiffness in the directions where side motions or rotations are undesirable, and lower stiffness in directions where necessary orientation motions are desirable, which leads

to a selectively compliant device. Therefore, the orientation stage 250 can support relatively high loads while achieving proper orientation kinematics between template 150 and the substrate.

With imprint lithography, a requirement exists that the gap between two extremely flat surfaces be kept uniform. Typically, the template 150 is made from optical flat glass using electron beam lithography to ensure that it is substantially flat on the bottom. The wafer substrate, however, can exhibit a "potato chip" effect resulting in small micron-scale variations on its topography. The present invention provides a device, in the form of a vacuum chuck 478 (as shown in Figure 12), to eliminate variations across a surface of the wafer substrate that can occur during imprinting.

Vacuum chuck 478 serves two primary purposes. First, vacuum chuck 478 is utilized to hold the substrate in place during imprinting and to ensure that the substrate stays flat during the imprinting process. Additionally, vacuum chuck 478 ensures that no particles are present on the back of the substrate during processing. This is important to imprint lithography as particles can create problems that ruin the device and decrease production yields. Figure 11A and 11B illustrate variations of a vacuum chuck suitable for these purposes according to two embodiments.

In Figure 11A, a pin-type vacuum chuck 450 is shown as having a large number of pins 452 that eliminates "potato chip" effect as well as other deflections on the substrate during processing. A vacuum channel 454 is provided as a means of pulling on the substrate to keep it in place. The spacing between the pins 452 is maintained so the substrate will not bow substantially from the force applied through the vacuum channel 454. At the same time, the tip of the pins 452 are small enough to reduce the chance of particles settling on top of it.

Thus, with a pin-type vacuum chuck 450, a large number of pins 452 are used to avoid local bowing of the substrate. At the same time, the pin heads should be very small since the likelihood of the particle falling in between the gaps between the pins 452 can be high avoiding undesirable changing the shape of the substrate itself.

Figure 11B shows a groove-type vacuum chuck 460 with grooves 462 across its surface. The multiple grooves 462 perform a similar function to the pins 454 of the pin-type vacuum chuck 450. As shown, the grooves 462 can take on either a wall shape 464 or have a smooth curved cross section 466. The cross section of the grooves 462 for the groove-type vacuum chuck 462 can be adjusted through an etching process. Also, the space and size of each groove can be as small as hundreds of microns. Vacuum flow to each of the grooves 462 can be provided typically through fine vacuum channels across multiple grooves that run in parallel with respect to the chuck surface. The fine vacuum channels can be made along with grooves through an etching process.

Figure 12 illustrates the manufacturing process for both of the pin-type vacuum chuck 450 and the groove-type vacuum chuck 460. Using optical flats 470, no additional grinding and polishing steps are necessary for this process. Drilling at specified places of the optical flat 470 produces vacuum flow holes 472 which are then masked and patterned 474 before etching 476 to produce the desired feature - either pins or grooves - on the upper surface of the optical flat. The surface can then be treated 479 using well-known methods.

As discussed above, separation of the template 150 from the imprinted layer is a critical and important final step of imprint lithography. Since the template 150 and substrate are almost perfectly oriented, the assembly of the template 150, imprinted layer, and substrate leads to a uniform contact between near optical flats, which usually requires a large separation force. In

the case of a flexible template or substrate, the separation can be merely a "peeling process". However, a flexible template or substrate is undesirable from the point of view of high-resolution overlay alignment. In case of quartz template and silicon substrate, the peeling process cannot be implemented easily. The separation of the template from an imprinted layer can be performed successfully either by one of the two following schemes or the combination of them as illustrated by Figures 13A, 13B, and 13C.

For clarity, reference numerals 12, 18 and 20 will be used in referring to the template, transfer layer and substrate, respectively, in accordance with Figures 1A and 1B. After UV curing of the substrate 20, either the template 12 or substrate 20 can be tilted intentionally to induce a wedge 500 between the template 12 and transfer layer 18 on which the imprinted layer resides. The orientation stage 250 of the present invention can be used for this purpose while the substrate 20 is held in place by a vacuum chuck 478. The relative lateral motion between the template 12 and substrate 20 can be insignificant during the tilting motion if the tilting axis is located close to the template-substrate interface. Once the wedge 500 between the template 12 and substrate 200 is large enough, the template 12 can be separated from the substrate 20 completely using Z-motion. This "peel and pull" method results in the desired features 44 being left intact on the transfer layer 18 and substrate 20 without undesirable shearing.

An alternative method of separating the template 12 from the substrate 20 without destroying desired features is illustrated by Figure 14A, 14B, 14C. One or more piezo actuator(s) 502 are installed adjacent to the template, and a relative tilt can be induced between the template 12 and substrate 20 (Figure 14A). The free end of the piezo actuator 502 is in contact with the substrate 20 so that when the actuator 502 is enlarged (Figure 14B), the template 12 can be pushed away from the substrate 20. Combined with a Z-motion between the template 12 and substrate 20 (Figure 14C), such a local deformation can induce a "peeling" and "pulling" effect between the template

12 and substrate 20. The free end side of the piezo actuator 502 can be surface treated similar to the treatment of the lower surface of the template 12 in order to prevent the imprinted layer from sticking to the surface of the piezo actuator 502.

In summary, the present invention discloses a system, processes and related devices for successful imprint lithography without requiring the use of high temperatures or high pressures. With the present invention, precise control of the gap between a template and a substrate on which desired features from the template are to be transferred is achieved. Moreover, separation of the template from the substrate (and the imprinted layer) is possible without destruction or shearing of desired features. The invention also discloses a way, in the form of suitable vacuum chucks, of holding a substrate in place during imprint lithography.

While this invention has been described with a reference to illustrative embodiments, the description is not intended to be construed in a limiting sense. Various modifications and combinations of the illustrative embodiments as well as other embodiments of the invention, will be apparent to persons skilled in the art upon reference to the description. It is, therefore, intended that the appended claims encompass any such modifications or embodiments.

What is claimed is:

1. A process for imprint lithography comprising the steps of:

orienting a lithographed template and a substrate in spaced relation to each other so that a gap is created between said template and said substrate;

filling said gap with UV curable liquid that could be dispensed either before or after establishing the gap;

curing said UV curable liquid within said gap; and

separating said template and said substrate so that a pattern is transferred from said template to said substrate leaving desired features thereon.

2. The process of claim 1 further comprising the step of treating the template with a low surface energy monolayer to assist in separation;

3. The process of claim 1 wherein said filling step is performed by controllably dispensing said UV curable liquid between the template and substrate, or spin coating said UV curable liquid on the substrate.

4. The process of claim 3 wherein said liquid dispensing step is performed without forming bubbles within said gap.

5. The process of claim 3 wherein said liquid dispensing step is performed at low pressures.

6. The process of claim 1 wherein said orienting step is performed so that the gap is approximately uniform across said template and said substrate.

7. The process of claim 1 wherein said curing step is performed by exposing said low viscosity liquid to UV light that causes said UV curable liquid to conform to the shape of said template.

8. The process of claim 1 wherein said filling step is performed by dispensing a silicon-based monomer or other organic liquids within said gap.

9. The process of claim 1 wherein said separating step is performed without shearing any of said desired features from said substrate.

10. The process of claim 1 wherein said separating step is performed so that said desired features are transferred to a transfer layer interspersed between said template and said substrate.

11. The process of claim 1 wherein said separating step further comprises the step of peeling and pulling said template from said substrate.

12. For an imprint lithography process, a system capable of controlling the relative orientation and the relative gap between the template and substrate;

by allowing high-resolution orientation to be performed about axes that lie at the template-substrate interface

by allowing high resolution translation normal to the template-substrate interface

by processing high stiffness in directions that can result in shearing of imprinted structures.

13. The system of claim 12 capable of calibrating and orienting a template with respect to a substrate surface to be imprinted comprising:

a pre-calibration stage for course movement and alignment of a template with respect to a substrate surface so that a gap is created between said template and said substrate surface; and

an orientation stage used in conjunction with said pre-calibration stage for fine movement and alignment of said template so that said gap is approximately uniform across that portion of said template that lies over said substrate surface.

14. The system of claim 13 wherein said orientation stage further comprises:

a first orientation sub-stage for moving and aligning said template about a first orientation axis; and

a second orientation sub-stage for moving and aligning said template about a second orientation axis.

15. The system of claim 14 wherein said first orientation sub-stage and said second orientation sub-stage are arranged so that said first orientation axis is orthogonal to said second orientation axis.

16. The system of claim 14 wherein said first orientation sub-stage and said second orientation sub-stage are further arranged so that said first orientation axis and said second orientation axis lie along template-substrate interface.

17. The system of claim 14 wherein:

said first orientation sub-stage further comprises a first flexure member having a first plurality of flexible joints for causing said first flexure member to rotate about said first orientation axis; and

said second orientation sub-stage further comprises a second flexure member coupled to said first flexure member and having a second plurality of flexible joints for causing said second flexure member to rotate about said second orientation axis.

18. The system of claim 17 wherein said second orientation sub-stage further includes a support for securing said template.

19. The system of claim 17 wherein said first plurality of flexible joints include four flexure joints predisposed about said first orientation sub-stage to cause its motion about said first orientation axis.

20. The system of claim 17 wherein said second plurality of flexible joints include four flexure joints predisposed about said second orientation sub-stage to cause its motion about said second orientation axis.

21. The system of claim 17 wherein said first flexure member and said second flexure member are configured to cause said first orientation flexure member and said second orientation member to pivot about a single point of said template when secured in said support, said single point lying in a plane containing both said first orientation axis and said second orientation axis.

22. The system of claim 13 further comprising openings within said pre-calibration stage and orientation stage, respectively, for permitting UV light to reach said template-substrate interface.

23. The system of claim 13 further comprising:

housings supporting both said pre-calibration stage and said orientation stage; and

a plurality of actuators extending from said housings for causing said pre-calibration and orientation stages to move.

24. The system of claim 13 wherein said plurality of actuators comprise three high-resolution actuators equally spaced apart about said housing of said pre-calibration stage.

25. The system of claim 23 wherein said pre-calibration stage comprises first and second disk-shaped members, said first disk-shaped member coupled to an open end of said housing, said second disk-shaped member coupled to said first disk-shaped member opposite said open end, said first disk-shaped member including openings through which said three high resolution actuators extend to said second disk-shaped member.

26. The system of claim 25 wherein said orientation stage is coupled to said second disk-shaped member.

27. An orientation stage for achieving fine movement and alignment of a template in an imprint lithography process, said orientation stage comprising:

a first flexure member with first and second arms extending therefrom, each arm including a first set of flexure joints which provide pivotal motion of said first flexure member about a first orientation axis;

a second flexure member having third and fourth arms extending therefrom, each arm including a second set of flexure joints which provide pivotal motion of said second flexure member about a second orientation axis; and

a support coupled to said second flexure member and adapted for holding a template in place during imprinting;

wherein said first and second flexure members are further adapted to be joined so that a template in said support moves about a pivot point intersected by said first and second orientation axis.

28. The orientation stage of claim 27 wherein:

said first set of flexure joints are parallel to each other; and

said second set of flexure joints are parallel to each other.

29. The orientation stage of claim 27 wherein said first and second set of flexure joints are constructed of a flexible material.

30. The orientation stage of claim 27 wherein each of said first, second, third and fourth arms comprise:

a first notch attached to a corresponding flexure member;

a second notch for attachment to a fixed object; and

a rigid body section extending between said first and second notches.

31. The orientation stage of claim 27 further comprising actuators in operable contact with said flexure member to cause said support to pivot about said pivot point.

32. The orientation stage of claim 31 wherein said actuators are piezo actuators.

33. The orientation stage of claim 32 wherein said piezo actuators are capable of being shortened and lengthened causing said flexure joints to rotate in both directions.

34. A vacuum chuck for imprint lithography comprising:

a chuck body having formations extending from it leading to a substantially flat upper surface for contacting a substrate to be imprinted; and

a vacuum flow system extending through said body to said upper surface for creating suction that would hold said substrate in contact with said formations.

35. The vacuum chuck of claim 34 wherein said formations comprise a plurality of pins or holes.

36. The vacuum chuck of claim 35 wherein the size and spacing between said plurality of pins or holes is optimized based on a set of imprint lithography parameters.

37. The vacuum chuck of claim 35 wherein each of said plurality of pins is approximately 0.5 mm in diameter, or spacing between said holes is approximately 0.5 mm.

38. The vacuum chuck of claim 35 wherein the spacing between said plurality of pins is approximately 2 mm, or the diameter of said holes is approximately 2 mm.

39. The vacuum chuck of claim 34 wherein said formations comprise a plurality of fine grooves circling the area spanned by said upper surface.

40. The vacuum chuck of claim 39 wherein each of said plurality of fine grooves forms a straight wall.

41. The vacuum chuck of claim 39 wherein each of said plurality of fine grooves has a smooth curved cross section.

42. The vacuum chuck of claim 39 wherein said vacuum flow system comprises a plurality of vacuum flow holes extending to said plurality of grooves.

43. The vacuum chuck of claim 39 wherein said vacuum flow system comprises a plurality of fine vacuum flow channels extending through multiple grooves in a direction parallel to said upper surface.

44. The vacuum chuck of claim 34 wherein said chuck body is fabricated from an optical flat.

45. A method of manufacturing a vacuum chuck comprising the steps of:
drilling a plurality of vacuum flow holes through an optical flat;
applying a patterned mask to an upper surface of said optical flat; and
etching said optical flat to form desired formations on said upper surface.

46. The method of claim 45 further comprising the step of treating said upper surface to ensure that said desired formations are clean and rigid.

47. The method of claim 45 wherein the step of applying a patterned mask is performed so that a pin or hole pattern is applied to said upper surface.

48. The method of claim 45 wherein the step of applying a patterned mask is performed so that said a fine groove pattern is applied to said upper surface.

49. The method of claim 48 wherein the step of etching is performed so that said groove pattern leaves formation that consist of straight walls.

50. The method of claim 48 wherein the step of etching is performed so that said groove pattern leaves formations that consist of smooth curved walls.

51. During imprint lithography that transfers a pattern from a template to a substrate, a process for separating the template from the substrate to leave desired features substantially undamaged on said substrate to not move the substrate, and to reduce separation forces comprising the steps of:

applying a first force to begin a peeling separation of the template from the substrate; and

applying a second force to achieve a pulling separation of the template from the substrate;

wherein said first and second forces are applied to prevent shearing of desired features from said substrate following imprint lithography.

52. The process of claim 51 wherein said step of peeling separation is achieved by inducing a wedge-shaped separation at one end of the template-substrate interface.

53. The process of claim 52 wherein said wedge-shaped separation is achieved by holding said substrate in place and tilting said template.

54. The process of claim 52 wherein said wedge-shaped separation is achieved by holding said template in place and tilting said substrate.

55. The process of claim 52 wherein said wedge-shaped separation is achieved by the additional steps of:

inserting an actuator between the substrate and template; and

enlarging the actuator to push the template away from the substrate.

56. The process of claim 55 further comprising the step of coating said actuator to prevent sticking of the substrate to the actuator.

57. A template holder for imprint lithography comprising a frame that can make surface contact with regions of the side walls of the template and the regions of the back all of the template to allow holding of the template during imprint and separation processes without substantially distorting the template.

58. The template holder of claim 57 further comprising the ability to hold the template using one or combinations of mechanical clamping, vacuum force and electro-static methods.

59. The template holder of claim 58 wherein said mechanical clamping of is enabled using setscrews, piezo-actuators, pneumatic or hydraulic actuators in conjunction with compliant elements that provide surface contact.

60. The template holder of claim 57 wherein the side walls are wedged to form curved shaped side walls that support both imprint and separation forces.

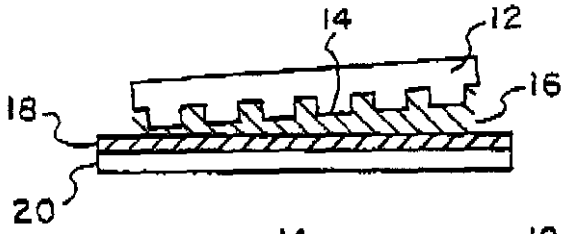

FIG. 1A

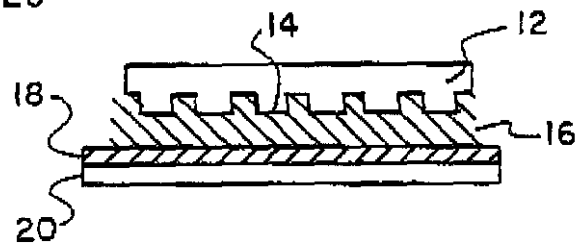

FIG. 1B

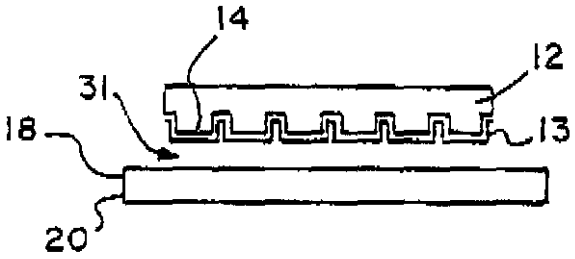

FIG. 2A

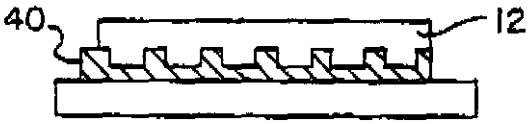

FIG. 2B

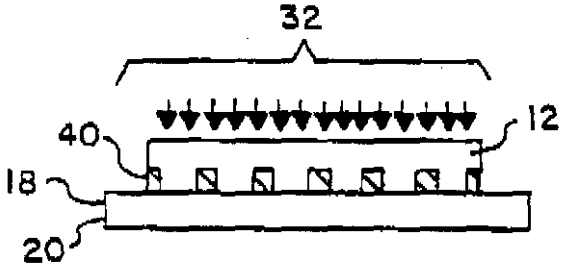

FIG. 2C

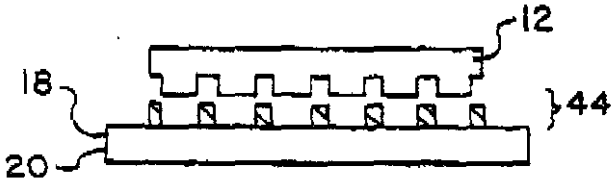

FIG. 2D

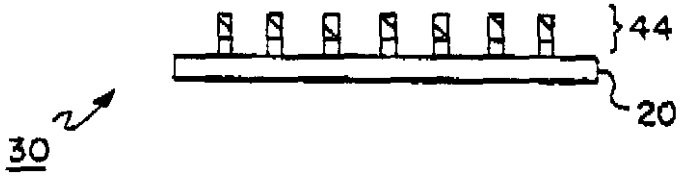

FIG. 2E

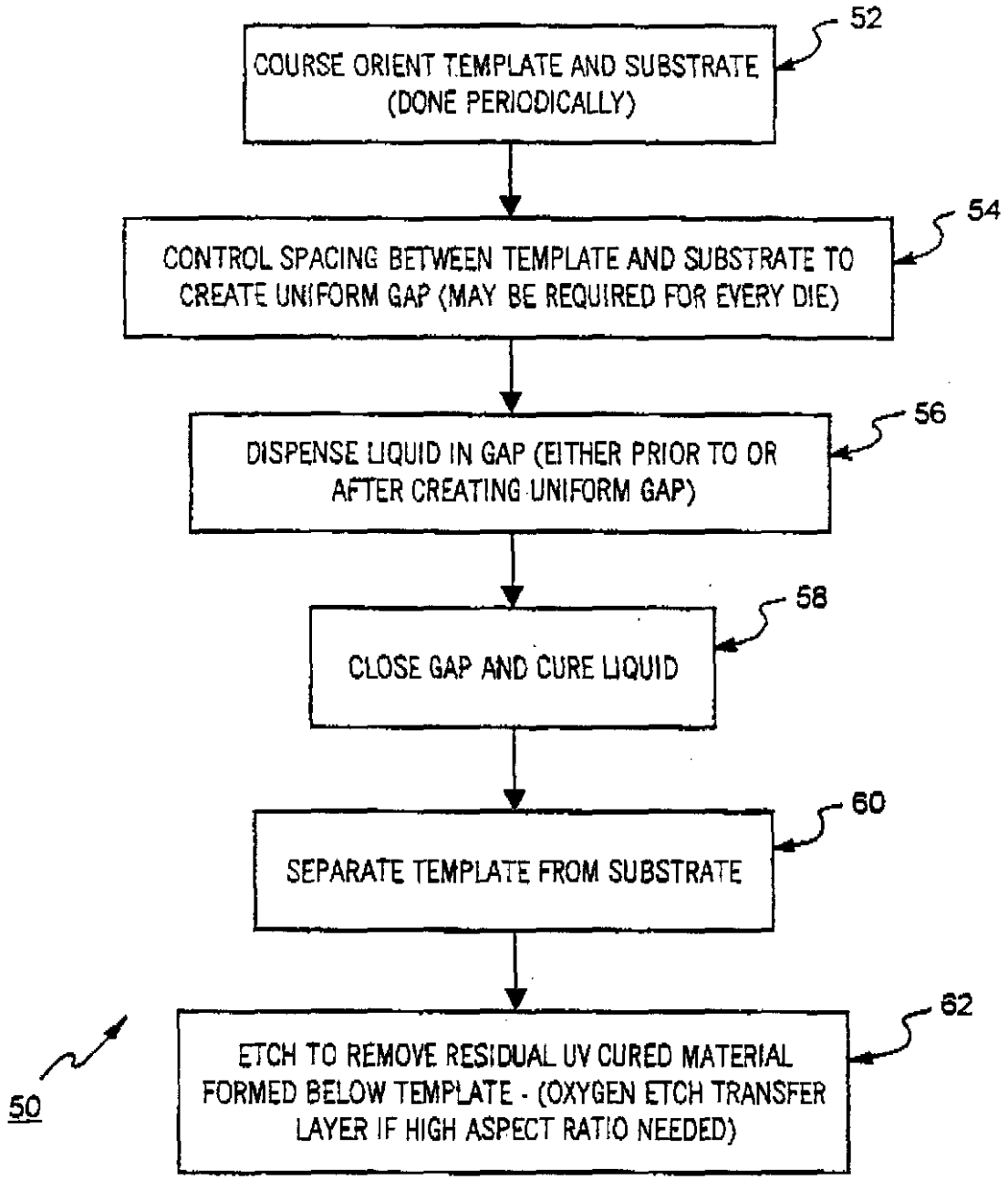
COURSE ORIENT TEMPLATE AND SUBSTRATE (DONE PERIODICALLY)
52
CONTROL SPACING BETWEEN TEMPLATE AND SUBSTRATE TO CREATE UNIFORM GAP (MAY BE REQUIRED FOR EVERY DIE)
54
DISPENSE LIQUID IN GAP (EITHER PRIOR TO OR AFTER CREATING UNIFORM GAP)
56
CLOSE GAP AND CURE LIQUID
58
SEPARATE TEMPLATE FROM SUBSTRATE
60
ETCH TO REMOVE RESIDUAL UV CURED MATERIAL FORMED BELOW TEMPLATE - (OXYGEN ETCH TRANSFER LAYER IF HIGH ASPECT RATIO NEEDED)
62
50

FIG. 3

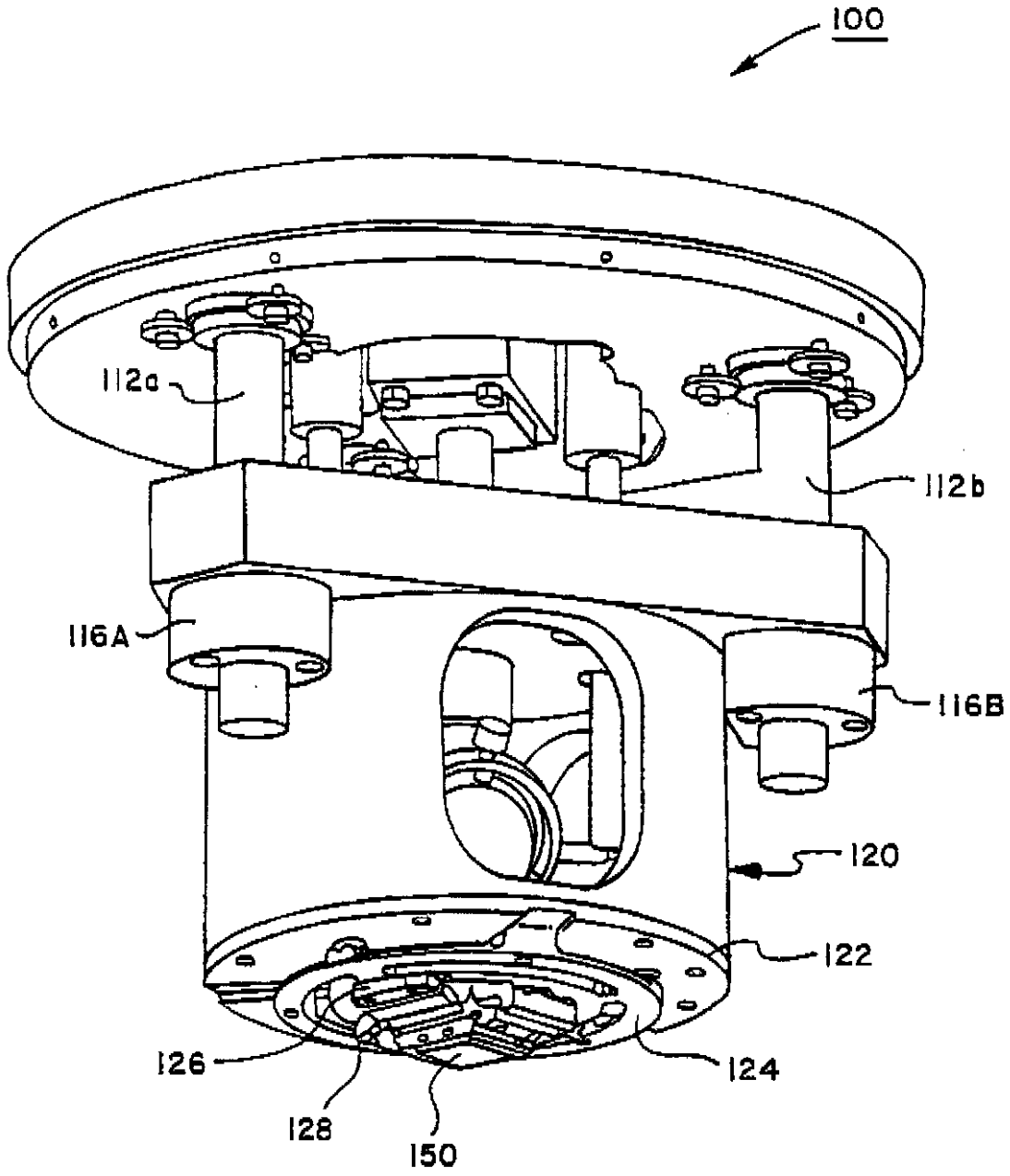

FIG. 4

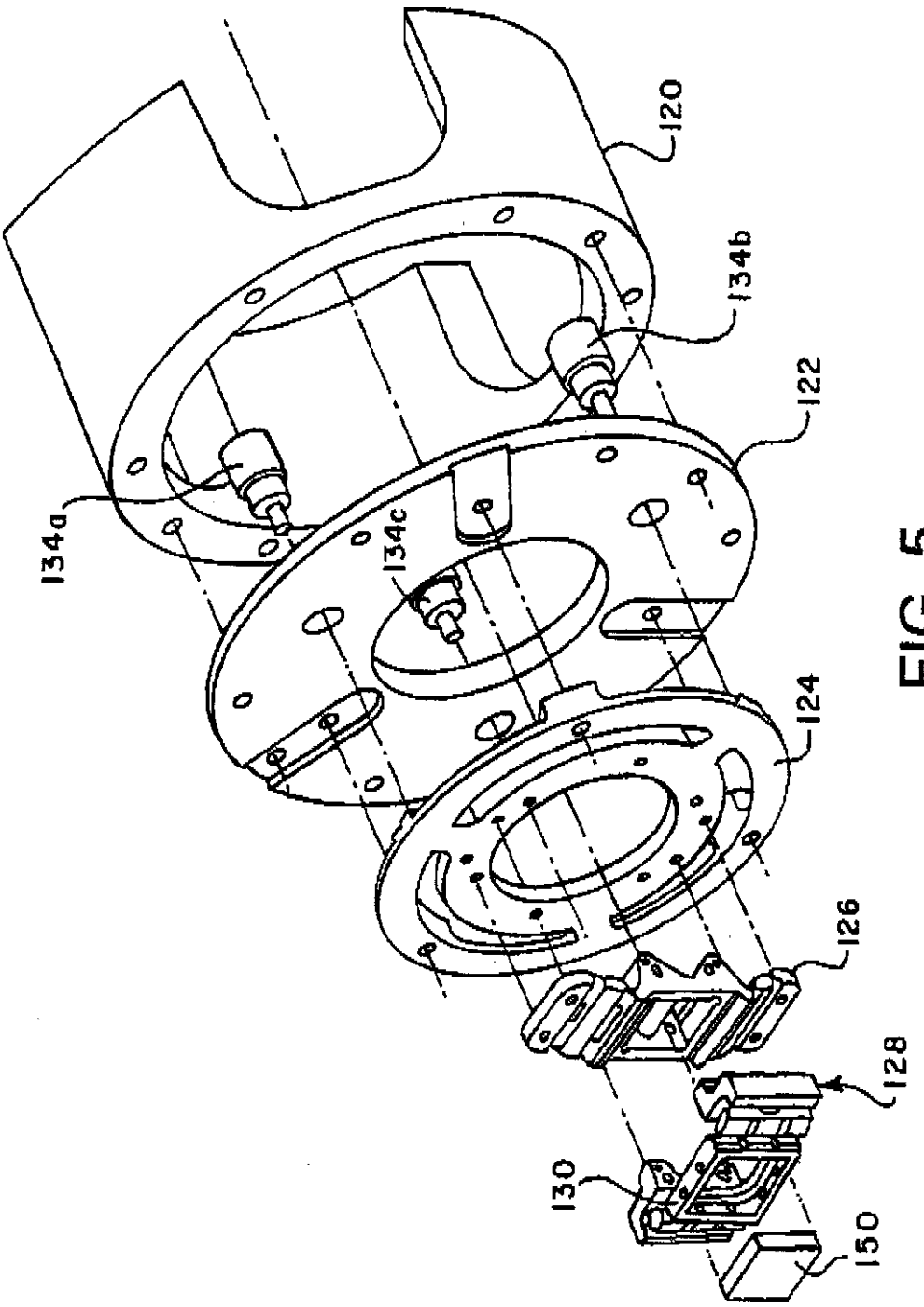

FIG. 5

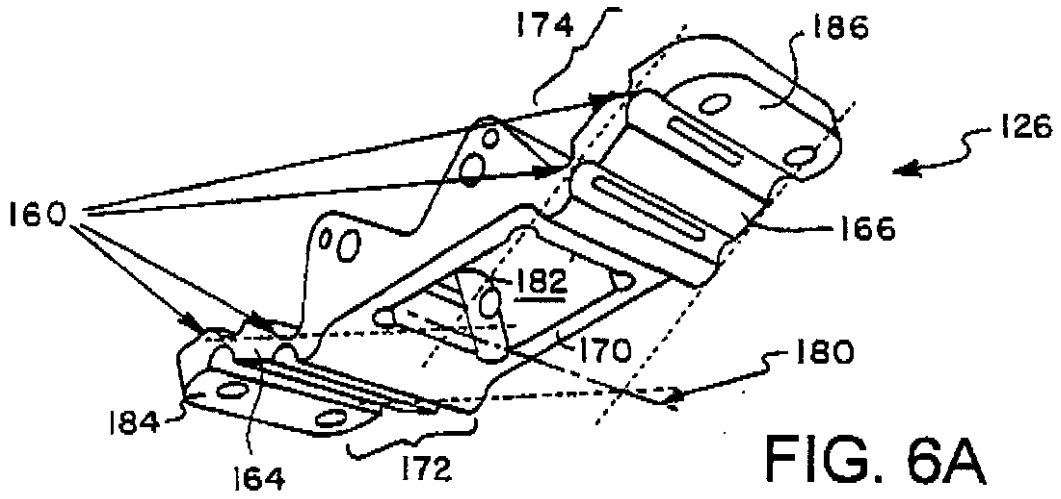
174
186
126
160
166
182
170
180
184
164
172

FIG. 6A

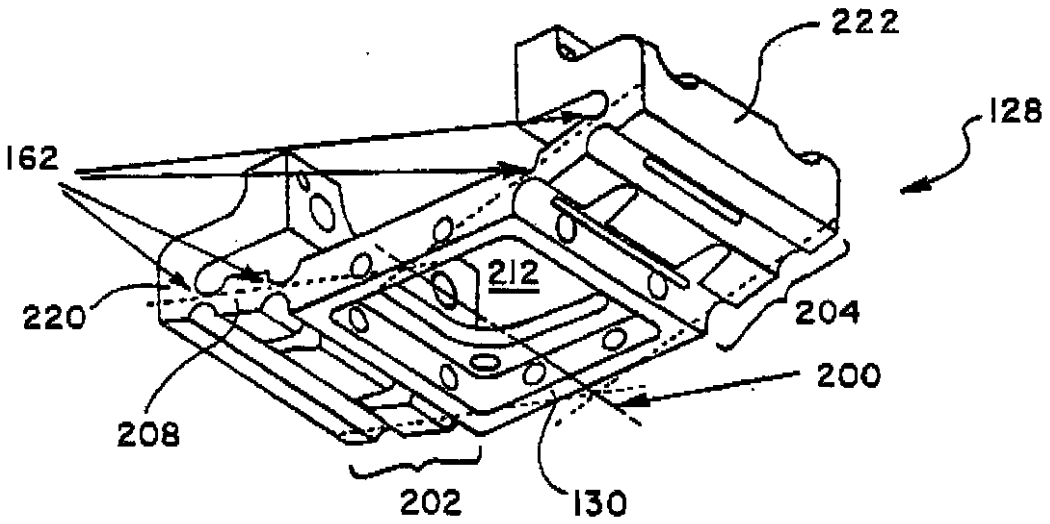
222
128
162
212
220
204
200
208
202
130

FIG. 6B

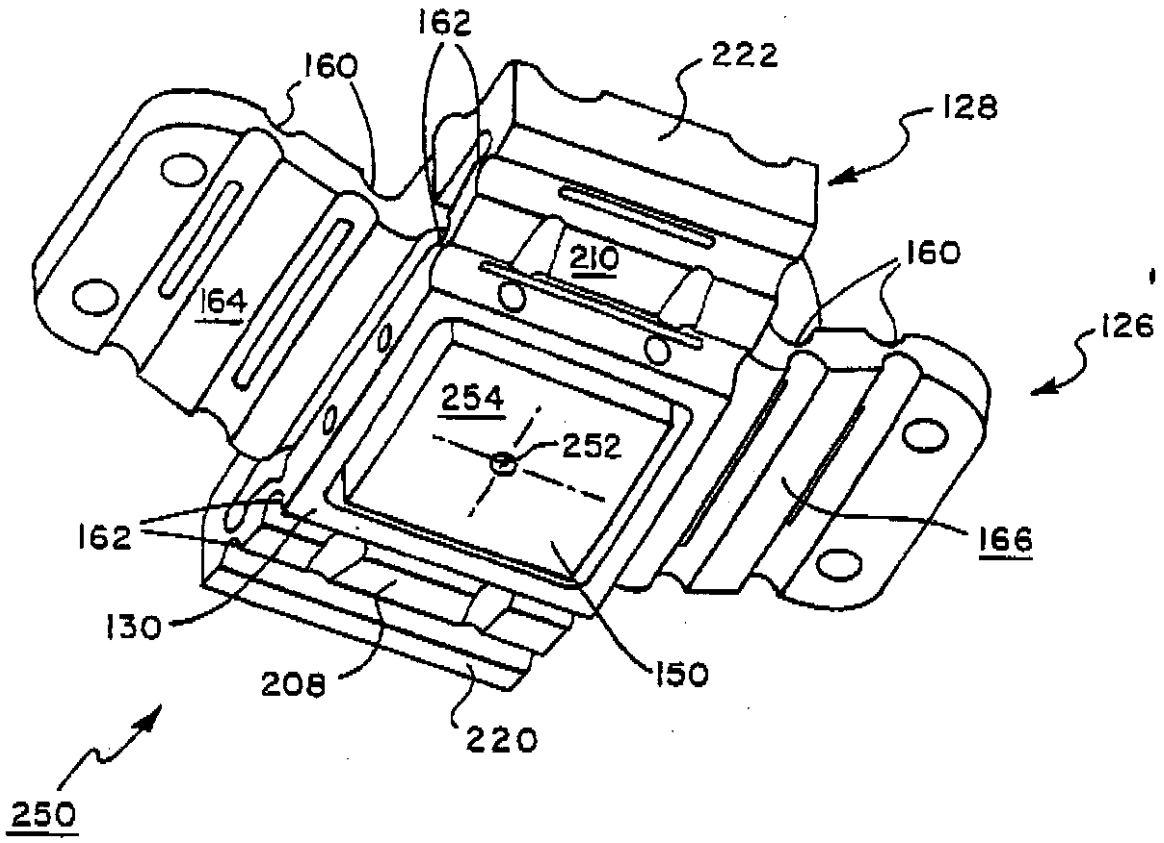
162
160
222
128
210
160
164
126
254
252
162
166
130
150
208
220
250

FIG. 7

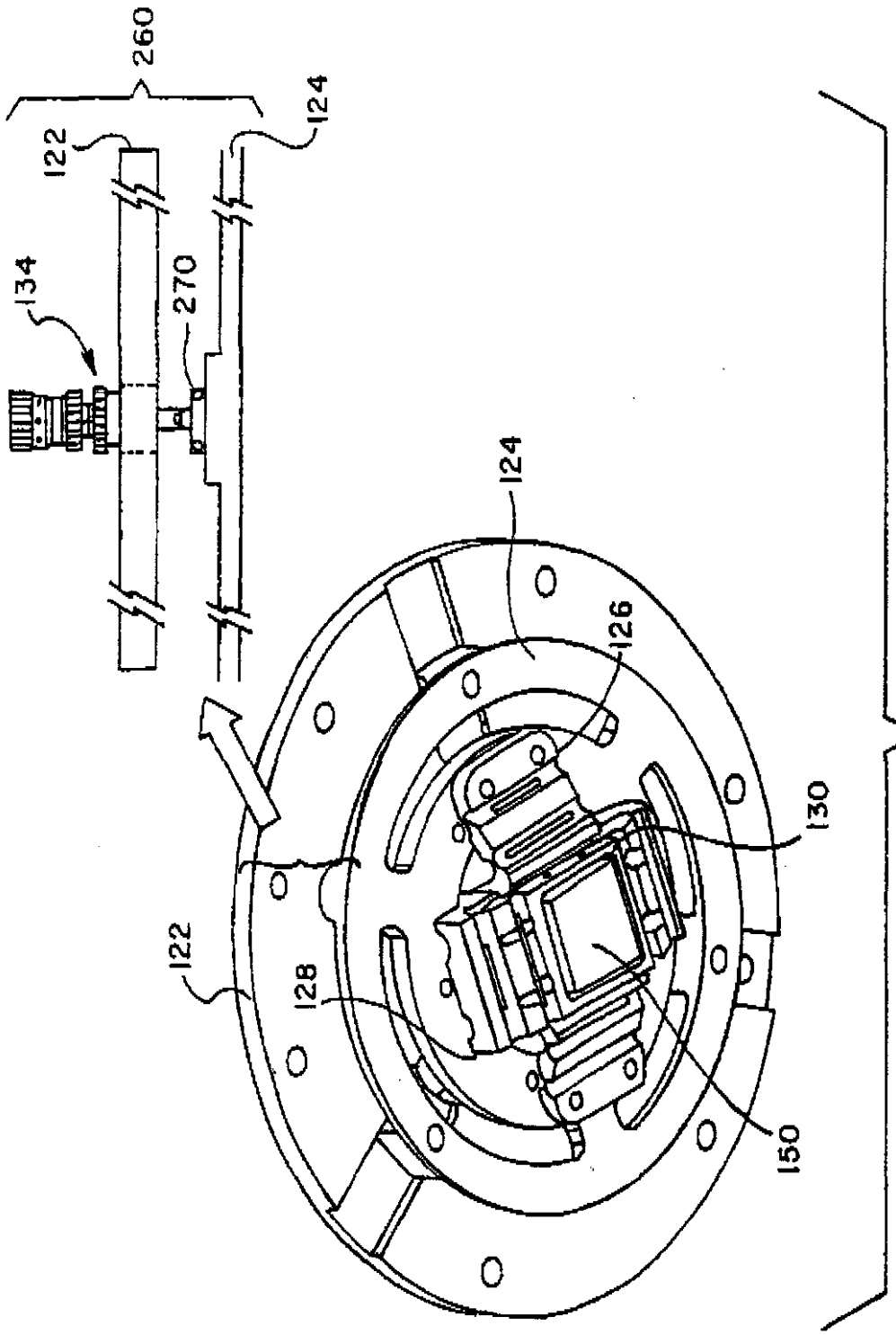

FIG. 8

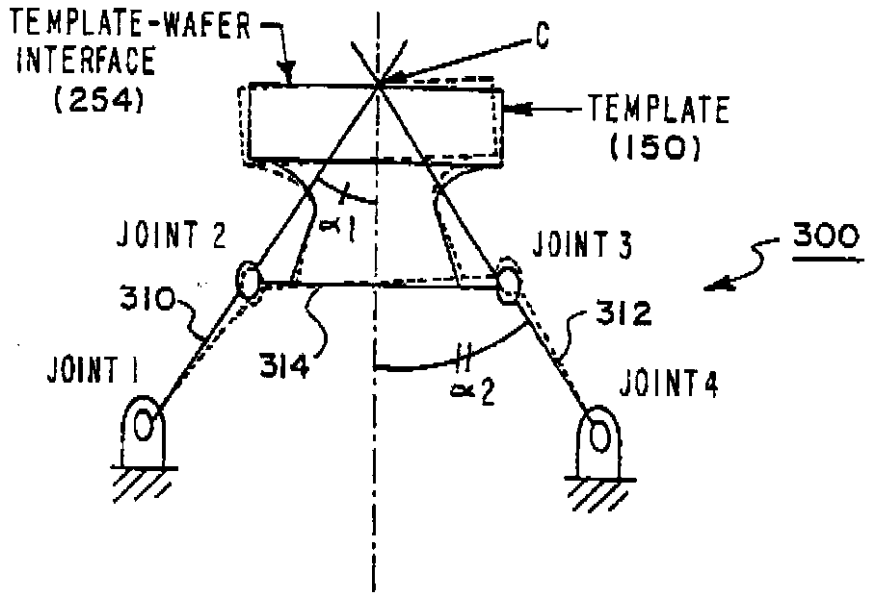
TEMPLATE-WAFER INTERFACE (254)
C
TEMPLATE (150)
JOINT 2
JOINT 3
300
310
312
JOINT 1
314
JOINT 4

FIG. 9

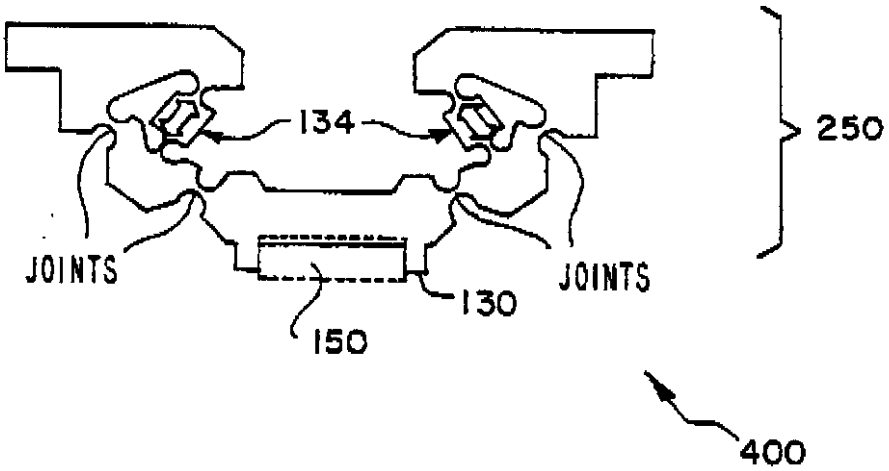
134
250
JOINTS
JOINTS
130
150
400

FIG. 10

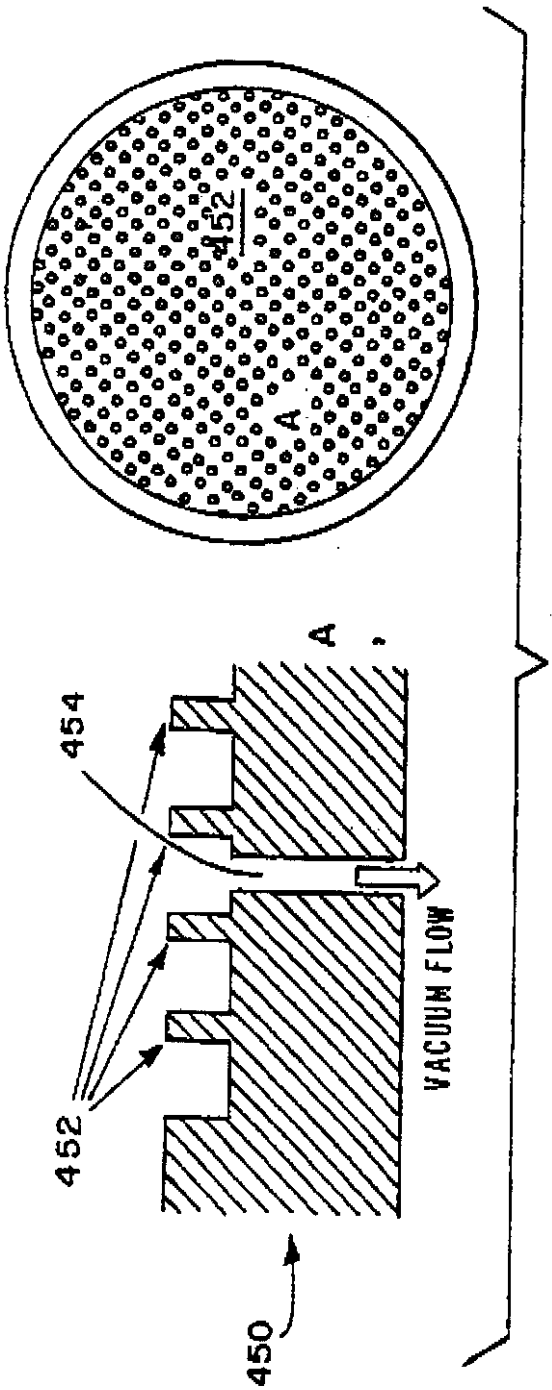

FIG. 11A

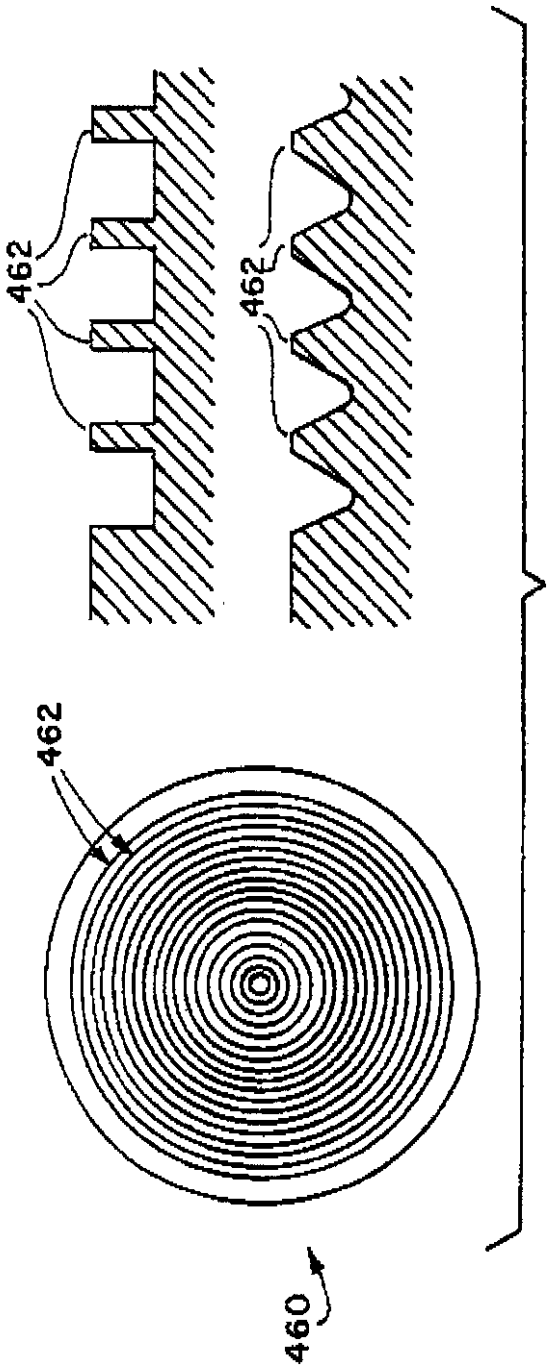

FIG. 11B

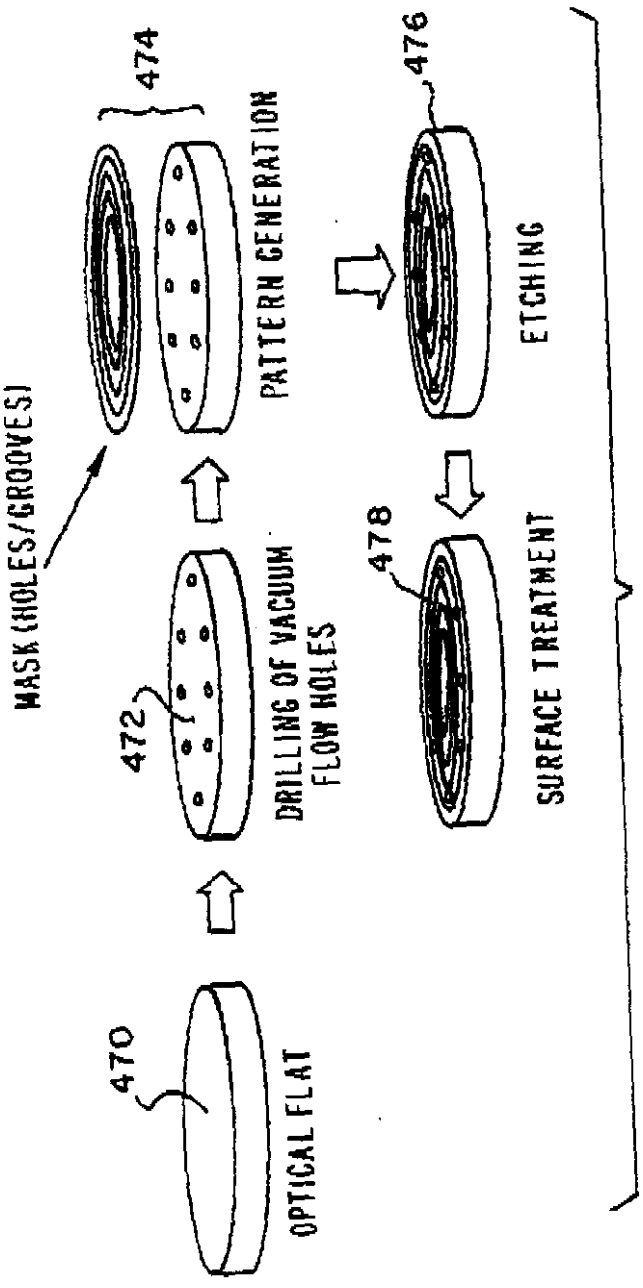
470
OPTICAL FLAT
472
DRILLING OF VACUUM FLOW HOLES
MASK (HOLES/GROOVES)
474
PATTERN GENERATION
476
ETCHING
478
SURFACE TREATMENT

FIG. 12

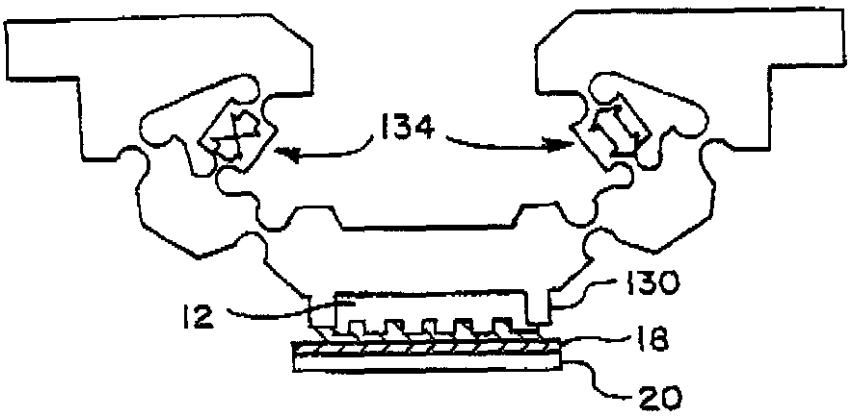

FIG. 13A

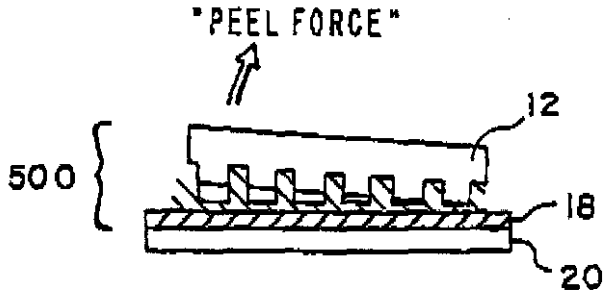

FIG. 13B

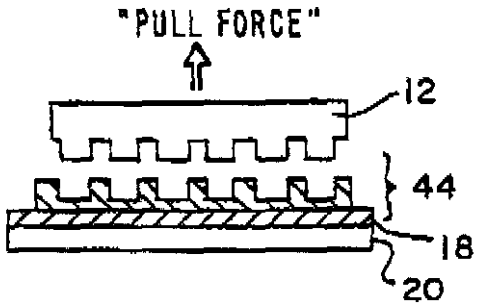

FIG. 13C

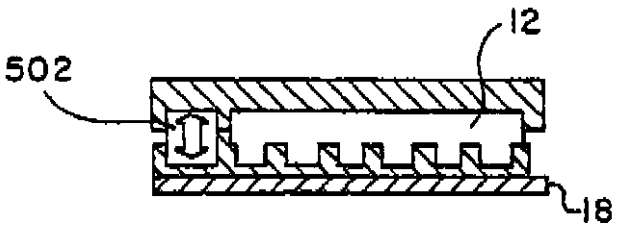

FIG. 14A

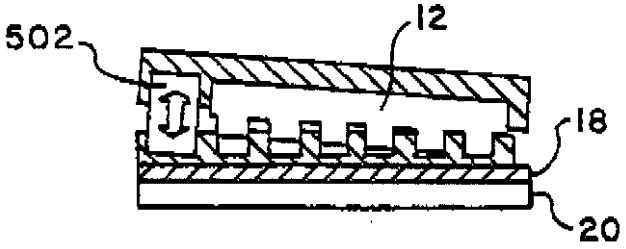

FIG. 14B

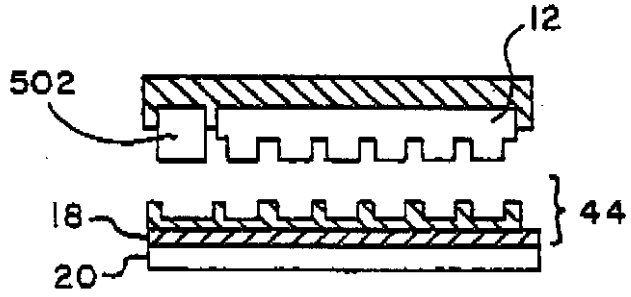

FIG. 14C

WO 01/33300 A2

PCT/US00/30041

名称：石版印刷工艺中的高精度方位调整及缝隙控制阶段

摘要：

石版印刷中模板与底板高精确度定位的方法及相关装置，包括一校准系统，其包括一方向校准阶段和一能够维持模板与底板间缝隙一致的精确定位阶段。该精确定位阶段包括一对挠性构件，该挠性构件具有挠曲接合，以围绕由第一定位轴和第二定位轴交会成的支点运动。传动装置伸长或变短使挠性构件膨胀或收缩。用剥拔的方式分离模板，从而防止破坏底板上已印刻的图案。