H. W. HUNTRESS.

PROTECTOR FOR TELLERS OR OTHER MONEY HANDLERS.

APPLICATION FILED JULY 21, 1920.

1,436,315. Patented Nov. 21, 1922.

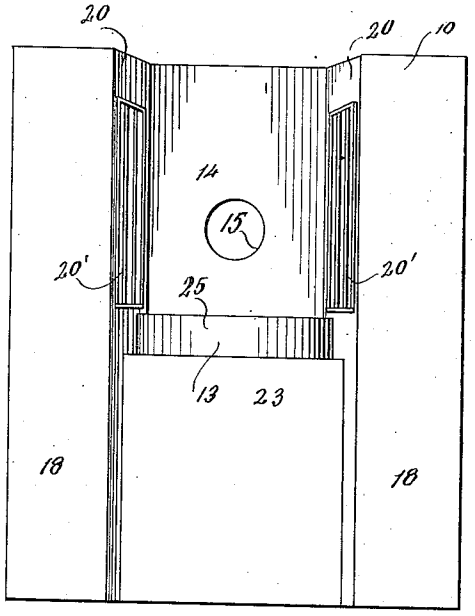


Fig. 1.

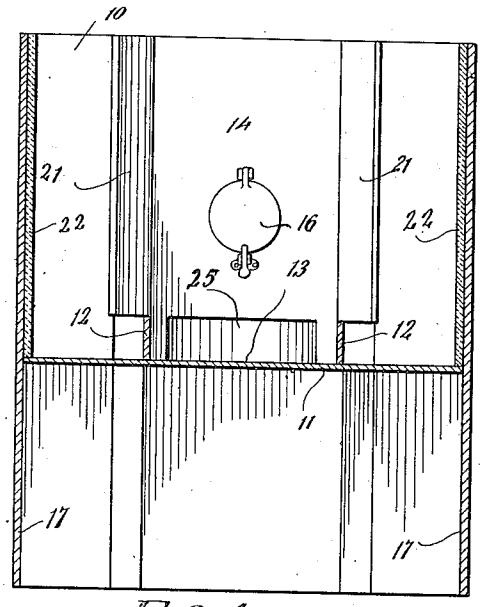


Fig. 4.

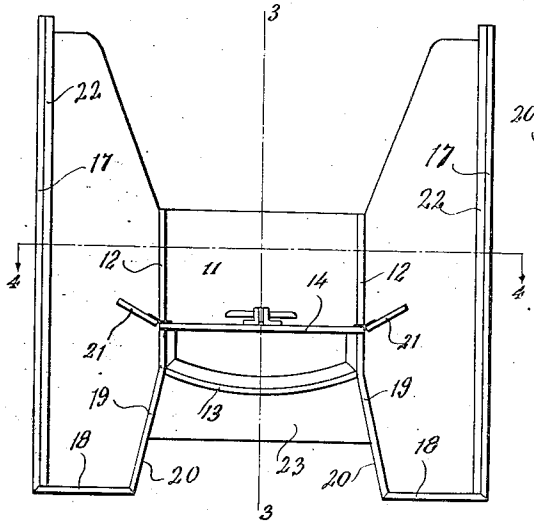


Fig. 2.

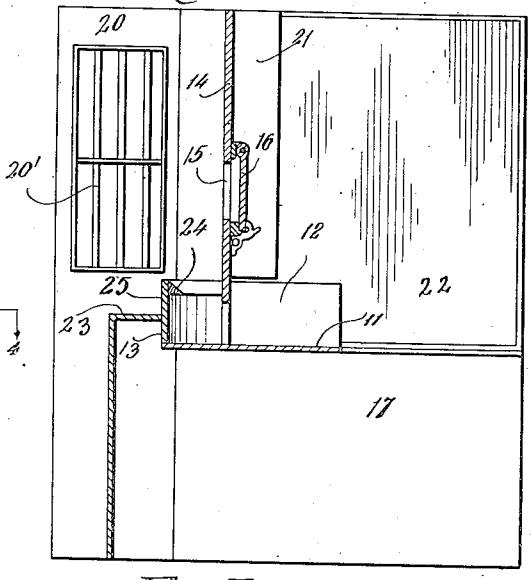


Fig. 3.

Inventor
H. W. Huntress

By

Attorneys

Patented Nov. 21, 1922. 1,436,315

# UNITED STATES PATENT OFFICE.

HARRY W. HUNTRESS, OF TURLOCK, CALIFORNIA.

## PROTECTOR FOR TELLERS OR OTHER MONEY HANDLERS.

Application filed July 21, 1920. Serial No. 397,966.

*To all whom it may concern:*

Be it known that I, HARRY W. HUNTRESS, a citizen of the United States, residing at Turlock, in the county of Stanislaus, State of California, have invented certain new and useful Improvements in Protectors for Tellers or Other Money Handlers; and I do hereby declare the following to be a full, clear, and exact description of the invention, such as will enable others skilled in the art to which it appertains to make and use the same.

This invention relates to new and useful improvements in safety devices and particularly to safety devices for use to protect tellers in banks, stores, or other places where money is handled.

One object is to provide a novel and improved device of this character whereby the teller will be effectively protected from attack by robbers, and completely out of sight of a person approaching or standing at the window, directly.

Another object is to provide a novel and improved device of this character wherein the teller can see the person at the window, and the person at the window see the teller by reflection, and not by direct sight, the teller being effectively protected behind bullet-proof walls.

A further object is to provide a novel and improved device of this character wherein transactions can be easily and properly made between the teller and the customer without danger of the customer being able to reach the teller or intimidate him with a fire-arm.

A still further object is to provide a novel and improved structure of this character whereby the teller and customer can see and talk with each other without either of them coming into direct view of the other.

Other objects and advantages will be apparent from the following description when taken in connection with the accompanying drawings.

In the drawing:

Figure 1 is a front elevation of the protector for tellers.

Figure 2 is a top plan view of the same.

Figure 3 is a vertical longitudinal central sectional view taken on the line 3—3 of Figure 2.

Figure 4 is a vertical transverse sectional view taken on the line 4—4 of Figure 2, rearwardly of the front wall 14, and looking forwardly toward said wall.

Referring particularly to the accompanying drawings, 10 represents the teller's desk the central portion 11, of the top of which is sunken below the side portions 12, thereof, to a distance approximating several inches. The front wall of the sunken portion 11 is longitudinally arcuate, as shown at 13. Disposed vertically, with its side portions secured to the raised side portions 12, of the desk top, is a sheet metal wall 14, said wall having a circular opening 15 in the center of its lower portion. Secured to the rear face of the wall 14, directly behind the opening 15, and spaced rearwardly from the wall, is a metal disk 16, the said disk being of a diameter considerably greater than that of the opening. This space permits the teller and customer to hold conversations. The disk 16 is mounted in such manner as to be readily moved to uncover the opening 15 and permit the passage of packages which are too large to pass beneath the wall.

Extending above the sides of the desk top are the metal walls 17, said walls extending a certain distance forwardly of the wall 14, and being connected to the vertical transverse walls 18. These latter walls 18 are comparatively narrow, and extending inwardly from the inner edges of these walls 18, to and connected with wall 14 are the walls 19, each having an angular opening 20, extending from a point at the plane of the side portions 12 to a point adjacent the top of the wall. A metal grating 20′ is secured within the opening 20 of each of the walls 19, as clearly seen in the drawing.

Hinged to the points of connection between the front wall 14 and the walls 19, are the vertical guard plates or doors 21, said doors being arranged to be at different angles, the free vertical edges of the doors being spaced, at all times from the side walls 17.

Secured to the inner faces of the walls 17 are the large mirrors 22 the forward portions of such mirrors being readily seen by a customer through the gratings 20′.

A counter 23 extends forwardly from the front wall of the sunken portion of the desk top, and transversely between the walls 19, on which the customers are permitted to lean

and to place their papers, checks, and the like. The customer, standing before the said counter 23, sees, through one or the other of the gratings and in one or the other of the mirrors 22, the reflection of the teller who is behind the wall 14. The pass-book, check, or the like, is passed downwardly beneath the lower edge of the wall, 14, and is received by the teller, from behind said wall, the money and book being returned in the same manner to the customer. Thus the teller is completely protected from direct contact with the customer, but can readily see and converse with him. A would-be robber could not hold up the teller, as he could not reach him, the walls effectively protecting the teller. There is no space through which the robber could point a gun at the teller.

As an added protection to the teller, and to prevent the person outside from getting a horizontal view beneath the lower edge of the wall 14, an outwardly bowed wall 25 of several inches in height, is secured to the front curved wall of the sunken portion 11 of the desk top, said wall 25 extending several inches above the level of the counter 23.

The curved wall 25 and that of the sunken portion of the desk top are preferably covered with metal to protect them from wear.

Secured to the upper edges of all of the walls are the downwardly and inwardly inclined guard 24, to prevent any attempt of a robber reaching over the walls to shoot or intimidate the teller.

What is claimed is:

1. A protector for a money handler or teller comprising a desk, enclosing walls on and extending above the desk, the front wall having an indentation resulting in opposing side walls, said side walls having sight openings therein, and movable guards extending from the inner ends of the opposing side walls toward and spaced from the side walls of the enclosure.

2. A protector for a money handler or teller comprising an enclosure having a recess in the front wall thereof resulting in short vertical side walls, sight openings in the short walls, the front wall of the enclosure having a speaking opening, a disk secured to the wall rearwardly of the speaking opening and spaced from the said wall, the enclosure having a counter the central portion of which is sunken and having its forward wall curved outward beyond the lower edge of the front wall for the passage of papers to and from the teller, and obliquely arranged guard plates at the opposite sides of the recess of the front wall within the enclosure and terminating a short distance from the side walls of the enclosure.

In testimony whereof, I affix my signature, in the presence of two witnesses.

HARRY W. HUNTRESS.

Witnesses:
A. S. CHILD,
E. E. STRIPLIN.