May 2, 1950 G. V. A. MALMROS 2,506,463

JOGGLE PLATE

Filed Dec. 21, 1945 2 Sheets-Sheet 1

FIG.1.

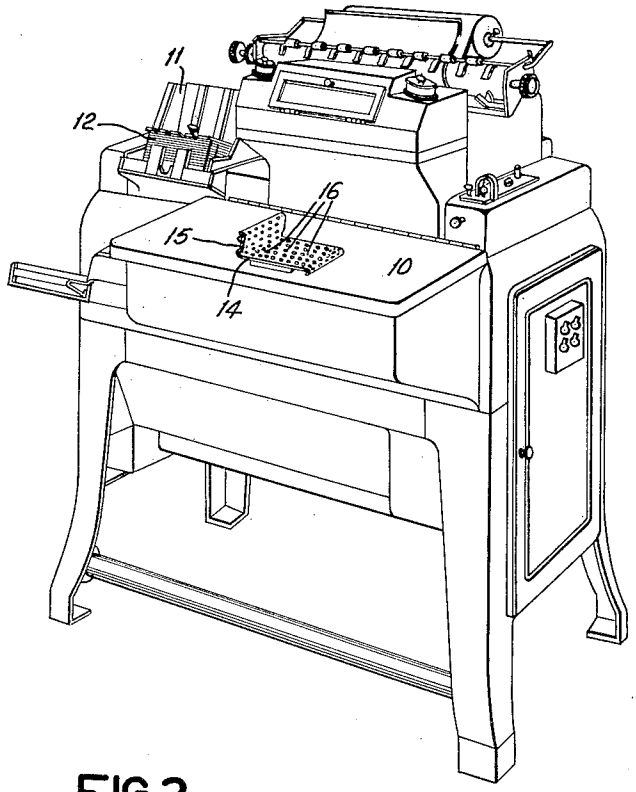

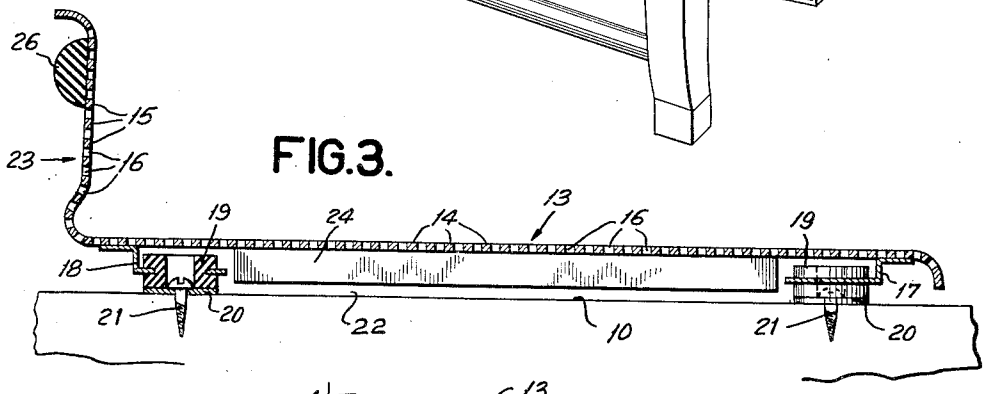

FIG.3.

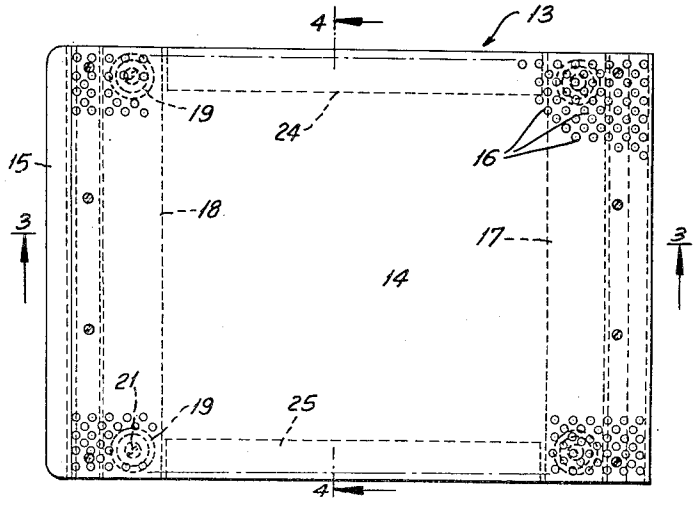

FIG.2.

INVENTOR
G. V. A. Malmros
BY
W. M. Wilson
ATTORNEY

May 2, 1950 G. V. A. MALMROS 2,506,463

JOGGLE PLATE

Filed Dec. 21, 1945

2 Sheets-Sheet 2

FIG. 4.

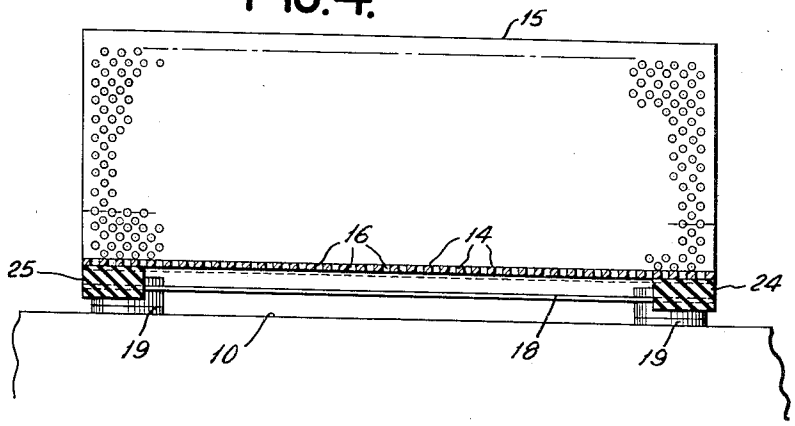

FIG. 5.

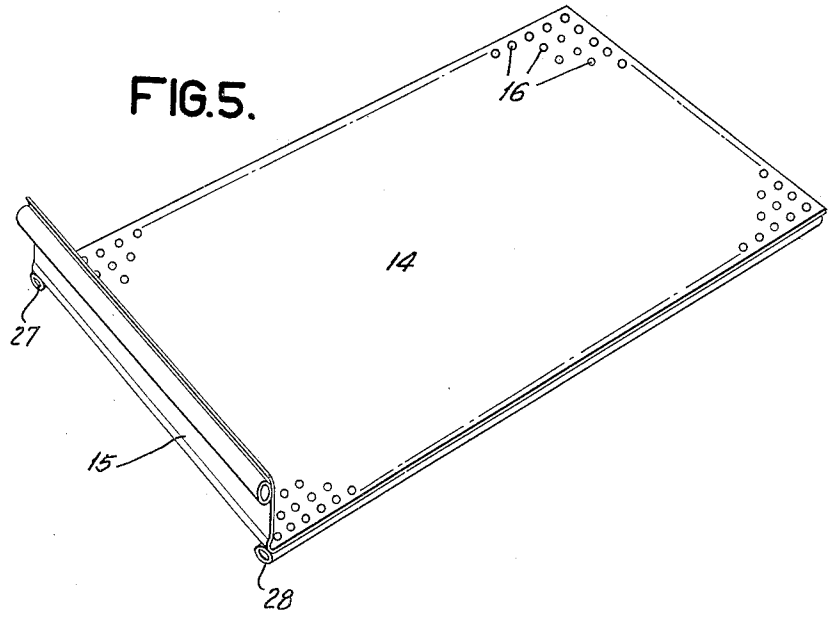

INVENTOR
G. V. A. Malmros
BY
W. M. Nelson
ATTORNEY

Patented May 2, 1950

2,506,463

UNITED STATES PATENT OFFICE

2,506,463

JOGGLE PLATE

Gustav V. A. Malmros, Binghamton, N. Y., assignor to International Business Machines Corporation, New York, N. Y., a corporation of New York

Application December 21, 1945, Serial No. 636,528

1 Claim. (Cl. 129—1)

1

This invention relates to work-tables or the like having sound diminishing construction and properties so that manual operations performed on the table can be carried out in a quieter manner than heretofore.

The invention relates especially to joggle plates on which the edges of a stack of cards are joggled to straighten a stack of elements, such as cards, metal plates, bars and the like.

A particular use of the joggle plate is in connection with card controlled accounting or sorting machines which utilize stacks of cards as the control elements. Prior to the insertion of a stack of cards in the supply magazine the stack is manually joggled to align all edges of the cards, which is a requirement to enable the magazine to receive a stack of cards. Such accounting machines are customarily provided with work-tables having smooth surfaces and against this work-table or any other the operator strikes the edges of a stack of cards to straighten the stack.

In sorting machines the work-table usually consists of a glass cover plate through which the passage of the cards as they are being sorted may be viewed, as disclosed in the patent to Ford, No. 1,741,985.

It is well known that when edges of cards are straightened by striking them against the smooth surface of a work-table the physical impact of the cards against the table produces noise for a number of reasons and the more forceful the impact the louder the resultant noise. Such noise accompanies and is a result of the force necessary to properly joggle or straighten the cards. Occasionally the enthusiasm of the operator in carrying out this preliminary operation creates a noise louder than necessary. In offices where such machines are employed the noise distracts and disturbs others and it is to the end that joggling can be performed in a quiet manner that the present invention has been devised.

It is, therefore, the broad object of this invention to devise a work-table which has impact reducing and sound diminishing properties on which a stack of elements can be quietly joggled.

Another object of the invention is to devise a non-resonant joggle plate.

In more detail it is an object of the invention to construct a joggle plate with a series of perforations which eliminate the trapping of air produced by striking the cards against the joggle plate and the resultant noise.

Another object of the invention is to mount the perforated joggle plate to provide an air space beneath the joggle plate which functions as an

2

air cushion for the air which would be trapped by striking the edges of the cards against the joggle plate.

A still further object of the invention is the provision of means to damp out vibrations set up in the joggle plate when a stack of cards is struck against the joggle plate.

A still further object of the invention is the provision of means to "float" the joggle plate on a supporting base by resilient mountings to prevent the noise resulting from the impact of the cards against the joggle plate from being transmitted to the base.

While the utilization of the present invention has been explained in connection with a specific type of machine and specific elements to be joggled, such as cards, such use is merely exemplary and not restrictive. Not only can cards be quietly joggled by the improved joggle plate but other elements as well, such as metal plates, bars, etc., which would cause even more noise than cards. The joggle plate need not be an attachment to a work-table but may comprise the work-table itself.

Furthermore, the method of mounting, the means shown herein for damping out vibrations arising in the joggle plate, the specific construction of the joggle plate, etc., are capable of obvious modifications without departing from the spirit of the invention.

Other objects of the invention will be pointed out in the following description and claims and illustrated in the accompanying drawings, which disclose, by way of example, the principle of the invention and the best mode, which has been contemplated, of applying that principle.

In the drawings:

Fig. 1 is a perspective view of a conventional card controlled accounting machine showing the customary work-table of the machine equipped with one form of the improved joggle plate.

Fig. 2 is a plan view of the joggle plate.

Fig. 3 is a longitudinal sectional view taken on the line 3—3 of Fig. 2 but enlarged.

Fig. 4 is an enlarged transverse sectional view taken on the line 4—4 of Fig. 2.

Fig. 5 is another embodiment of a joggle plate.

In Fig. 1 there is shown a conventional card controlled accounting machine wherein 10 represents a work-table or base on which, in the absence of the present invention, the cards are joggled, and 11 a card supply magazine. The cards 12 disposed in the magazine are substantially rectangular and in order that a stack may be disposed therein the cards are preliminarily

joggled on the work-table to straighten the stack by aligning all four edges. Without the present invention the striking of the cards against the work-table 10 produces one noise resulting from the physical contact of the card edges with the table which is transmitted by an efficient sound path to the frame or parts of the machine which may amplify the noise. Another noise results from the percussion, impact or "slap" of the trapped air against the work-table surface since the work-table is devoid of any noise absorption or noise deadening properties. The intensity of sound or noise produced is a function of the force exerted in striking the cards against the table and even with a minimum force the noise in terms of decibels is discernible in an average quiet office and disturbing to others.

In the embodiment shown in Figs. 1, 2 and 3 the joggle plate, generally indicated by reference numeral 13, comprises a steel plate to provide a smooth, stiff, flat surface on which the cards can be joggled. The horizontal portion 14 and the integral upstanding vertical portion 15 are used to concomitantly joggle any two right angle edges, the portion 14 being longer to cooperate with the longer edges of the cards than portion 15 which is shorter to cooperate with the shorter edges of said cards. By turning the card stack after one joggle operation the other two edges are aligned.

A plurality of rows of apertures 16 are formed in the joggle plate and are preferably staggered as shown in Fig. 2 so that a large number may be provided in a square inch of area. About forty apertures or perforations in each square inch of surface have been found satisfactory and each .062 inch in diameter, although the size and number can be varied.

Underneath the horizontal portion 14 are secured, by any suitable means, brackets 17 and 18 carrying four resilient rubber grommets 19 having washers 20 cemented thereto. Through the washers 20 screws 21 pass to attach the joggle plate 13 to the work-table 10. The grommets are of such dimension that they space the horizontal portion 14 from the base or work-table surface to provide an air space 22 (Fig. 3) beneath the plate.

As a stack of cards is forcefully struck against the horizontal portion 14 of the joggle plate 13 the air beneath the cards is not trapped, due to the apertures 16 and the air space 22. This effectively eliminates the noise due to the air "slap" and eliminates one source of noise. When the card edges strike the vertical portion 15 of the joggle plate 13 the trapped air passes through the apertures or perforations 16 to the air space 23 (Fig. 3), aside of the vertical plate 15, and eliminates a corresponding source of noise here.

Noises due to the physical contact of the card edges and the metal joggle plate cannot be transmitted to the base of the machine due to the resilient rubber grommets 19 which function as a resilient suspension for the joggle plate and function to "float" the joggle plate.

Preferably, sponge rubber strips 24 and 25 are cemented beneath the horizontal portion 14 and a strip 26 is cemented to the vertical portion 15 and these function to damp out vibrations which

may be set up in the joggle plate 13 when cards forcibly strike the joggle plate.

The above construction effectively functions to secure a quiet action in the joggling operation in the embodiment shown in Figs. 1–4.

In the modification shown in Fig. 5 the rubber strips 27, 28 which are cemented beneath the horizontal portion 14 at the edges can be conveniently used to space the horizontal portion from the work-table or base to provide the air space 22 and also as a plate damper and shock absorber. This embodiment is preferred when a simplified and less costly construction is found desirable. Sound intensity is, however, reduced to the same extent since the modification in Fig. 5 utilizes the same means to secure quiet joggling operations.

In practice forcible striking of card edges against the improved joggle plate produces noise characterized as a dull thud, which is barely discernible, and certainly not distracting and disturbing to others.

While there have been shown and described and pointed out the fundamental novel features of the invention in two embodiments, it will be understood that various omissions and substitutions and changes in the form and details of the device illustrated and in its operation may be made by those skilled in the art without departing from the spirit of the invention. It is the intention, therefore, to be limited only as indicated by the scope of the following claim:

What is claimed is:

A joggle table on a machine having a fixed base plate on which a stack of cards are manually joggled comprising a stationary plate attached to said fixed base plate having a horizontal work plate against which one edge of a stack of cards is manually forcibly struck to shift the projecting disaligned cards into edge alignment with the other aligned cards, said horizontal plate having an integral vertical work plate against which said stack of disaligned cards may also be manually struck forcibly to align other edges, means for mounting said horizontal work plate on said fixed base plate to be spaced apart from said base plate to provide an air cushion space, said horizontal and vertical plates having multiple perforations, each of approximately .06 inch in diameter and spaced to provide approximately forty perforations in each square inch of surface, said multiple perforations enabling air suddenly trapped and compressed between the edges of the stack of cards and both plates to escape, whereby the additional noise resulting from the percussion and slap of trapped air is eliminated.

GUSTAV V. A. MALMROS.

REFERENCES CITED

The following references are of record in the file of this patent:

UNITED STATES PATENTS

Number	Name	Date
1,477,331	Ely	Dec. 11, 1923
1,823,744	King	Sept. 15, 1931
2,150,028	Dodson	Mar. 7, 1939
2,211,094	Braun	Aug. 13, 1940
2,256,547	Burdick	Sept. 23, 1941