W. CAMERON.

BLANK POSITIONING MECHANISM.

APPLICATION FILED OCT. 5, 1918.

1,346,589. Patented July 13, 1920.

Fig. 1

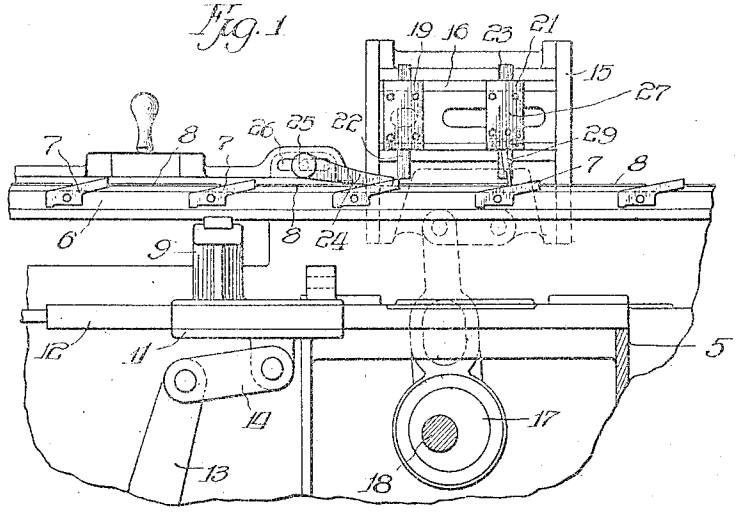

Fig. 2.

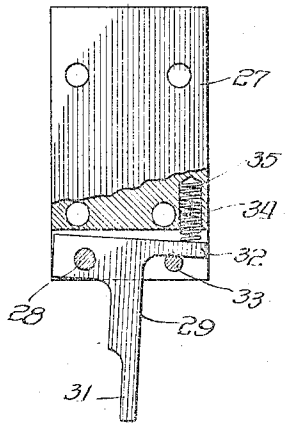

Fig. 3.

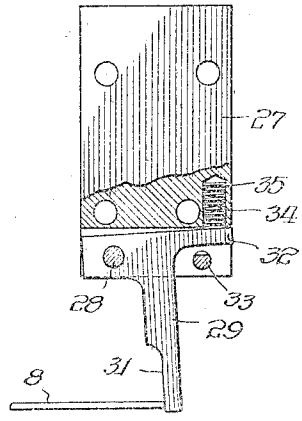

Witness

Fred. Davison

Inventor:

William Cameron

By Pond & Wilson Attys.

UNITED STATES PATENT OFFICE.

WILLIAM CAMERON, OF CHICAGO, ILLINOIS, ASSIGNOR TO TORRIS WOLD & COMPANY, OF CHICAGO, ILLINOIS, A CORPORATION OF ILLINOIS.

BLANK-POSITIONING MECHANISM.

1,346,589. Specification of Letters Patent. Patented July 13, 1920.

Application filed October 5, 1918. Serial No. 256,934.

To all whom it may concern:

Be it known that I, WILLIAM CAMERON, a citizen of the United States, residing at Chicago, in the county of Cook and State of Illinois, have invented certain new and useful Improvements in Blank-Positioning Mechanism, of which the following is a specification.

This invention has reference to blank positioning mechanism adapted to accurately position a blank of sheet metal or the like for the accurate operation of punching or other mechanism upon the blank.

In automatic machines of various characters for operating upon sheet metal or the like, and particularly in tin can making machinery adapted to produce sanitary cans, it is essential that the blanks from which the can bodies are formed be accurately positioned at various stages through the machine so that the desired operations may be performed upon them with accuracy. Accuracy is of material importance, particularly at the notching station where the notches are cut in the blanks which enable the production of a lock-and-lap seam body.

My present invention is designed to provide a blank positioning mechanism which will accurately position the blanks for operation thereon by the required tools, and for purpose of illustration I have shown it in connection with the notching station of a lock-and-lap seam body maker, only a sufficient portion of the machine, however, being shown to illustrate the relation of my invention thereto.

I am aware that it has heretofore been proposed to position blanks at the notching station by feeding them beyond a predetermined position and then moving them back against a fixed stop by a so-called set-back mechanism, consisting of an inclined or cam shaped finger adapted to be reciprocated across the path of travel of a blank so that the inclined face of the finger would engage the forward edge of a blank and upon continued movement of the finger would push the blank rearwardly.

The constantly increasing tendency toward high speed in machines of this character, however, frequently causes the blank advancing mechanism to overthrow the blank, that is, to feed it forwardly a greater distance than was intended, with the result that when the positioning finger comes down it strikes the top of the blank instead of the forward edge thereof and either smashes or ruins the blank or breaks the machine.

One of the primary objects of my present invention is to provide a blank positioning mechanism which will be capable of successful and accurate operation upon very high speed machines without danger of injury to the blank or breakage of the machine.

Another object is the provision of a positioning mechanism which will position the blanks with absolute accuracy, even though there may be slight irregularities in the sizes of blanks, and which will move the blanks into a fixed predetermined position at each operation and will absolutely prevent overthrow of the blanks by the advancing mechanism.

For the purpose of facilitating an understanding of my invention I have illustrated one preferred embodiment thereof on the accompanying drawing, from an inspection of which when considered in connection with the following description, its structure, operation and many of its attendant advantages should be readily appreciated.

Referring to the drawing—

Figure 1 is a fragmentary side view, partially in section, of a sheet metal working machine embodying my improvement;

Fig. 2 is an enlarged detail view, partially in section, showing the positioning finger in its normal position; and

Fig. 3 is a similar view showing the finger pushed forwardly by an advancing sheet.

On the drawing, reference character 5 indicates generally the frame of a sheet metal working machine, the type illustrated being a body maker for sanitary cans. The machine is provided with a guideway in which a reciprocatory feed bar 6 equipped with a series of feed dogs 7 is adapted to reciprocate longitudinally to feed the metal blanks 8 from left to right, viewing Fig. 1, by step by step motion. Two feed bars are employed, one at each side of the machine (one only, however, being shown in the drawing), and these feed bars are connected to a cross head 9 carried on a sliding member 11, which is reciprocated upon the guide 12 by a lever 13, which is connected with the member 11 by a link 14 and is adapted to be operated by a suitable cam (not shown).

At the notching station, that is, that point longitudinally of the machine at which the

blanks are provided with notches which permit the formation of a lock-and-lap seam body, there is provided at each side of the machine a vertical guideway 15 in which a cross head 16 is vertically reciprocated by suitable mechanism connected with an eccentric 17 on a cross shaft 18.

The cross head 16 is equipped with a pair of punch holders 19 and 21 carrying respectively the notching punches 22 and 23.

In order that the blanks may be notched in the proper places, it is essential that the blanks be accurately positioned with respect to the punches, and with this end in view I have provided positioning mechanism, comprising a back stop 24 at each side of the machine, these back stops being pivotally mounted at 25 upon a side member of the machine frame, which member is equipped with an elongated slot 26 so as to permit of horizontal adjustment of the back stops to accommodate the machine to blanks of various sizes.

The blanks are advanced in a step by step movement by the feed dogs 7 and as they approach the notching station they move under the back stops 24, which after a blank has been advanced beyond their free ends, drop by gravity back of the blank to prevent its return movement beyond a predetermined position.

The back stops having been properly adjusted with respect to the notching punches, their forward or holding ends are so disposed that when a blank is firmly engaged with these ends the blank will be properly positioned with respect to the punches for the notching operation. The movement of the feed bar 6 carrying the advancing feed dogs 7, is so regulated that it advances a blank at each actuation of the feed bar a short distance beyond the free ends of the back stops, or in other words, beyond the predetermined position which the blank is to assume during the notching operation.

For the purpose of urging the feed blank snugly back against the back stops into the required position, I have provided a positioning device in the form of a yieldingly mounted finger adapted to engage the forward edge of a blank and return it into engagement with the back stops. One of these positioning devices or fingers is mounted at each side of the machine as will be understood, and each consists of a casing 27 adapted to be bolted or otherwise securely mounted upon the punch holder 21. In the lower portion of the casing is pivotally mounted upon a pintle 28, the positioning finger 29, which comprises a downwardly projecting positioning portion 31 and a horizontally projecting portion 32 normally resting upon a pin 33 projecting transversely through the casing. A coiled expansion spring 34 disposed in a socket 35 in the casing above the horizontal portion 32 of the finger, normally urges the finger into the position shown in Fig. 2.

The movements of the feed bar 6 and the reciprocatory punch-carrying head are so timed that downward movement of the head carrying the punches and the positioning finger will have progressed to such a point that the lower portion of the finger will be disposed in the path of an advancing blank so that this finger is engaged by the forward edge of the blank during the final advancing movement of the blank. The position of the finger when so engaged by the blank is shown in Figs. 1 and 3, from which it will be observed that the positioning finger has been swung in a counterclockwise direction upon its pivot against the force of the spring 34, the extreme forward movement of the blank being shown in these figures. Upon return movement of the feed bar and its feeding dogs 7, the blank is moved rearwardly by the force of the spring 34 acting through the positioning finger so that the blank is pushed back against the forward ends of the back stops 24, where it is held in position to be operated upon by the punches. During the punching operation, displacement or movement of the blank is precluded by reason of the fact that the blank is snugly gripped or clamped between the back stops and the positioning fingers.

After the punching operation has been completed upward movement of the punches by the cross head 16 carries the positioning finger 29 upwardly out of the path of the blank so that the blank may be advanced or fed forwardly by the feed dogs 7 upon the next advancing movement of the feed bar. These operations are repeated at each actuation of the machine, the positioning finger being disposed in the path of an advancing blank and being adapted upon return movement of the feeding mechanism to move the blank rearwardly and securely hold it against the back stop in position to be operated upon by the punches. As soon as the operation has been completed the positioning device is withdrawn, permitting the next advance of the blank, which carries it to or toward another set of operating mechanisms.

It will be understood from the foregoing that I have provided a blank positioning mechanism, shown in connection with a lock-and-lap seam body maker but capable of use in connection with any other machine for operating upon metal or similar blanks, in which the positioning finger is always disposed in the path of an advancing blank so that overthrow of the blank by the feed mechanism when operating at high speeds is prevented, and the blank is always restored and properly positioned and held in position during the operation of the machine thereon. Various changes in the details of

construction shown and described may, of course, be resorted to without departure from the essence of the invention as defined in the appended claims:

I claim:

1. In a blank positioning mechanism, the combination of a back stop means for advancing a blank beyond said back stop, means in the path of said advancing blank for returning the blank to said back stop upon the completion of its advancing movement, and mechanism for withdrawing said means from said blank path to permit further advance of the blank.

2. In a blank positioning mechanism, the combination of a back stop means for advancing a blank beyond a predetermined position, yielding means adapted to be disposed in the path of said advancing blank for returning the blank against said back stop, and mechanism for moving said means out of the path of said blank to permit further advance of the blank.

3. In a blank positioning mechanism, the combination of means for advancing a blank beyond a predetermined position, a yielding finger adapted to be disposed in the path of an advancing blank and whereby said blank is moved rearwardly into said predetermined position, and means for alternately positioning said finger in the path of said blank and withdrawing said finger from said path to permit further advance of the blank.

4. In a blank positioning mechanism, the combination of means for advancing a blank beyond a predetermined position, a yieldingly mounted, longitudinally reciprocable finger, and means for positioning said finger in the path of an advancing blank and for withdrawing said finger from said path after the blank has been positioned by said finger.

5. In a blank positioning mechanism, the combination of a pivotally mounted spring-pressed finger, means for alternately positioning said finger in front of an advancing blank and withdrawing said finger therefrom, means for advancing a blank against said finger, and a stop against which said blank is moved rearwardly by said finger upon return movement of said advancing means.

6. In a blank positioning mechanism, the combination of means for advancing a blank beyond a predetermined position, a device movable transversely across the path of travel of the blank, and means for moving said device into the path of the advancing blank to prevent overthrow of the blank, said device being adapted to impart retrograde movement to said blank upon return movement of said advancing means to thereby position the blank, said moving means serving to subsequently withdraw said device from the path of the blank to permit further advance of the blank.

7. In a blank positioning mechanism, the combination of means for advancing a blank, a spring-pressed finger mounted to reciprocate transversely across the path of travel of said blank, means for reciprocating said finger so that it is in position to be engaged by a blank upon its advancing movement and is adapted to impart reverse movement to said blank upon return movement of said advancing means, and a stop for limiting the return movement of said blank, said reciprocating means being arranged to withdraw said finger from the path of said blank to permit further advance of the blank.

8. In a blank positioning mechanism, the combination of a back stop a pivotally mounted finger, means for moving said finger into and out of the path of an advancing sheet, and a spring for urging said finger rearwardly, said spring acting through said finger to yieldingly limit the forward movement of said blank and subsequently move said blank rearwardly to a predetermined position against said back stop.

WILLIAM CAMERON.