P. GIFFARD.

MACHINERY FOR THE ARTIFICIAL PRODUCTION OF COLD FOR ICE-MAKING, &c.

No. 193,648. Patented July 31, 1877.

Fig. 2.

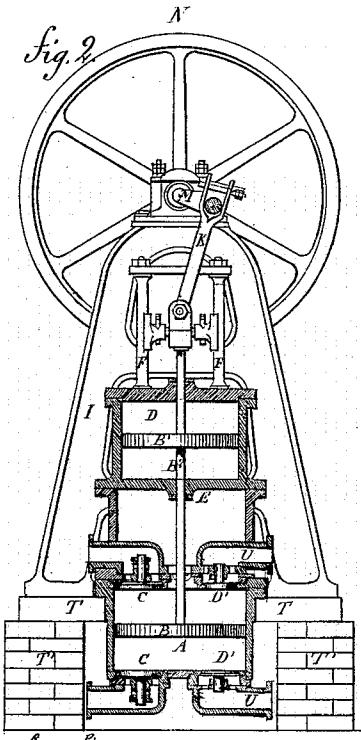

Fig. 1.

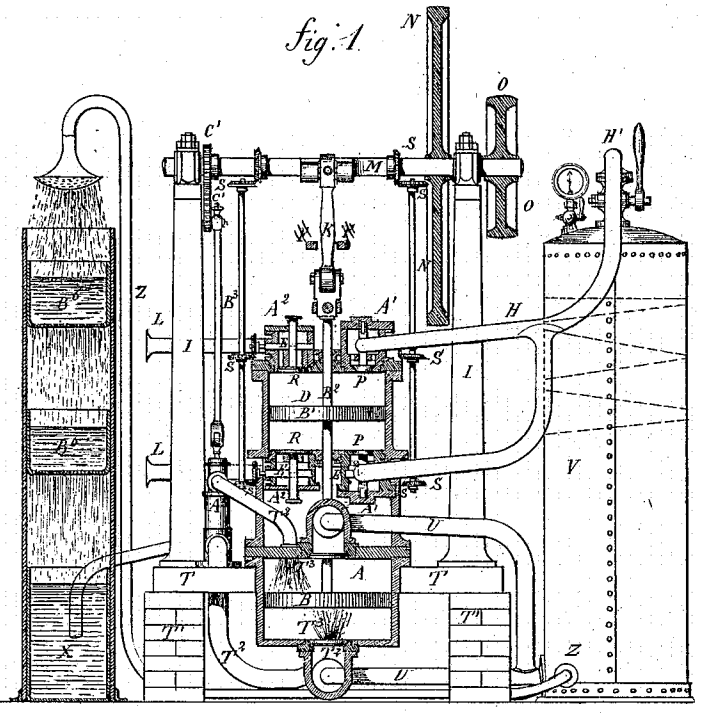

Fig. 2a.

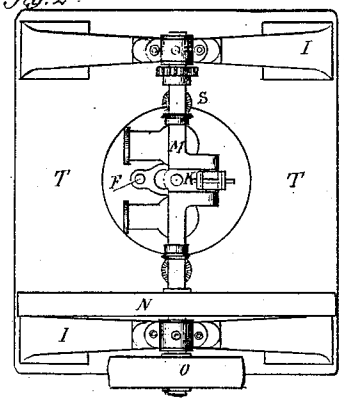

Fig. 3.

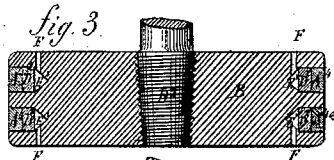

Fig. 6.

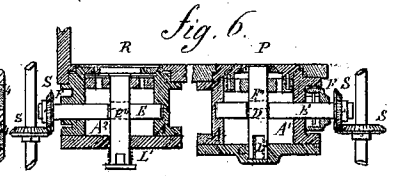

Fig. 4.

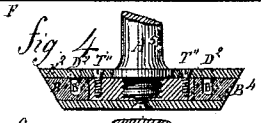

Fig. 5.

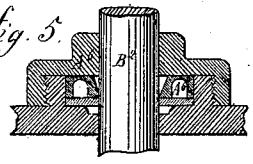

Fig. 7.

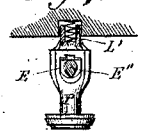

Fig. 8.

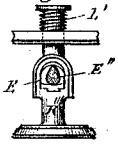

Fig. 9.

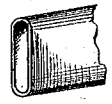

Witnesses.

J. H. Chumway

Clara Broughton.

Paul Giffard Inventor

By Atty.

Thos. G. Ewle

N. PETERS, PHOTO-LITHOGRAPHER, WASHINGTON, D. C.

UNITED STATES PATENT OFFICE.

PAUL GIFFARD, OF PARIS, FRANCE.

IMPROVEMENT IN MACHINERY FOR THE ARTIFICIAL PRODUCTION OF COLD FOR ICE-MAKING, &c.

Specification forming part of Letters Patent No. **193,648**, dated July 31, 1877; application filed July 1, 1876.

To all whom it may concern:

Be it known that I, PAUL GIFFARD, of Rue de la Pépinière, No. 12, in the city of Paris and Republic of France, have invented new and useful Improved Machinery for the Artificial Production of Cold for Ice-Making and other Purposes; and I do hereby declare that the following is a full and exact description thereof, when taken in connection with the accompanying drawings, forming part of this specification, reference being had to the figures and letters marked thereon—that is to say:

The object of this invention is the mechanical production of cold by the expansion of air or gases; and consists in the combinations of machinery or apparatus for compressing the given volumes of air, as more fully hereinafter described.

In the accompanying drawings, Figures 1 and 2 are longitudinal transverse sections, and Fig. 2 is a sectional plan, of the machine; Fig. 3, a section across the diameters of the special pistons that are employed for the compression and expansion of the air; Fig. 4, a sectional view of the kind of valves combined essentially for this machine. Fig. 5 represents, in section, the kind of stuffing-boxes that are employed for the reciprocating and rotating rods and shafts; and Figs. 6, 7, 8, and 9 are views of details, which will be hereinafter described.

Motion is given to the machine by the pulley O, keyed to the horizontal crank-shaft M, working in bearings or pedestals on the two vertical side frames I I, and mounted with a fly-wheel, N, and the crank of the shaft is jointed to a connecting-rod, K, which acts directly on the rod B^2, to which are fixed both the compressing-piston B and the expansion-piston B^1, the pistons being arranged as will be described farther on when referring to Fig. 3. The compressing-piston B works in the lower compression-cylinder A, and the piston B^1 in the expansion-cylinder D, and these two cylinders are double-acting or of double effect. The compression-cylinder A is provided at the top and bottom with suction-valves C C, for drawing in the external air, and two retaining-valves, D^1 D^1, for preventing the compressed air from returning to the cylinder or body of the pump A after it has passed through the pipes U to the reservoir V. The expansion-cylinder D is provided at its top and bottom ends with an ingress or admission box, A^1, Fig. 6, for the admission of the compressed air coming from the reservoir V through the pipes H and cock H′, and also with the egress or exit box A^2, from which the expanded cold air passes through the pipes L L to any place where it is intended to be utilized, and the entire machine is mounted on a foundation bed or plate, T, resting on two walls of masonry, T^1 T^1.

The two ingress or admission boxes A^1 A^1, and also the egress or exit boxes A^2 A^2, are provided with special mechanical and automatic valves, of which the details will be given when referring to Figs. 6, 7, and 8. These valves are worked positively by the shafts E E, which have positive action by pinions S S S, the first of which is on the main or principal shaft M of the machine. At one side of the machine there is an injection-pump, A^3, the piston of which is worked by the connecting-rod B^3, jointed to a crank-pin fixed to the toothed wheel C′, geared into another toothed wheel, C′, on the main shaft M. The water drawn by the pump from the tank X passes by the pipes T^2 T^2 to each end of the piston B in the compression-cylinder A. The air drawn from without by the suction-valves C C is afterward compressed by the piston B, and accumulated in the reservoir V through the valves D^1, and at each stroke of the piston the compressed air is deprived of the heat contained in it by the injection of water from the pump A^3, and then the cold compressed air passes, by means of the expansion-valves P, into the expansion-cylinder D.

In expanding in the cylinder D, and in exercising its mechanical action, the air becomes extremely cold, and when it escapes by the valves R and pipes L L to its destined place to be utilized, it may be stated that it is at a temperature of about 20°, 30°, 40°, or 50° below zero centigrade, according to the temperature of the circumambient air and the injection-water, and also in proportion to the less or more expansion of the air.

The characteristic details of this machine

are as follows: The pistons B and B^1, Fig. 1, (one shown enlarged in Fig. 3,) have each in its exterior two split metallic rings or segments, A^4 A^4, sunk in circumferential grooves in the body of the piston, and two strips or bands, D^2, of supple caoutchouc, are tightly inserted behind the rings A^4 A^4. Behind the grooves and the rings there are vacant spaces or channels E^1, communicating by means of small holes or passages F F, leading from the grooves E^1 E^1 to the upper and lower faces of the piston B, to admit the air and water to the channels E^1 E^1, so that the pressure behind the rings of caoutchouc shall act forcibly on the metallic rings or segments, and thereby give a double tightness to the packing or rings and the body of the cylinder or pump. With this piston the metallic rings or segments give the greatest resistance to the wear, and also the least amount of friction, and the bands of caoutchouc cause absolute sealing, inasmuch as the air presses against the rings of caoutchouc, and consequently against the metallic rings. This piston will wear for a great length of time, prevent the escape of the compressed air, and is not affected or changed either by intense cold or heat, it being used in this machine for compressing and dilating or expanding the air, and also for the pump used for injecting the water.

The valves employed in this machine, one of which is shown in Fig. 4, are each formed of a metallic plate having a cylindrical head with a rod or stem, A^5, on which head is tightly fitted a hardened conical packing-ring, B^4, of caoutchouc, which is held in its place by a metallic plate or cover, E^2, secured by screws T″.

A groove, B^5, is made in the surface packing-ring B^4, near its circumference, and communicating, by means of holes D^2, with the top exterior of the valve, so that the compressed air can pass into the groove B^5 of the caoutchouc, and so expand it as to make an absolutely tight joint or fitting, the valve being turned to the exact form of the metallic seat into which it is to be received; and it is evident that this valve is not subject to wear, and is noiseless in action, by reason of the caoutchouc forming an elastic cushion when the valve is closed upon its seat.

The stuffing-boxes of the machine, one of which is represented in Fig. 5, are each formed of a cupped ring, A^6, of semi-hard caoutchouc, having a conical aperture for the rod, the advantage of which is, that the rod B slides with the least amount of friction, and at the same time a perfectly tight joint or packing is insured.

The distribution of compressed air in the expansion-cylinder is also a characteristic element of the machine, the arrangement consisting, as before described, of two ingress or admission boxes, A^1, and two exit or egress boxes, A^2, both valves being worked by the steel shafts E, Figs. 6, 7, and 8, and the bevel-gearing S S, driven from the main shaft M.

The pipe H, Fig. 1, conducts the compressed air into the admission-box, and the valve P, acted upon by the pressure of air and the spiral spring L′, Figs. 7 and 8, hermetically closes the communication with the cylinder.

On the steel shafts E there are cams or projections E″, which raise the valve at each revolution a distance corresponding to the radius of the said cam or projection. As soon as the cam leaves the valve the latter is closed by the spiral spring and the air-pressure firmly on its seat, while the compressed air introduced into the cylinder continues to act by its own expansion.

The amount of compressed air introduced corresponds with length or radius of the cam, and therefore, by changing the cam, it is possible to cut off the admission at a third, fourth, or fifth part of the stroke of the piston.

The egress or exit box A^2 and eduction or egress valve, also shown in Fig. 6, are precisely similar to the preceding, with the exception that the position of the spring L′ and the action of the valve are reversed, and the actions of the two valves P and R are so regulated that when the admission-valve P opens the escape or eduction valve R closes.

Instead of placing the shafts E in the interiors of the boxes A^1 A^2, it is evident that they can be placed without by lengthening the rods of the valves.

In order to cool the air heated by the compression, I prefer to employ the following arrangement: While the air is being compressed in the cylinder a determined volume of water is forced, by the double-acting force-pump A^3, through the pipes T^2 T^2, leading to the ends of the cylinders, and terminating in roses T^3 T^3. This water is sent into the cylinder with considerable force and under greater pressure than the maximum pressure of the compressed air in the reservoir V, and is broken, as shown in the drawing, against the piston B, as the latter moves in the opposite direction, whereby the water is thrown down in the form of spray, and instantly absorbs the whole of the heat developed by the compression of the air, and this injection of the water under great pressure and finely divided is effected alternately on opposite sides, the system of compression being double-acting.

The pipes U U, fixed behind the retaining-valves D^1 D^1 of the compression-cylinder, convey the mixture of air and water into the reservoir V, in which the water occupies the lower part, while the upper part receives the compressed air in a thoroughly-cooled condition, in readiness to be conducted under pressure to the expansion-cylinder.

In order that the separation of air and water shall be complete, I place in the upper part of the reservoir, and extending to any suitable distance from the top, inclined diaphragms of perforated iron plates and metallic cloth, alternately one above another, and the particles of water forced in with the air are arrested at these diaphragms, and then fall to the bottom of the reservoir.

The air and water reservoir V is placed, by preference, in a special chamber, in direct contact with the waste cold air of the machine. Supposing it is intended to make artificial ice, the cold air can be introduced at a minimum temperature of 32° Fahrenheit, and in these conditions the following arrangement may be advantageously adopted: The copper tube Z, leading from the bottom of the reservoir V, terminates in a rose or spreader, and when the machine is working, on opening a cock in the pipe Z, the water is caused, by the pressure in the reservoir, to fall in the form of rain into a copper tank, B^6, having a sieve acting as a percolator, through which the water flows in hundreds of small streams to a second reservoir, B^6, and then through another sieve into the tank X, from which the feed-pump is supplied, the amount being regulated by a cock.

The contact of the water in this divided state with a very cold atmosphere, and the prolonged descent to which it is subjected, insures a perfect cooling of the water and the utilization of the waste cold air.

I claim—

1. The combination of the compression-cylinder A, expansion-cylinder D, and their respective pistons with intermediate reservoir V and the inlet and exit valves, all substantially as described.

2. The combination of the compression-cylinder A, expansion-cylinder D, and their respective pistons with the intermediate reservoir V, exit and inlet valves, and injection-pump A^3, all substantially as described.

3. In a piston, the combination of duplicate rings A^4 in the periphery of the piston, caoutchouc packing D^2 in rear of said rings, channel E^1 in rear of said packing, and passages F to said channels from the respective sides of the piston, substantially as described.

In testimony whereof I have signed my name to this specification before two subscribing witnesses.

PAUL GIFFARD.

Witnesses:

DAVID T. S. FULLER,

ALBERT CAHEN.