W. W. Cotton. Sheet 1. 2 Sheets.

Envelope Mach.

No. 14625. Patented Jan. 8. 1856.

Fig. 1.

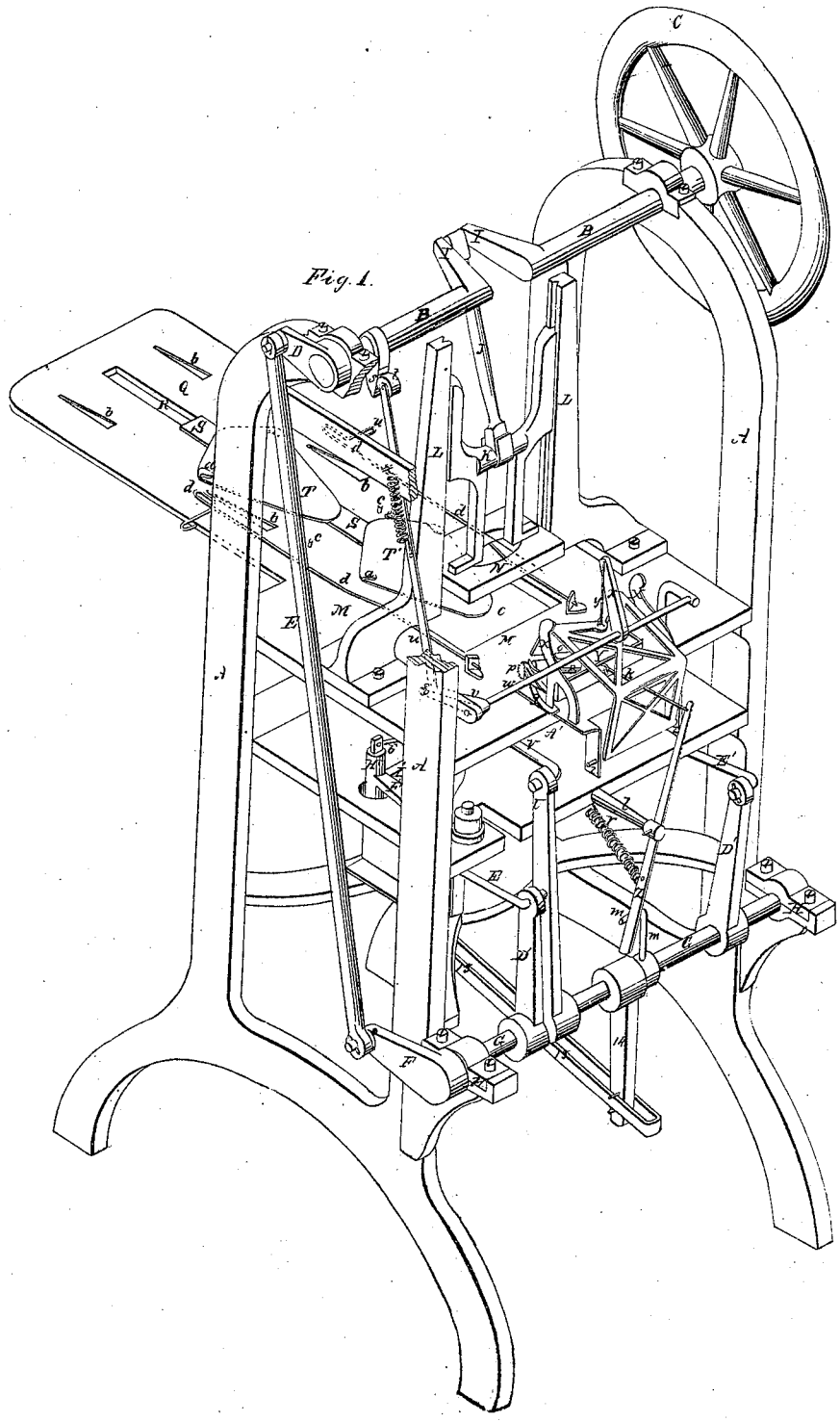

W. W. Cotton. Sheet 2. 2 Sheets.

Envelope Mach.

No. 14025. Patented Apr. 8. 1856.

Fig. 2.

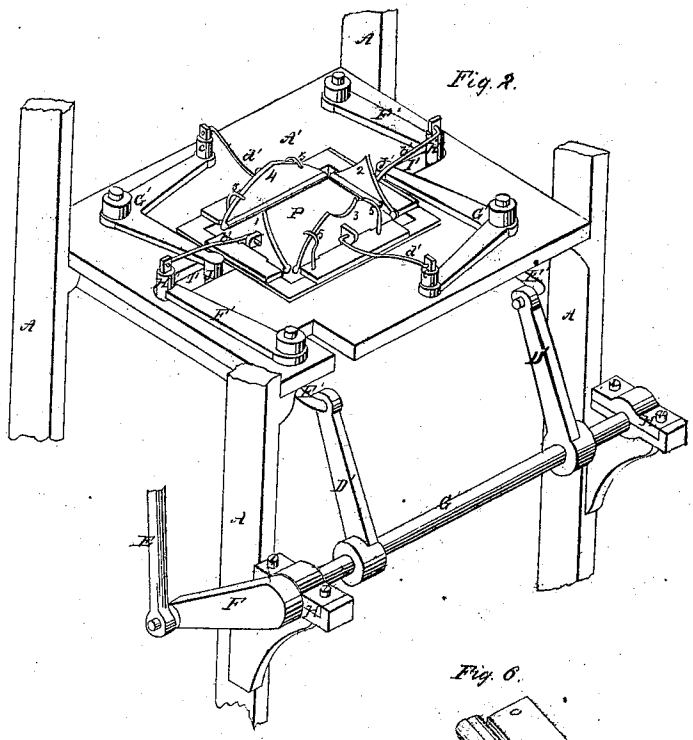

Fig. 5.

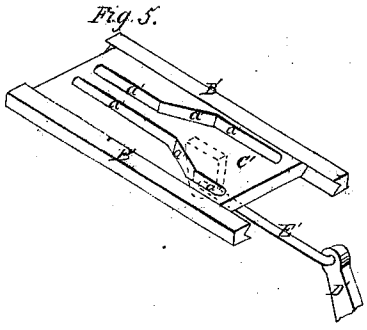

Fig. 3.

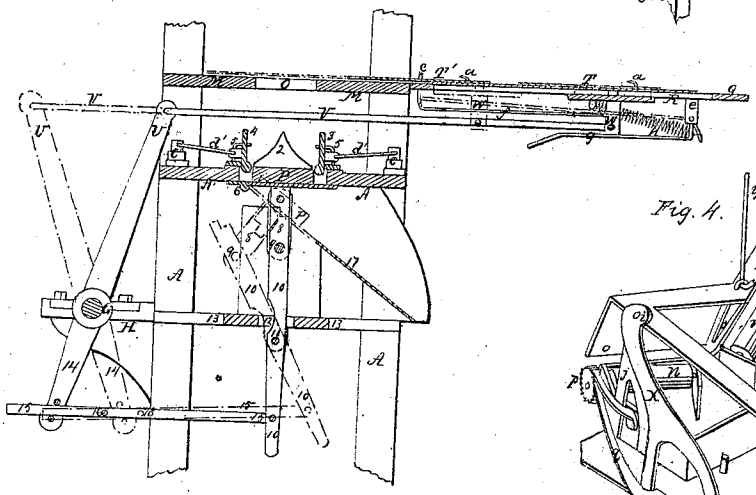

Fig. 6.

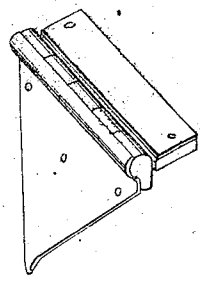

Fig. 4.

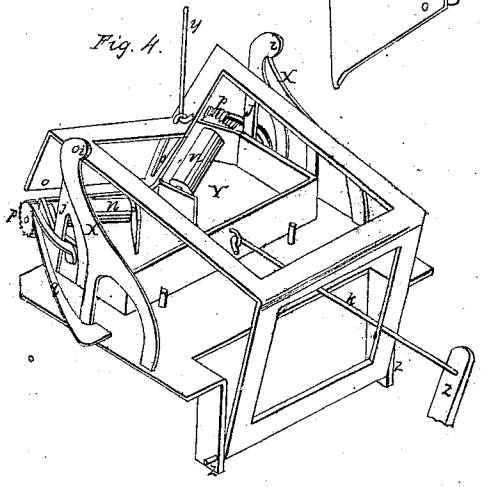

UNITED STATES PATENT OFFICE.

WILLIAM W. COTTON, OF NEW YORK, N. Y.

MACHINE FOR MAKING ENVELOPES.

Specification forming part of Letters Patent No. **14,625**, dated April 8, 1856.

To all whom it may concern:

Be it known that I, WILLIAM W. COTTON, of New York, in the county of New York and State of New York, have invented certain new and useful Improvements in Machines for Making Envelopes; and I do hereby declare the following to be a full, clear, and exact description of the same, reference being had to the accompanying drawings, making part of this specification, in which—

Figure 1 represents a perspective view of the entire machine. Fig. 2 represents in perspective the folding-plates and the parts in immediate connection with them. Fig. 3 represents a vertical section through the operative parts of the machine, showing their different positions or movements by red and black lines. Fig. 4 represents in perspective and on an enlarged scale the pasting apparatus detached from the machine. Fig. 5 is a perspective view of one of the cam-plates detached, which operate the folding-leaves to turn down the flaps of the envelope. Fig. 6 is a perspective view, on an enlarged scale, of one of the folding-leaves detached.

Similar letters, where they occur in the several figures, denote like parts in all.

The nature of my invention relates to the construction and operation of a machine for folding and pasting envelopes, wherein the sheets or blanks are fed in, the edges of the flap pasted, and the flaps folded down, and the envelope thrown out of the machine automatically in a manner that will be hereinafter described.

To enable those skilled in the art to make and use my invention, I will proceed to describe the same with reference to the drawings.

A represents a substantial frame suitably braced and arranged for receiving the operating parts of the machine.

B is a double-crank shaft with a balance-wheel C upon it, through which motion is communicated to the machine by hand or any other power. To one of the cranks D, on the shaft B, is connected by one of its ends a connecting-rod E, the other end of which rod is attached to a crank F on the shaft G, suitably supported in bearings H, attached to the frame A, at what may be termed the "rear" of the machine.

By means of the above-described parts and their connections the revolving motion of the shaft B gives a rocking motion to the shaft G, and through these two shafts all the necessary movements are given to the various parts of the machine.

At about the center of the shaft B is a crank I, to which is attached one end of the pitman J, the other end of said pitman being connected to a cross-head K, which moves in guides L L, firmly attached to the top plate M of the machine. Underneath the cross-head K, but connected with it, is a follower N, which, as it descends, carries the blank or sheet to be folded (and which has been previously placed under it by the feeding apparatus) down through an opening O in the top plate M, which opening, being of the exact size of the envelope when folded and corresponding also with the follower in size and shape, folds or bends up the flaps of the envelope and deposits it on the folding-block P, where it is afterward entirely completed, as will be hereinafter explained.

Q is a table (which may be a prolongation of the top plate M) through the center of which, longitudinally, is cut a slot R for the plate S, which carries the feeders T T′ to traverse through said plate, receiving its traversing movement from the arm U on the rock-shaft G through the connecting-rod V, which is attached to said arm U and to a piece W, projecting from the under side of the plate S, as seen in Fig. 3.

The feeding-plates T T′ have lips *a a* upon them, which catch into the corners of the blanks and not only adjust the blank properly as it is progressed toward the folding apparatus, but carry it there at the exact time that the follower in its descent will take and carry it down to the folders. Upon the table Q are two inclined planes *b*, one on each side of the path of the feeding-plates. As the blanks are caught and carried forward by the first feeding-plate T they pass over the inclined planes *b b*, and, catching under their projecting ends, there remain, while said plate T returns for another blank. Just previous to the return of the plate T, or, rather, while it is still carrying up the blank, two points *c c* are thrown up from below the table, which catch and hold the blank, these points fitting into the front corners of the blank as the lips *a a* do in the rear corners,

so that there are four devices at the four scallops or corners of the blank, all tending to place it in the exact position required to pass through the upper plate to the folders on the plate below it.

d d' are guards under which the extended end flaps of the envelope pass to keep it from rising from the feeding-plates or from leaving them. The points *c c* are operated as follows: Underneath the front end of the table Q are projections *e*, Fig. 3, in which rest a rock-shaft having two long arms *f* extending therefrom, and each terminating in one of the points or stops *c*. Upon the same shaft is also placed a cam-shaped bar *g*, against which the projection W strikes as it comes back, and, giving to the shaft to which it is attached a partial rotation, draws the stops *c c* down through the table. The stops are held in this position so long as the projection W remains upon the bar *g;* but as soon as the projection W leaves the bar a coiled spring *h* rolls the shaft back again and throws up said points in time to catch the blank when it arrives there.

It will be perceived that there are two feeding-plates, and that the first one T only carries up the blank half-way from where it received it to the folding apparatus, and there leaves the blank and returns for a second one. From the point where T leaves the blank it is again caught and carried up the remaining distance by the second feeding-plate T', which leaves it immediately over the opening O and held in readiness for the follower, while the plate T' returns to bring up the succeeding blank.

The object in having two feeding-plates, each one carrying up the blank one-half of the distance, instead of a single feeding-plate carrying it up the whole distance is this, that the product of the machine is only limited by the quantity of sheets that can be fed to it, the feeding being the most difficult portion of the operation. If a single feeding-plate were used, there would not be time sufficient at its return movement to lay on the sheet. Besides, while the envelope is being made, at which period there might be a momentary stoppage of the feeding-plate without detriment, it (the feeding-plate) is not in any convenient position for receiving the blank, as it has not yet returned clear of the moving parts of the machine, and the feeding could not readily be done until it was clear of the machine. The long distance it would have to travel would require it to be kept in constant motion to keep pace with the other parts of the machine with which it must keep perfect time; but by using the double plates it will be seen that the one T is ready to receive the blank when the other T' has only traveled half-way between the folding apparatus and the feeding-point, and that each one traveling but half the distance need only have half the velocity that a single feeding-plate would require to move through the whole distance. Besides, the plate T, which receives the sheet or blank, is always under the eye of the operator and can the better be kept pace with on that account.

When the blank is brought up and deposited immediately over the opening, through which it is afterward to pass, the paste is applied which fastens the flaps together after they are folded down, as follows: X X are two supporting-brackets attached to the top plate M. To these brackets are pivoted at *i i* (see Fig. 4) the arms *j j*, which support the gum or paste box Y. To said paste-box is attached one end of a rod *k*, the other end of said rod being connected to the upper end of a lever Z, which is pivoted in an arm *l*, projecting from the lower or folding plate. A bent arm *m* on the rock-shaft G strikes against the lower end of the lever Z and throws or carries the paste-box forward and upward until the paste-rolls *n n* are brought in contact with the pasters *o o*, which, receiving a portion of the paste or gum, carries it (by a movement that will be hereinafter described) down and places it upon the edge of the large flap, which afterward is folded down upon the end flaps, and thus pastes the whole together. The paste-rolls *n n* rotate in the paste-box for bringing up to the pasters *o o* a fresh supply. This rotation is achieved through the ratch-wheels *p p* on the shafts of the rolls and the stationary pawls *q q*, against which said ratchets strike, as the paste-box is drawn downward and backward by the contraction of the coiled spring *r*, connected to the lever Z, after said lever is released from the action of the arm *m*.

The pasters *o o* are operated as follows: On the main shaft B is a cam or toe *s*, which, as it revolves with said shaft, strikes against a friction-roll *t* in the upper end of bar *u*. The lower end of the bar *u* is attached to an arm *v* on a rock-shaft *w* and imparts to said shaft its rocking motion. On the shaft *w* is another arm *x*, to which the pasters are attached by a stirrup *y*. The frame carrying the pasters is pivoted at *z*. Thus the paste-box operated from the rock-shaft G and the pasters operated from the main shaft B keep perfect pace with each other and with the other moving parts of the machine. The raising up of the pasters after they have deposited the gum on the flap of the envelope is done by the contraction of the coiled spring and connected to the bar *u*. The blank envelope having been furnished with the paste which is to stick its flaps together is pushed through the opening O by the follower N, and has its four flaps partially turned or folded up by the operation and laid upon the block P, where the four folders 1 2 3 4 immediately fold down the flaps in the following order, viz: When the end flaps are not long enough to overlap each other, the folders 1 2 may come down together; next the folder 3 falls, which bends down the pasted flap, and, lastly, folder 4 falls and completes the envelope. The four folders are all operated from the rock-shaft G, and the variable motion they have is given to them by

the peculiar shape or lead of the cams operating them. Should the end flaps overlap, then the folders should come down in their numerical order, which can readily be done by a slight variation of the cam-slots operating them. The folding and delivering devices are arranged and operated together as follows: Underneath the folding or lower plate A′ are grooved ways B′, Fig. 5, in which cam-slotted plates C′ are made to reciprocate by means of the arms D′ D′ on the rock-shaft G and the rods E′ E′ connecting them together. On top of the plate A′ are pivoted at the opposite corners two straight levers F′ F′ and two bell-crank levers G′ G′, Fig. 2. In the points of the straight levers F′ are pins H′, which pass through openings I′ in the plate A′, and thence into the slot *a′* in the plate C′, Fig. 5. The slots *a″* are so made that the plate may move through the greater part of its path without moving the pin or stud H′, or until the sharp or abrupt part of the cam-slot *a″* takes it, when it is suddenly moved and then rests until that part of the cam returns again. From the tops of the pins H′ extend rods *b′*, which are fastened, respectively, to the hinged folders 1 2, and as said pins or studs are moved to and fro they shut down and raise up their respective folders 1 2. One arm of each of the crank-levers G′ is also provided with stud-pins J′, which, passing through the same openings I′ in the plate, pass into the cam-slots *a′* in the plate C′, and are vibrated by said cams. On the other arms of each of the bell-cranks are studs *c′ c′*, to which are attached rods *d′ d′*, extending to the folders 3 4, and in like manner operate them at proper intervals. 5 are stops to catch the folders and hold them until they are regularly operated by their respective moving parts.

At Fig. 6 an enlarged view of one of the folders is given to show its particular construction. They are what an ordinary butt-hinge would be when the hinged portion was shielded. It is found that when one part of the hinge moves and the other is stationary it will drag upon the half-made envelope and turn or twist it out of its place. Besides, there is the liability of the edges of the paper getting into the joints of the hinge and clogging up the machine. I avoid all this by so forming the hinge that it offers none of its joints to the paper and presents a uniform moving surface to the envelope.

The block P, Fig. 3, is hinged at 6 to the under side of the plate A′, and, closing up entirely the opening through said plate, becomes the bed upon which the envelope is folded, and the swell of the hinges of the folders, moving in the arc of a circle, fit up closely against the four edges of said block. On the under side of the hinged block P are stirrups 8, conecting it by a pivoted joint 9 to a lever 10, which in turn is pivoted at 11 and oscillates through the slot 12 in the brace-plate 13. The lever 10 is operated by an arm 14 on the rock-shaft G through the intervention of a slotted bar 15, having a stop or pin at 16, against which the arm 14 strikes and trips the lever 10, causing the hinged block P to drop and allow the finished envelope to drop out and fall upon the inclined board 17, by which it is directed into a receptacle where the finished envelopes are counted into regular packages. This receiving and counting apparatus, though used in connection with the above-described machine, will form the subject-matter of another application for Letters Patent. When the arm 14 returns to the end of the slot, Fig. 1, in the bar 15, it draws back said bar and throws the lever 10 into a vertical position, as seen in Fig. 3, and raises the block P into position to receive the next envelope, the vertical position of said lever 10 sustaining the block P against the action of the folders when they come against it to press down the flaps of the envelope. The blank is carried up horizontally and placed over the opening O, and there paste is put upon it. From this point it is driven down vertically, completed, and thrown out, thus having but two movements in feeding, pasting, folding, and delivering the envelope. The black lines in Fig. 3 show the positions of the several parts when the machine is ready to receive a blank, and the red lines represent the positions of the same parts when the finished envelope is thrown out of the machine.

Having thus fully described the nature of my invention, what I claim therein as new, and desire to secure by Letters Patent, is—

1. Operating the feeding, gumming, partial, and complete folding, pasting, and delivering devices from two shafts so united that the rotary motion of one shall give a rocking motion to the other, substantially in the manner herein described.

2. The feeding up of the blanks by the two feeding-plates, each one carrying it up a portion of the distance and delivering it against stops or guides, from whence it is carried through the machine and completed, as herein described.

3. The combined operation of the paste-box and pasters, the former operated from the rock-shaft, and the latter from the revolving one, through the intervention of devices substantially such as set forth.

4. In combination with the block P, the folders 1 2 3 4, the hinged joints of which are covered, and the swell of the hinges facing each other, for the purpose and substantially in the manner set forth.

5. In combination with the folders 1 2 3 4, the sliding cam-plates C′, with their several connections for operating said folders, in the order and manner substantially as described.

WM. W. COTTON.

Witnesses:
DAVID A. FOWLER,
RICHARD B. CONNOLLY.