Jan. 12, 1943. E. F. SPRUTH 2,308,396

DISPLAY CONTAINER

Filed Dec. 2, 1939 2 Sheets-Sheet 1

Fig. 1

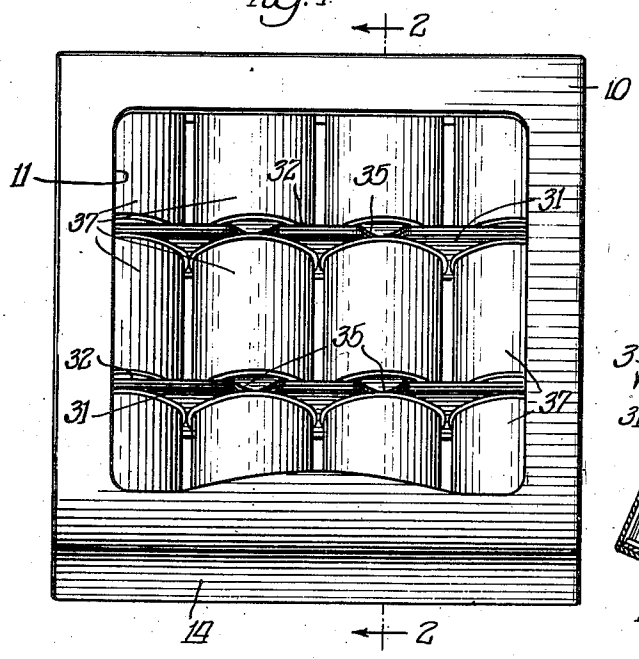

Fig. 2

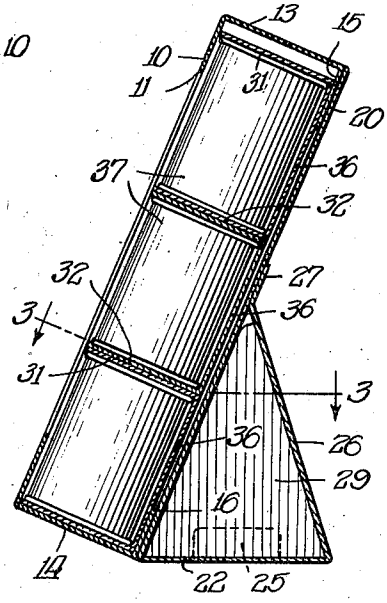

Fig. 3

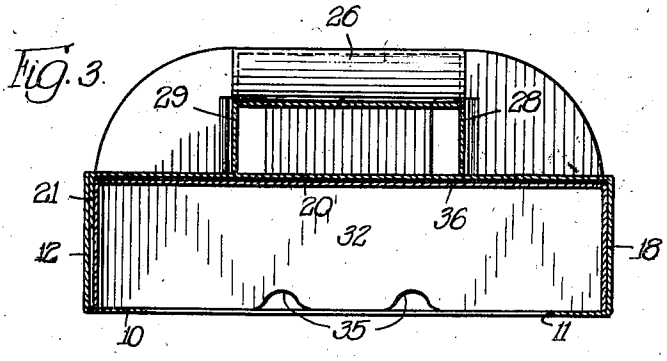

Fig. 4

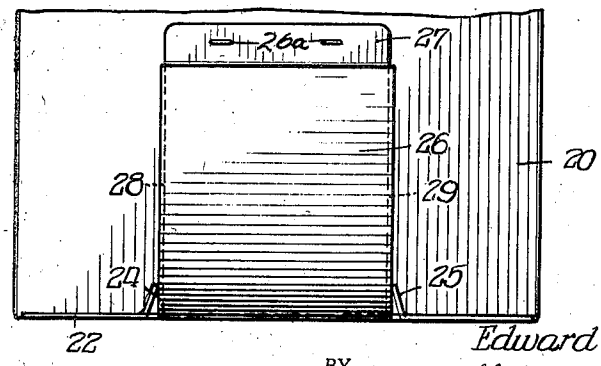

INVENTOR.
Edward F. Spruth,
BY Cromwell, Greist & Warden
ATTORNEYS.

Jan. 12, 1943. E. F. SPRUTH 2,308,396

DISPLAY CONTAINER

Filed Dec. 2, 1939 2 Sheets-Sheet 2

Fig. 5.

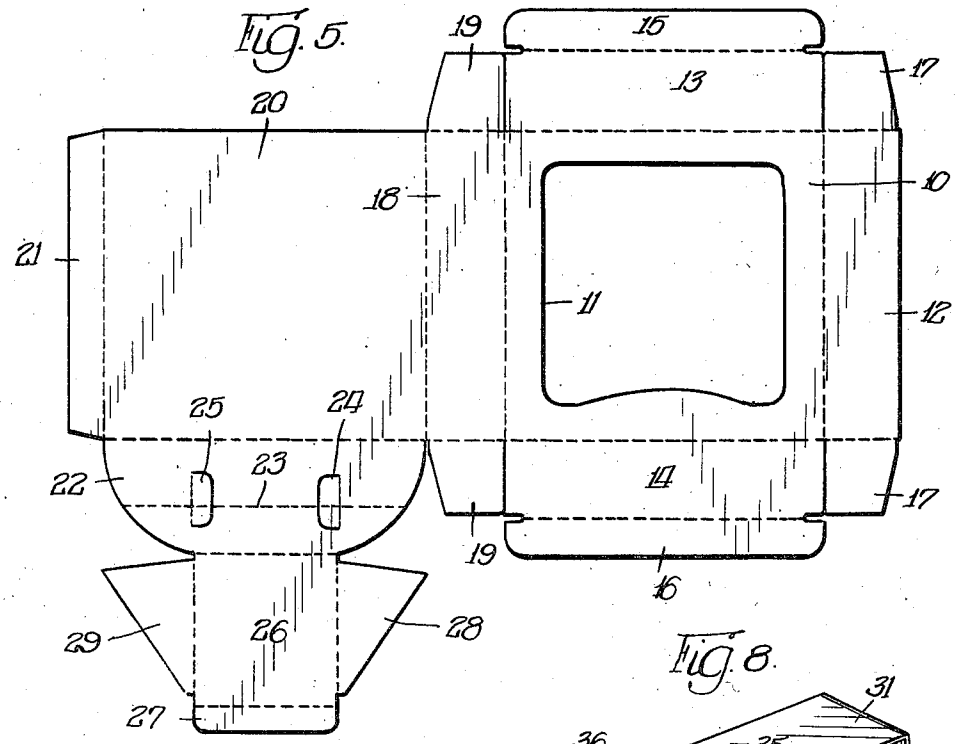

Fig. 6.

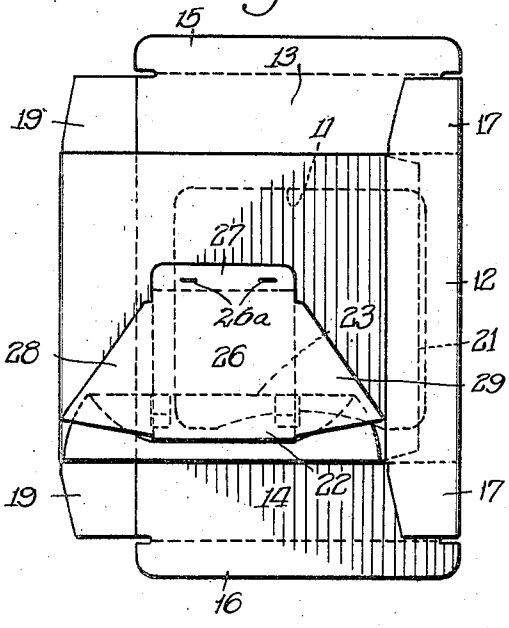

Fig. 8.

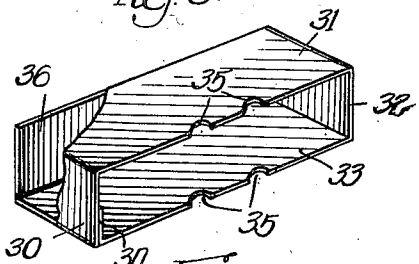

Fig. 7.

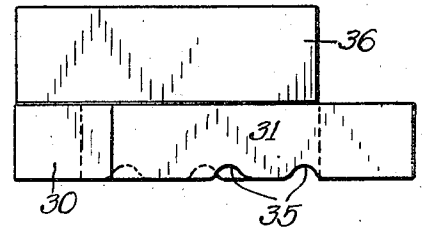

INVENTOR.
Edward F. Spruth,
BY Cromwell, Greist & Wardin
ATTORNEYS.

Patented Jan. 12, 1943 2,308,396

UNITED STATES PATENT OFFICE

2,308,396

DISPLAY CONTAINER

Edward F. Spruth, Chicago, Ill., assignor to Morris Paper Mills, Chicago, Ill., a corporation of Illinois

Application December 2, 1939, Serial No. 307,223

3 Claims. (Cl. 206—44)

The present invention relates to an improved type of display container which may be used to advantage for vending and displaying relatively heavy articles such as canned meat.

A principal object of the invention is the provision of a display container in which there is provided an improved supporting easel portion on the rear wall of the carton, the rear wall being protected against the pressing effect of the easel by a special type of tray positioned within the container.

An additional object of the invention is to provide a one-piece display carton having an open face and a collapsible easel portion integrally joined to the lower edge of the rear wall, the easel portion including a collapsible base member, an upwardly extending backing member, bracing wings hinged to the backing member and foldable across the base member adjacent retaining tongues for maintaining the easel portion in erect position.

These and other objects of the invention will be evident upon a consideration of the following specification and by reference to the accompanying drawings, in which

Fig. 1 is a front view of a display container constructed in accordance with the invention and loaded with cans of meat;

Fig. 2 is a sectional view taken along line 2—2 of Fig. 1;

Fig. 3 is a sectional view taken along line 3—3 of Fig. 2;

Fig. 4 is a fragmentary view of the back of the easel portions of the container;

Fig. 5 is a plan view of a blank from which the display container is constructed;

Fig. 6 is a view of the display container in collapsed condition;

Fig. 7 is a plan view of a special tray which is used in connection with the container; and

Fig. 8 is a perspective view broken away to show the construction of the special tray in erect condition.

It has been recognized as desirable heretofore to employ some sort of supporting device for display containers so that the contents of the display cartons can be held at an effective angle from the standpoint of purchaser observation. Many different easel constructions have been suggested, but these constructions have not been found entirely satisfactory, particularly in the packaging of commodities which are relatively heavy.

The display container shown in the drawings may be understood from a consideration of the blank of Fig. 5 in connection with the other drawings. As shown in the blank, the container includes a front wall 10 which is cut away as shown at 11 to provide an open face for the container. The front wall 10 has a side wall 12 attached along one of its edges, a top wall 13 attached along its upper edge, and a bottom wall 14 attached along its lower edge. Wall 13 has a tuck-in flap 15 of conventional structure and the bottom wall 14 has a similar tuck-in flap 16. The side wall 12 may be provided with conventional fold-in flaps 17 along its opposite ends.

At the opposite side of the wall 10 from the end wall 12 is a second end wall indicated at 18, this end wall being provided with conventional fold-in flaps 19 for closure purposes.

The side wall 18 is connected to the rear wall 20, and the latter has an attaching flap 21 which is folded over and secured to the inner side of the wall 12 to complete the formation of the carton.

On the bottom of the rear wall 20 is an easel portion, one part of which consists of the rounded backwardly extending base member 22, which is provided with an intermediate score line 23. It will be noted that the score line 23 is parallel to the lower edge of the back wall 20. The base member 22 is cut to provide inwardly extending retaining tongues 24 and 25, the attached ends of these retaining tongues being connected to the base member along suitable score lines. The tongues 24 and 25 are positioned so as to cross the score line 23, the tongues being scored along with the rest of the base member.

The unattached end of the base member 22 has attached to it a backing member 26 which has on its outer edge an attaching strip 27. Along one side of the backing member 26 is hingedly connected a bracing wing member 28, and along the other side of the backing member 26 is a similar bracing wing member 29.

To assemble the easel portion of the container the base member is folded about the score line by which it is attached to the rear wall and outwardly about the score line 23. The backing member 26 then is folded upwardly along the score line by which it is attached to the base member and the flap 27 is secured to the back wall 20 as by the staples 26a.

The assembled container and easel portion formed as described will assume the folded position shown in Fig. 6. To erect the container for loading purposes it is necessary only to square the walls.

It will be noted that the backing member 26

is secured to the rear wall of the container and when the carton is in the position shown in Figs. 1 and 2 the weight of the container and contents bears considerably against this backing member. As pressure against the backing member also has a positive reaction with respect to the rear wall 20 display containers of this general type have a tendency to be unstable. This tendency is offset in accordance with the present invention by the use of a special type of tray. This tray is shown in Figs. 7 and 8 and consists of a unitary piece of paper board material cut, scored and folded to form an end wall 30, a top wall 31, a second end wall 32, and a bottom wall 33. The continuous strip from which these walls are produced is folded over, as indicated in Fig. 7, and the end wall 30 is suitably secured to a glue flap 34 attached to the rear wall. The opposing walls of the tray are parallel and collapsible diagonally. The front edges of the top and bottom walls are provided with cut-out portions 35 in order to effect more ready access to the contents of the container through the open front wall.

Trays of this general type are usually unstable, but this instability is corrected in the tray shown in the drawings by the provision of a bracing rear wall 36 which is integral with the top wall of the tray and joined thereto along a score line which permits the bracing wall 36 to be folded from the position shown in Fig. 7 to the position shown in Fig. 8, although it will be understood that this wall 36 need not be attached to the bottom wall.

To load the container shown in the drawings three of the trays are placed in superimposed relation with the flaps 36 turned downwardly. These trays are filled with cans of meat, as indicated at 37 in Figs. 1 and 2. That is, the interiors of the trays are loaded with the cans of meat to form a stack of superimposed units. The next step in the loading of the container consists in squaring the walls of the container shown in Fig. 6 and pressing the container downwardly over the stack of loaded trays. The top of the container then can be closed and the container may be inverted for closure of the bottom. The trays are wider than the opening in the front wall and when loaded in the manner described the canned products are accessible directly through this opening. To assist in withdrawing the cans it is possible to reach inwardly through the openings 35 in the trays.

After the container is loaded as described and shipped to a merchant, the container is folded into the display position shown in Figs. 1 and 2 by pressing the collapsed base member 22 into plane position, rotating the bracing wings 28 and 29 across the base member and score line 23 to a position adjacent the retaining tongues 24 and 25. After the wings have passed the free edges of the tongues 24 and 25 the tongues are pressed upwardly into the position shown in Fig. 4. The natural resiliency of the material from which the container is produced causes the wings 28 to tend to press outwardly against the retaining tongues. The engagement of the wings 28 and 29 across the upper face of the base member prevents the latter from again collapsing along the score line 23. The free edges of the bracing members 28 and 29 can be made to extend adjacent the back wall 20, thereby affording a further bracing effect for the container. Potted meats and similar products are quite heavy and the bracing effects of the trays as well as the wing members are important factors in the provision of a stable carton.

When it is desired to collapse the cartons from the display position shown in Fig. 2 it is necessary only to depress the tongues 24 and 25 and fold the bracing wings 28 and 29 outwardly to allow for the collapse of the backing member 22 along the score line 23.

The display assembly described is simple yet quite effective and is particularly desirable with respect to the stability necessary in the case of cartons of this character. Unless the carton is quite stable the weight of the product will cause the carton to fall down when erected in display condition. The container itself is formed from a one-piece blank, as is the tray. The arrangement of the various elements is such that the requisite strength is obtained without use of unduly heavy board, thereby decreasing the weight of the package as well as its expense.

It will be seen that many changes in the structure described and shown in here by way of explanation may be changed without departing from the scope of the invention as defined in the appended claims.

I claim:

1. A display carton, comprising a blank cut, scored and folded to form an open faced front wall, side walls, a top, a bottom, and a rear wall having an integral collapsible easel portion joined along its lower edge, said easel portion including a backwardly extending base member collapsible along an intermediate score line, a retaining member extending across said score line, an upwardly extending portion secured to said rear wall, and a brace member hingedly connected to said upwardly extending member and being foldable into a bracing relationship with said rear wall across said backwardly extending member adjacent said retaining member for maintaining said easel portion in extended condition.

2. A display carton, comprising a blank cut, scored and folded to form an open faced front wall, side walls, and a rear wall having an integral collapsible and extensible easel portion joined along its lower edge, said easel portion including a backwardly extending base member collapsible upwardly along an intermediate score line and having two upwardly extendable retaining tongues crossing said score line, an upwardly extending backing member secured to said rear wall, and bracing wing members hingedly connected to said upwardly extending backing member and being foldable across said base member across said score line adjacent said retaining tongues in bracing relationship with said rear wall for maintaining said easel portion in extended condition.

3. A display carton, comprising a blank cut, scored and folded to form an open faced front wall, side walls, a top, a bottom, and a rear wall having an integral collapsible easel portion joined along its lower edge, said easel portion including a backwardly extending base member collapsible along an intermediate score line, a retaining member extending across said score line, an upwardly extending portion secured to said rear wall, and a brace member hingedly connected to said upwardly extending member and being foldable into a bracing relationship with said rear wall across said backwardly extending member adjacent said retaining member for maintaining said easel portion in extended condition, and a display tray associated with said easel display carton, said tray having parallel supporting walls

joined to and spaced from each other by upright end walls, said walls being diagonally collapsible, and a free bracing flap integrally joined to the rear edge of one of said supporting walls of said tray and being foldable into a supporting position exteriorly of said tray walls, said flap being retained in said folded supporting position by confinement of said tray in set-up position within said carton with said bracing flap reinforcing the rear wall of said carton by abutting the same and receiving the thrust of said upwardly extending portion secured to the rear wall of said carton.

EDWARD F. SPRUTH.