(12) INTERNATIONAL APPLICATION PUBLISHED UNDER THE PATENT COOPERATION TREATY (PCT)

(19) World Intellectual Property Organization
International Bureau

(43) International Publication Date
21 July 2005 (21.07.2005)

PCT

(10) International Publication Number
WO 2005/066581 A1

(51) International Patent Classification[7]: G01B 11/30

(21) International Application Number:
PCT/US2004/043011

(22) International Filing Date:
21 December 2004 (21.12.2004)

(25) Filing Language: English

(26) Publication Language: English

(30) Priority Data:
60/532,492 24 December 2003 (24.12.2003) US

(71) Applicant: **3M INNOVATIVE PROPERTIES COMPANY** [US/US]; 3M Center, Post Office Box 33427, Saint Paul, Minnesota 55133-3427 (US).

(72) Inventor: **WILHELM, Justin, W.**; Post Office Box 33427, Saint Paul, Minnesota 55133-3427 (US).

(74) Agents: **EDMAN, Sean, J.** et al.; Office of Intellectual Property Counsel, Post Office Box 33427, Saint Paul, Minnesota 55133-3427 (US).

(81) Designated States *(unless otherwise indicated, for every kind of national protection available)*: AE, AG, AL, AM, AT, AU, AZ, BA, BB, BG, BR, BW, BY, BZ, CA, CH, CN, CO, CR, CU, CZ, DE, DK, DM, DZ, EC, EE, EG, ES, FI, GB, GD, GE, GH, GM, HR, HU, ID, IL, IN, IS, JP, KE, KG, KP, KR, KZ, LC, LK, LR, LS, LT, LU, LV, MA, MD, MG, MK, MN, MW, MX, MZ, NA, NI, NO, NZ, OM, PG, PH, PL, PT, RO, RU, SC, SD, SE, SG, SK, SL, SY, TJ, TM, TN, TR, TT, TZ, UA, UG, US, UZ, VC, VN, YU, ZA, ZM, ZW.

(84) Designated States *(unless otherwise indicated, for every kind of regional protection available)*: ARIPO (BW, GH, GM, KE, LS, MW, MZ, NA, SD, SL, SZ, TZ, UG, ZM, ZW), Eurasian (AM, AZ, BY, KG, KZ, MD, RU, TJ, TM), European (AT, BE, BG, CH, CY, CZ, DE, DK, EE, ES, FI, FR, GB, GR, HU, IE, IS, IT, LT, LU, MC, NL, PL, PT, RO, SE, SI, SK, TR), OAPI (BF, BJ, CF, CG, CI, CM, GA, GN, GQ, GW, ML, MR, NE, SN, TD, TG).

Declarations under Rule 4.17:

— *as to applicant's entitlement to apply for and be granted a patent (Rule 4.17(ii)) for the following designations AE, AG, AL, AM, AT, AU, AZ, BA, BB, BG, BR, BW, BY, BZ, CA, CH, CN, CO, CR, CU, CZ, DE, DK, DM, DZ, EC, EE, EG, ES, FI, GB, GD, GE, GH, GM, HR, HU, ID, IL, IN, IS, JP, KE, KG, KP, KR, KZ, LC, LK, LR, LS, LT, LU, LV, MA, MD, MG, MK, MN, MW, MX, MZ, NA, NI, NO, NZ, OM, PG, PH, PL, PT, RO, RU, SC, SD, SE, SG, SK, SL, SM, SY, TJ, TM, TN, TR, TT, TZ, UA, UG, UZ, VC, VN, YU, ZA, ZM, ZW, ARIPO patent (BW, GH, GM, KE, LS, MW, MZ, NA, SD, SL, SZ, TZ, UG, ZM, ZW), Eurasian patent (AM, AZ, BY, KG, KZ, MD, RU, TJ, TM), European patent (AT, BE, BG, CH, CY, CZ, DE, DK, EE, ES, FI, FR, GB, GR, HU, IE, IS, IT, LT, LU, MC, NL, PL, PT, RO, SE, SI, SK, TR), OAPI patent (BF, BJ, CF, CG, CI, CM, GA, GN, GQ, GW, ML, MR, NE, SN, TD, TG)*

— *as to the applicant's entitlement to claim the priority of the earlier application (Rule 4.17(iii)) for all designations*

Published:

— *with international search report*

[Continued on next page]

(54) Title: DEVICE AND METHOD FOR MEASURING THE PROFILE OF A SURFACE

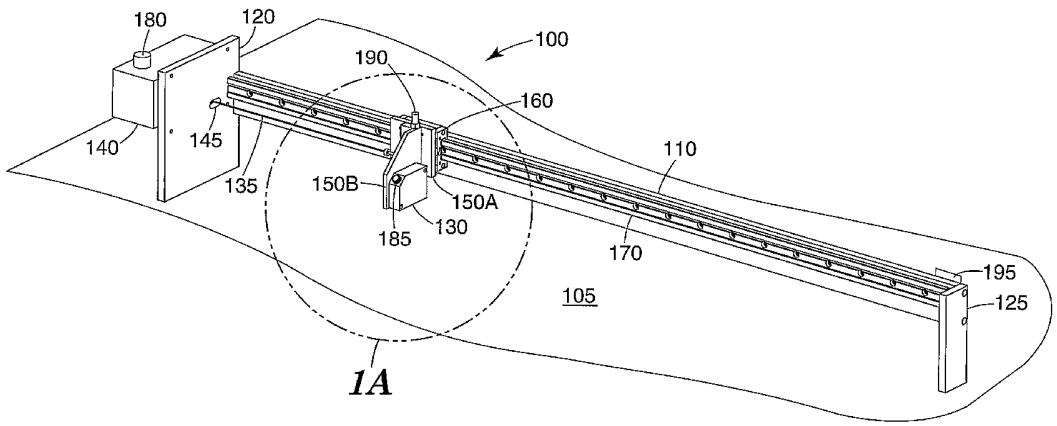

(57) Abstract: The invention provides a surface profile measurement device for use on rigid or semi-rigid substrates, such as floors. The device includes (a) a beam; (b) at least one beam support mounted on the beam; (c) a sensor assembly slidably connected to said beam and adapted for measuring the distance to the surface; and (d) a transducer assembly adapted for measuring the position of said sensor assembly along said beam.

WO 2005/066581 A1

For two-letter codes and other abbreviations, refer to the "Guidance Notes on Codes and Abbreviations" appearing at the beginning of each regular issue of the PCT Gazette.

DEVICE AND METHOD FOR MEASURING THE PROFILE OF A SURFACE

Field of the Invention

The invention relates generally to surface profile measurement devices and more particularly to two-dimensional, non-contact mapping devices for use on rigid or semi-rigid substrates, such as floors.

Background

The translation of a surface profile into a quantifiable record is commonly performed with either digital or analog devices that have one component that measures linear position parallel to the surface and another component that measures a relative distance normal to the surface. In the most simplistic method, a straight edged linear measurement device, such as a ruler, is laid on the surface and a second linear measurement device is used to quantify the normal distance from the straight edge to the surface. In most cases, the surface is contacted with the tip of a linear measurement device, positioned perpendicular to the general plane of the surface. In the case of a horizontal surface, the measurement device indicates the vertical position of the tip relative to its horizontal position along the surface. A record of the vertical position of the tip is made either by an attachment to the tip itself, such as a pen onto graph paper, electronically, such as data acquisition software in a computer, or manually by the operator of the device. Resolution of the recorded data is dependent upon the ability of the normal linear measurement device to maintain contact with the surface while maintaining orientation normal to the surface and the ability of the tip to fit into any crevices along the surface.

In measurement devices that use non-contact technology to determine the normal distance from its face to the surface, the relative horizontal placement is generally accomplished with sophisticated components such as rate gyroscopes. These devices are typically robotic in nature and self-propelled along the surface. For this type of device, resolution parallel to the surface relies on the accuracy of

the transportation device. The functionality of this type of device is limited to horizontal surfaces. In addition, the complexity of this type of device translates to high cost.

Summary

The present invention features a device for measuring the profile of a surface. The device includes (a) a beam; (b) at least one beam support mounted on the beam; (c) a sensor assembly slidably connected to the beam and adapted for measuring the distance to the surface; and (d) a transducer assembly adapted for measuring the position of said sensor assembly along said beam.

In various embodiments of the invention, the sensor assembly comprises a laser triangulation sensor and the transducer assembly comprises a cable, such as a spring loaded cable, attached to the sensor array.

In other embodiments, the device may further include a leveling apparatus and leveling means to aid in the positioning of the beam relative to the surface being measured. The device may also include a motor or a carriage knob for laterally positioning the sensor assembly on the beam.

In yet another embodiment, the sensor assembly and/or the transducer assembly may be connected to a data acquisition apparatus, such as a portable computer, for storing and processing information.

In another aspect, the invention provides a method for measuring the profile of a surface, such as a floor, which method includes the following steps: (a) placing a sensor assembly at a first position along a beam; (b) measuring the distance from the sensor assembly to the surface at the first position; (c) measuring the lateral position of the sensor assembly on the beam at the first position; (d) placing the sensory assembly at a second position along a beam; (e) measuring the distance from the sensor assembly to the surface at the second position; and (f) measuring the lateral position of the sensor assembly on the beam at the second position. The pairs of collected measurements may then be transmitted to a data acquisition

device for storage and/or processing. Using these measurements, a two dimensional profile of the surface can be created.

Other features and advantages of the present invention will be apparent from the following detailed description thereof, from the figures, and from the claims.

Brief Description of the Drawings

FIGURE 1 is a schematic diagram showing an oblique view of an exemplary device according to the invention.

FIGURE 1A shows an expanded view of the interaction between the sensor assembly and the surface being measured.

FIGURE 2 is a schematic diagram of an exemplary surface profiling device positioned over a surface to be measured.

FIGURE 3 is a schematic diagram showing a cross-section of the exemplary device depicted in FIG. 1.

Detailed Description

The present invention is directed generally to a device, referred to herein as a portable profilometer, which measures the profile of a non-moving surface by a non-contact method. In one embodiment, the profilometer comprises a beam supported by one or more beam supports on the surface to be measured. A sensor assembly disposed on the beam is able to traverse along a bearing track on the beam. The beam supports permit disposition of the beam and sensor assembly a certain distance away from and generally parallel to the surface. During traverse of the sensor assembly along the beam, the sensor assembly provides information to a data acquisition device regarding the distance of the surface from the sensor assembly. At the same time, a position transducer provides information to the data acquisition device regarding the lateral distance of the sensor assembly along the bearing track. As the sensor traverses the beam, an algorithm executed within the data acquisition system records a signal from the sensor at user-defined increments

of the lateral distance as measured by the position transducer. Once the traverse is complete, the pairs of collected data points are stored by the algorithm and are used to define a two dimensional depiction of the surface profile along the chosen orientation.

The surface profilometer of the present invention can be used to determine the profile of surfaces on both a micro- and macro-scale. Surfaces that can be profiled using the device include countertops, walls, floors, and ceilings. Surface materials can include wood, concrete, plastic, glass, metal, and other rigid or semi-rigid materials. The inventive profilometer can be used to determine the general deviation of the surface from planarity, i.e., the contour profile or waviness of a surface. The profilometer can also be used to determine a macrostructure of the surface, such as, for example, the porosity of a poured concrete wall or the coarseness of an abrasive material. Furthermore, the profilometer of the present invention may be used to determine the topography of a micro-structured surface.

FIG. 1 depicts one embodiment of a surface profilometer according to the present invention. Profilometer **100** (shown as **200** in FIG. 2) comprises a beam **110** having a left beam support **120** near one end and a right beam support **125** near the opposite end. A sensor assembly **130** is attached to a bearing **160** by means of optional sensor supports **150A** and **150B**. The bearing **160** is in slidable contact with the bearing track **170** and can be caused to traverse along the bearing track by manual force exerted parallel to the beam **110** by means of the carriage knob **190**. The lateral position of the sensor assembly **130** along the beam **110** is detected by a position transducer assembly **140** by means of the cable **135** attached at one end to the position transducer assembly **140** and at the other end to the sensor support **150B**. In the embodiment shown in FIG. 1, the position transducer assembly **140** is mounted on one side of the left beam support **120** and the cable **135** passes through the cable aperture **145** disposed in the left beam support **120**. When the profilometer is in use, information relating to the distance of the surface **105** (shown as **205** in FIG. 2) from the sensor **130** is relayed from the sensor **130** via the

sensor output port **185** to a data acquisition device (not shown). Simultaneously, information relating to the lateral distance of the sensor assembly **130** along the beam **110** is relayed from the position transducer assembly **140** to the data acquisition device by means of the transducer output port **180**.

The beam **110** may be constructed of any material and cross-sectional geometry which provides flex resistance during traverse of the sensor assembly **130** along the beam. Materials suitable for construction of the beam **110** include any materials with sufficient rigidity to resist deflection of a significant magnitude relative to the desire precision of the measurements. Suitable materials include metals, plastics, wood, and the like. Metals can include, but are not limited to, aluminum, steel, iron, copper, brass, and nickel. Aluminum is a particularly suitable metal because of its large strength to weight ratio. Suitable plastics include engineering materials such as nylon, polyolefins, and polyester. The cross-section of the beam **110** (shown as **310** in FIG. 3) can be any geometry including but not limited to rectangular, circular, ellipsoidal, and triangular .

The beam **110** is typically machined or otherwise formed in one piece. One-piece beam construction is considered to provide maximum stability and support to the bearing track **170** and to the sensor assembly **130**. It is contemplated that for some applications the beam **110** and bearing track **170** can be hinged or otherwise adapted to being folded for convenience in storage or handling.

The beam **110** is supported adjacent one end by left beam support **120** and adjacent the other end by right beam support **125**. The two beam supports can be made of any rigid material and can be of any suitable geometry. The function of the two beam supports is to suspend the beam over the surface to be measured. It is not required that the beam **110** be maintained in a horizontal position, and therefore, it is not required that left beam support **120** and right beam support **125** be adjustable, although they may be adjustable if so desired. For certain embodiments, it is envisioned that a leveling device **195** and leveling means could be attached to or built into the profilometer **100** to aid in positioning the beam generally parallel to

the surface being measured. Such leveling means are particularly useful where the measured topology is relative to horizontal. An exemplary leveling device could be a bubble level. Exemplary leveling means could comprise one or more adjustable threaded screws attached to each beam support **120** and **125**.

Where the surface to be measured is horizontal, such as a floor, the profilometer is generally held in place by gravity. Where the surface is a wall or other vertical surface, the beam supports may be equipped with a suction device or similar means for holding the profilometer onto the surface being measured.

Since the sensor assembly **130** traverses between the two beam supports, the distance between the left beam support **120** and the right beam support **125** determines the maximum length of the surface to be measured by the profilometer. For the measurement of a large area surface, for example a span of ten feet or more, it may be advantageous to provide one or more optional adjustable beam supports disposed at intervals along the beam **110** between the left beam support **120** and the right beam support **125**. The adjustable beam supports are attached at one end to the beam **110** and are adjustable to just provide contact with the surface **105** so as to provide enhanced flex resistance to the beam **110** during traverse of the sensor assembly **130**.

The bearing track **170**, also depicted in cross-section as **370** in FIG. 3, is supported by and preferably attached to the beam **110** (shown as **310** in FIG. 3). The sensor assembly **130** (shown as **330** in FIG. 3) is slidably attached to the bearing track **170** by means of the bearing **160** (shown as **360** in FIG. 3), allowing the sensor assembly **130** to be moved to any position along the length of the beam **110**. The cross-sectional geometry of the bearing **160** is the inverse of the cross-sectional geometry of the bearing track **170**. The more precisely the bearing geometry matches the bearing track geometry, the less random movement of the bearing against the bearing track and therefore the more precise the measurements attainable by the profilometer.

It is desirable that the bearing **160** and the bearing track **170** be constructed of the same materials. Materials suitable for construction of the bearing track **170** and bearing **160** include metals, plastics, and the like. Metals can include, but are not limited to, aluminum, steel, iron, copper and brass and nickel. Typically, both the bearing and the bearing track of constructed of aluminum. Suitable plastics can include engineering materials such as nylon, polyolefins, and polyester. As with the beam **110**, the bearing track **170** is typically machined or otherwise formed in one piece along its length. One-piece bearing track construction provides smooth transit to the sensor assembly **130** as it traverses along the bearing track thereby providing maximum precision to the data output by the sensor **130**.

One or more optional sensor supports depicted as **150A** and **150B** in FIGs 1 and 1A (and **350A** and **350B** in FIG. 3) may be used to permit the sensor assembly **130** to be mounted on the bearing **160** in an advantageous position. For example, the sensor assembly **130** is shown in FIG. 1 positioned perpendicular to the beam **110** by means of sensor supports **150A** and **150B**. In this position, the cable **135** (depicted as **235** in FIG. 2) can be conveniently attached to sensor support **150B** by means of the cable attachment depicted as **247** in FIG. 2. In another embodiment, the sensor assembly **130** can be positioned parallel to the beam **110** by mounting the sensor assembly **130** directly onto the sensor mount **150A**. The sensor assembly **130** can also be mounted directly on the bearing **160**.

Referring now to FIGs. 1 and 1A, an emitter (not shown) in sensor assembly **130** emits a beam of energy **132**, which reflects from surface **105** towards a receiver (not shown) in the sensor assembly **130** along path **134**. The sensor assembly **130** transmits the received information via the sensor output port **185** to a data acquisition device, such as, for example, a laptop computer. Signal processing converts the received information into, for example, vertical position information. At the same time, the position transducer **140** transmits via the transducer output port **180** (shown as **380** in FIG. 3) information related to the lateral position of the sensor assembly **130** along the bearing track **170**. Transmission of data from either

output port can be by a wired connection between the port and the data acquisition device. Transmission of data can also be by other means such as radio frequency, infrared frequency communication, or another form of wireless communication.

A typical sensor assembly **130** is a laser triangulation sensor such as that sold by Micro-Epsilon, Raleigh, NC under the tradename "optoNCDT 1400" Model Number ILD 1400-50. The choice of sensor can be determined by one of ordinary skill in the art and will be dictated, in part, by the desired resolution of the measurement and the distance of the sensor assembly from the surface to be measured. Generally some form of non-contact sensor is used. Suitable sensor options include, but are not limited to, ultrasonic time of flight, laser time of flight, and, for close up measurements of small changes, capacitive or inductive (including eddy current) displacement sensors.

Referring again to FIG. 1, the lateral position of the sensor assembly **130** as it traverses along the bearing track **170** is determined by the position transducer assembly **140**. In the embodiment shown, the position transducer assembly **140** comprises a spring-loaded cable housed within the position transducer assembly **140**. The cable **135** is attached at one end within the position transducer assembly, passes through the cable aperture **145** in the left beam support **120,** and attaches at the other end to the sensor support **150B** by means of the cable attachment **247** (see FIG. 2). In one embodiment, the position transducer assembly **140** can be a cable device such as that sold by Celesco Transducer Products, Chatsworth, CA under the tradename "PT5DC Cable Extension Position Transducer." The cable **135** is maintained under tension within the position transducer assembly **140**. It is also contemplated that any measurement system that permits determination of lateral position of the sensor assembly along the beam would be suitable for use as a position transducer. Examples of other suitable measurement systems include laser sensors ,ultrasound sensors, linear resisive devices, and optical or magnetic encoders.

Carriage knob **190** in FIG. 1 (and **390** in FIG. 3) permits the user of the profilometer **100** to translate manually the sensor assembly **130** laterally along the bearing track **170**. In one embodiment of the inventive profilometer, the position transducer assembly **140** in FIG. 1 (depicted as **340** in FIG. 3) comprises means to maintain tension on cable **135** so as to urge attached sensor assembly **130** towards a home or starting position adjacent left beam support **120** (depicted as **320** in FIG. 3).

Translation of sensor assembly **130** laterally along the bearing track **170** could also be carried out mechanically. As an example, a second cable connected at one end to motorized wind/unwind means and at the other end to the sensor assembly could pull the sensor assembly towards the right beam support **125**. Alternatively, a lead screw interfacing with the sensor assembly and driven by a servo motor could cause the sensor assembly **130** to translate along the bearing track **170**.

The device of the present invention can be used to measure the profile of a number of different types of surfaces, including countertops, walls, floors, ceilings, structured materials such as abrasives, steel plates, micro-structured surfaces and the like. For example, the profilometer can be used to determine the relative planarity of a countertop substrate prior to laminating the final covering to the surface. The profilometer can also be used to determine a wear characteristic of an abrasive surface to enable the user to know when the abrasive is no longer effective. In another example, a profilometer of the present invention having an elongated beam can be used to determine the overall profile of a large area floor such as found in warehouses, garages and the like.

The present invention has been described with reference to several embodiments thereof. The foregoing description of specific embodiments and examples has been provided to illustrate the invention, and is not intended to be limiting of the scope of the invention. It will be apparent to those skilled in the art

that many changes can be made to the described embodiments without departing from the spirit and scope of the invention.

What is claimed is:

1. A device for measuring the profile of a surface, the device comprising:

(a) a beam;

(b) at least one beam support mounted on the beam;

(c) a sensor assembly slidably connected to the beam and adapted for measuring distance to the surface; and

(d) a transducer assembly adapted for measuring a position of said sensor assembly along said beam.

2. The device of claim 1, wherein the sensor assembly comprises a laser triangulation sensor.

3. The device of claim 1, wherein the transducer assembly comprises a cable attached to the sensor array.

4. The device of claim 1, further comprising a leveling apparatus.

5. The device of claim 1, further comprising a motor for moving the sensory assembly along the beam.

6. The device of claim 1, further comprising a carriage knob for manually positioning the sensor assembly on the beam.

7. The device of claim 1, further comprising a data acquisition apparatus connected to the sensor assembly and the transducer assembly.

8. The device of claim 1, wherein the beam support has an adjustable length.

9. The device of claim 1, wherein the surface is a floor.

10. A method for measuring the profile of a surface, the method comprising the steps of:

(a) placing a sensor assembly at a first position along a beam;

(b) measuring the distance from the sensor assembly to the surface at the first position;

(c) measuring the lateral position of the sensor assembly on the beam at the first position;

(d) placing the sensory assembly at a second position along a beam;

(e) measuring the distance from the sensor assembly to the surface at the second position; and

(f) measuring the lateral position of the sensor assembly on the beam at the second position.

11. The method of claim 10, further comprising the step of (g) transmitting measurement information to a data acquisition device.

12. The method of claim 11, further comprising the step of (h) creating a two dimensional profile of the surface.

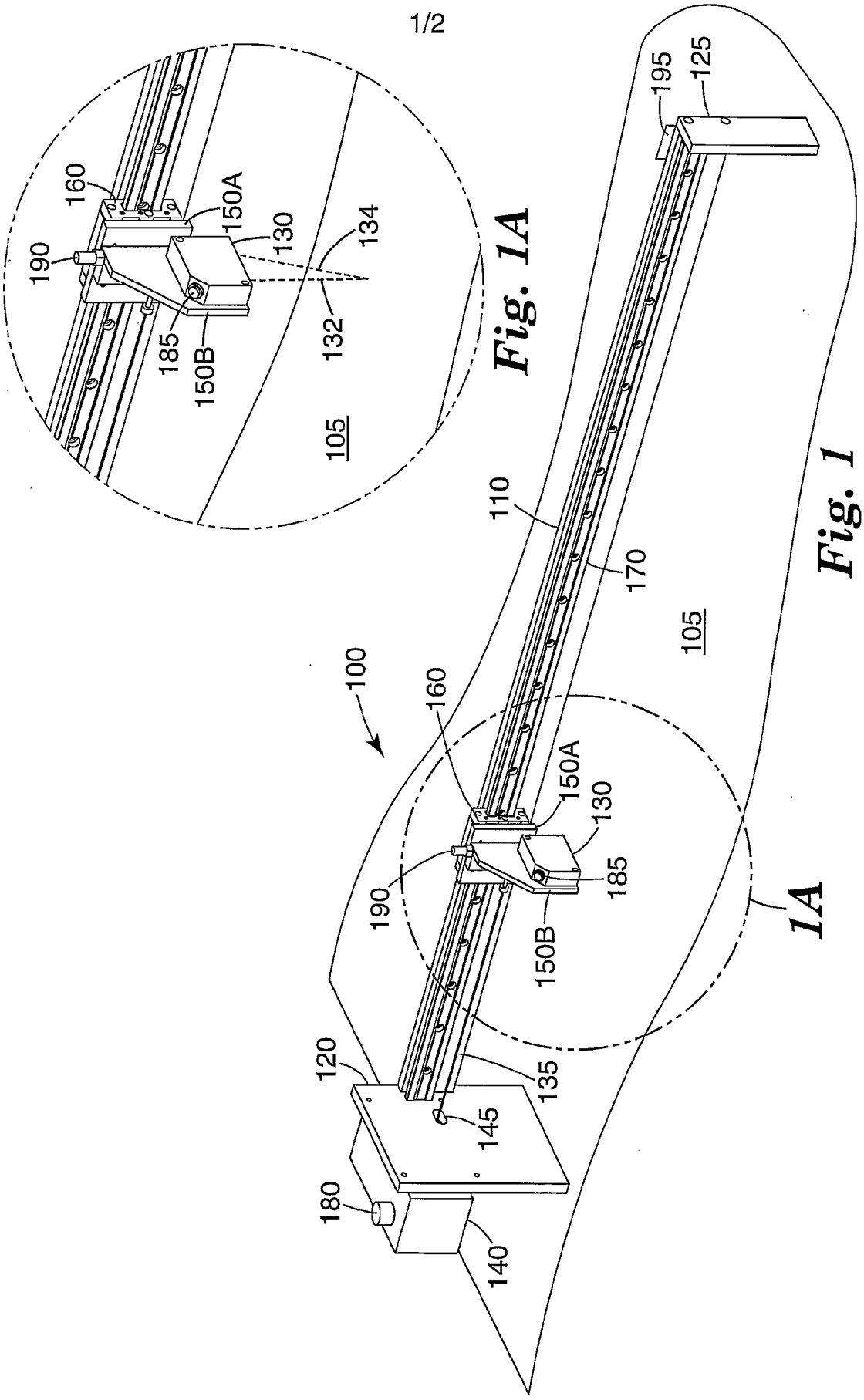
195
125
160
150A
130
134
190
185
150B
132
105
110
170
105
100
160
150A
130
190
185
150B
120
135
145
180
140
1A

Fig. 1A

Fig. 1

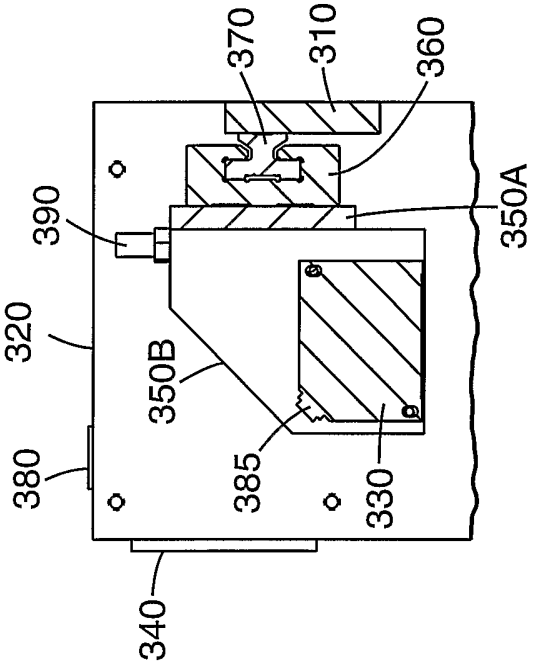

Fig. 3

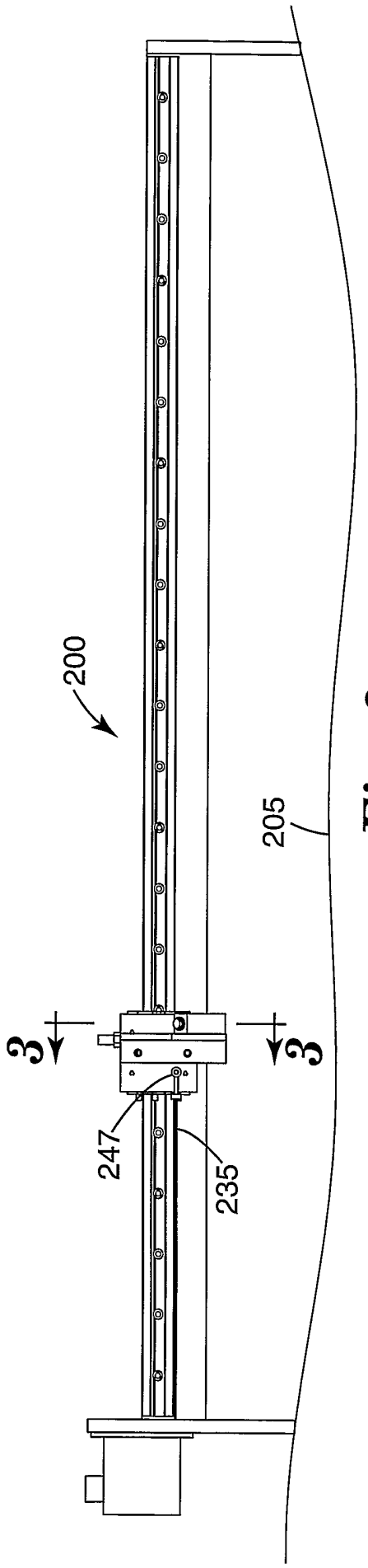

Fig. 2

INTERNATIONAL SEARCH REPORT

International Application No
PCT/US2004/043011

A. CLASSIFICATION OF SUBJECT MATTER
IPC 7 G01B11/30

According to International Patent Classification (IPC) or to both national classification and IPC

B. FIELDS SEARCHED

Minimum documentation searched (classification system followed by classification symbols)
IPC 7 G01B

Documentation searched other than minimum documentation to the extent that such documents are included in the fields searched

Electronic data base consulted during the international search (name of data base and, where practical, search terms used)

EPO-Internal, WPI Data, PAJ

C. DOCUMENTS CONSIDERED TO BE RELEVANT

Category °	Citation of document, with indication, where appropriate, of the relevant passages	Relevant to claim No.
X	US 5 617 645 A (WICK ET AL) 8 April 1997 (1997-04-08) abstract column 1, line 7 - column 4, line 16 figures 1a,1b,1c	1-12
X	US 5 798 925 A (POLING ET AL) 25 August 1998 (1998-08-25) abstract column 4, line 14 - column 6, line 39 figure 2	1-12
X	US 6 497 047 B1 (MIYAGAWA CHIHIRO ET AL) 24 December 2002 (2002-12-24) abstract column 2, line 51 - column 6, line 50 figures 1,2	1-12

-/--

[X] Further documents are listed in the continuation of box C.

[X] Patent family members are listed in annex.

° Special categories of cited documents :

"A" document defining the general state of the art which is not considered to be of particular relevance

"E" earlier document but published on or after the international filing date

"L" document which may throw doubts on priority claim(s) or which is cited to establish the publication date of another citation or other special reason (as specified)

"O" document referring to an oral disclosure, use, exhibition or other means

"P" document published prior to the international filing date but later than the priority date claimed

"T" later document published after the international filing date or priority date and not in conflict with the application but cited to understand the principle or theory underlying the invention

"X" document of particular relevance; the claimed invention cannot be considered novel or cannot be considered to involve an inventive step when the document is taken alone

"Y" document of particular relevance; the claimed invention cannot be considered to involve an inventive step when the document is combined with one or more other such documents, such combination being obvious to a person skilled in the art.

"&" document member of the same patent family

Date of the actual completion of the international search	Date of mailing of the international search report
7 April 2005	19/04/2005

Name and mailing address of the ISA	Authorized officer
European Patent Office, P.B. 5818 Patentlaan 2 NL - 2280 HV Rijswijk Tel. (+31-70) 340-2040, Tx. 31 651 epo nl, Fax: (+31-70) 340-3016	Kokkonen, J

Form PCT/ISA/210 (second sheet) (January 2004)

INTERNATIONAL SEARCH REPORT

International Application No
PCT/US2004/043011

C.(Continuation) DOCUMENTS CONSIDERED TO BE RELEVANT

Category °	Citation of document, with indication, where appropriate, of the relevant passages	Relevant to claim No.
X	US 6 169 290 B1 (ROSBERG LARS TOMAS RAGNAR ET AL) 2 January 2001 (2001-01-02) column 5, line 34 - column 11, line 20 figures 1,2,6,9	1-12

Form PCT/ISA/210 (continuation of second sheet) (January 2004)

INTERNATIONAL SEARCH REPORT

Information on patent family members

International Application No
PCT/US2004/043011

Patent document cited in search report	Publication date	Patent family member(s)	Publication date
US 5617645 A	08-04-1997	NONE	
US 5798925 A	25-08-1998	EP 0743505 A2	20-11-1996
		JP 8313223 A	29-11-1996
US 6497047 B1	24-12-2002	JP 2000258153 A	22-09-2000
US 6169290 B1	02-01-2001	SE 510988 C2	19-07-1999
		AT 290684 T	15-03-2005
		EP 1007904 A1	14-06-2000
		SE 9702945 A	23-02-1999
		WO 9910708 A1	04-03-1999