A. L. WARD.

COLLAPSIBLE CONTAINER.

APPLICATION FILED MAR. 14, 1916.

1,205,418.

Patented Nov. 21, 1916.

2 SHEETS—SHEET 1.

Fig. 1.

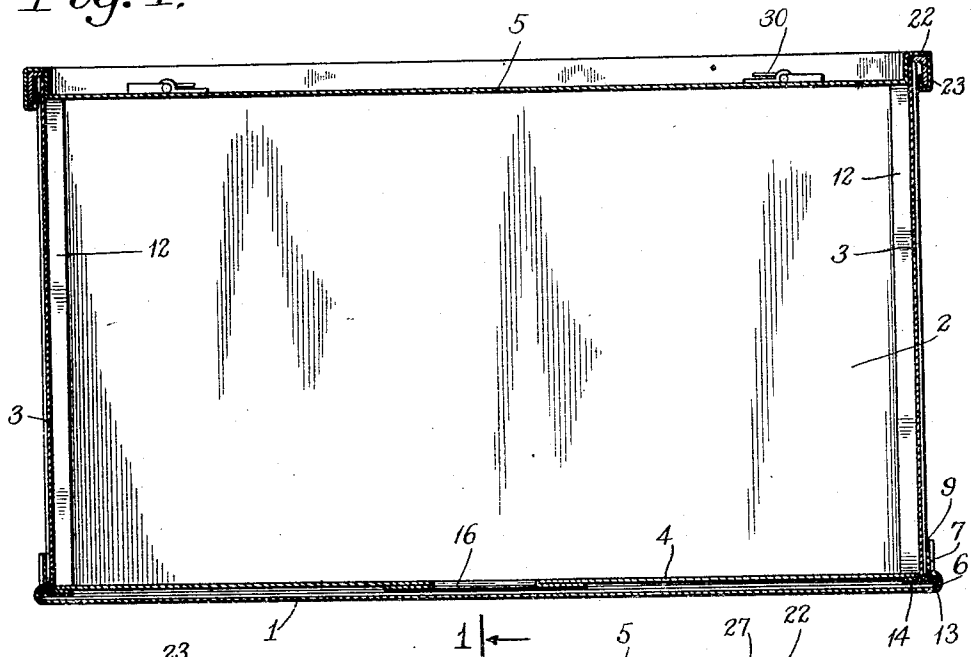

Fig. 2.

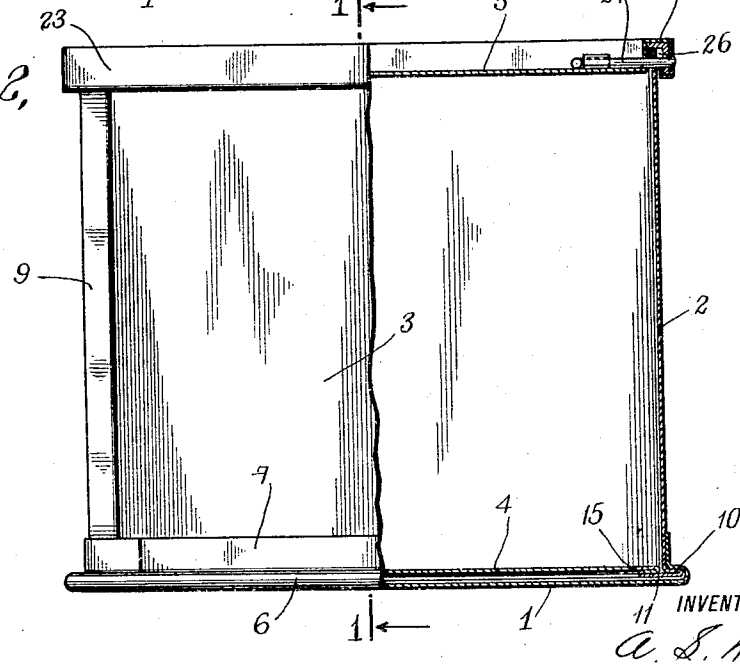

INVENTOR

A. L. Ward

BY

J. C. Edwards

ATTORNEY

THE NORRIS PETERS CO., PHOTO-LITHO., WASHINGTON, D. C.

A. L. WARD.

COLLAPSIBLE CONTAINER.

APPLICATION FILED MAR. 14, 1916.

1,205,418.

Patented Nov. 21, 1916.

2 SHEETS—SHEET 2.

Fig. 3,

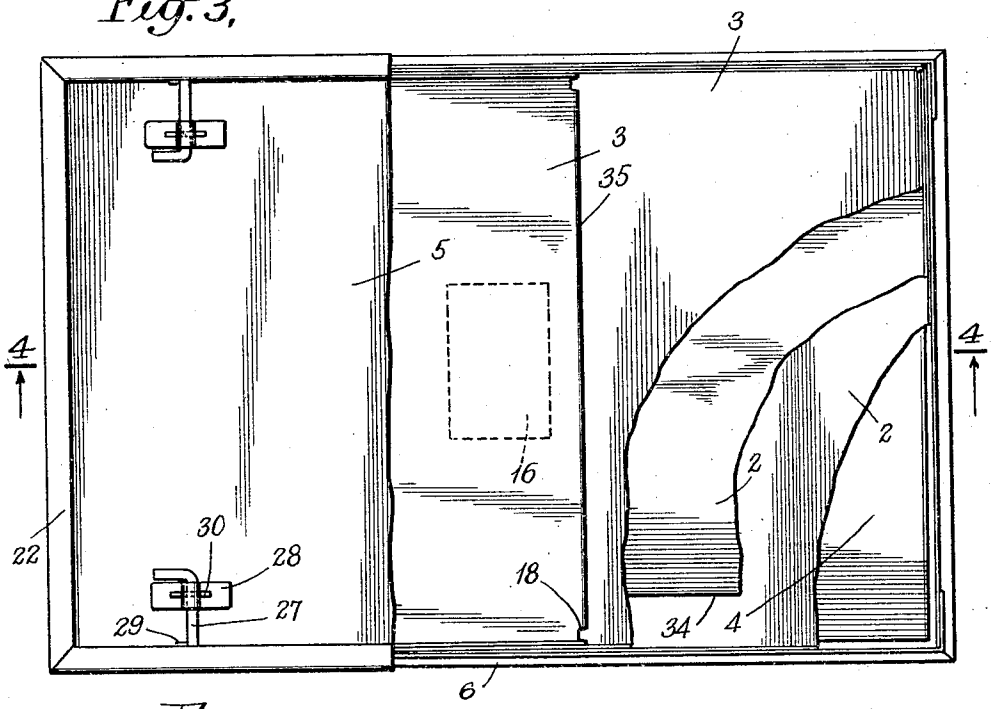

Fig. 4,

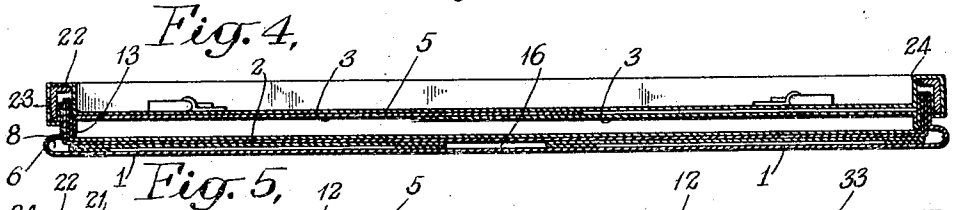

Fig. 5,

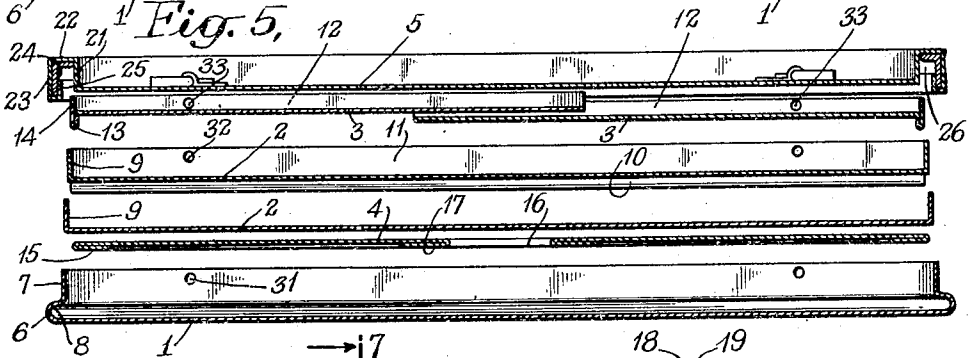

Fig. 6

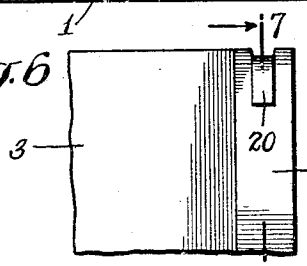

Fig. 7,

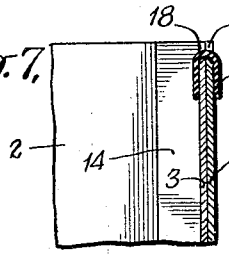

INVENTOR

A. L. Ward

BY

J. O. Edmunds

ATTORNEY

THE NORRIS PETERS CO., PHOTO-LITHO., WASHINGTON, D. C.

UNITED STATES PATENT OFFICE.

ALEXANDER L. WARD, OF NEW YORK, N. Y.

COLLAPSIBLE CONTAINER.

1,205,418. Specification of Letters Patent. Patented Nov. 21, 1916.

Application filed March 14, 1916. Serial No. 84,025.

To all whom it may concern:

Be it known that I, ALEXANDER L. WARD, a citizen of the United States, residing in the city, county, and State of New York, have invented certain new and useful Improvements in Collapsible Containers, of which the following is a specification.

My invention relates to collapsible or knock-down containers or boxes formed of sheet-metal sections adapted to be used for packing and shipping various sorts of goods.

One of the objects of my invention is to provide a container of the character described, so arranged and formed that its parts can be quickly and conveniently assembled, or knocked down, and compactly nested together for transit; the parts are so constructed as to form an exceedingly rigid container when assembled, the arrangement being such that the method of assembling the parts is simple and efficient. The cover section is arranged to effectively sustain the side and end sections when the container is set up, locking devices being provided in connection with the cover for coöperation with the sides and ends when the container is set up and for coöperation with the bottom section and other parts nested thereon when the device is knocked down or collapsed.

Other objects of my invention reside in the improved construction of parts and combinations of elements which will be more particularly described hereinafter and claimed in the accompanying claims.

In order that a clearer understanding of my invention may be had, attention is hereby directed to the accompanying drawings forming part of this application and illustrating certain embodiments thereof.

In the drawings Figure 1 represents a vertical longitudinal section taken on line 1—1 of Fig. 2, Fig. 2 represents an end view of the container assembled, certain parts being shown in section, Fig. 3 represents a top plan view of the container in knocked-down or collapsed condition, certain parts being broken away to show the underlying parts, Fig. 4 is a vertical longitudinal section taken on line 4—4 of Fig. 3, Fig. 5 is a sectional view similar to Fig. 4, showing the various parts in separated position preparatory to nesting the same, Fig. 6 is an enlarged detail elevation of one of the corners of the container and Fig. 7 is a vertical section taken on line 7—7 of Fig. 6.

Referring to the drawings, the box or container comprises a bottom section 1, side sections 2, 2, end sections 3, 3, a false bottom section 4 and a top section 5. Bottom section 1 is formed of a sheet of metal having its edges flanged upwardly and inwardly, as shown at 6, and thence upwardly to form vertical flanges 7. The arched flanges 6 provide recesses 8 beneath the vertical flanges 7, for coaction with base flanges on the side and end sections, as will be described. The arched or beaded edges 6 also add to the strength of the construction. The side sections 2, 2 are similarly formed, each of a sheet of metal having vertical side flanges 9, 9. Each side section also has a base flange which is bent both outwardly and inwardly, so as to give the side section, at its bottom edge, the section of an I-beam. This is preferably accomplished, as is shown in Fig. 2, by flanging each side section 2 outwardly at the bottom, as is shown at 10, and then bending the metal back on itself to form a return flange 11 which extends under and in contact with the outwardly extending flange 10 and continues inwardly to form an inwardly directed flange, which may extend inwardly from the web of side section 2 approximately as far as the vertical edge flanges 9. In assembling the device, each side section 2 is positioned within one of the longitudinal vertical flanges 7 of the bottom section and closely contacting the same with the outwardly directed horizontal bottom flange 10 of the side section inserted within the recess 8 beneath the vertical flange 7 of the bottom section. It will be observed that the outwardly extending flange 10 of each side section is of a double thickness of metal, because of the return bend in the same, this construction affording considerable strength and rigidity at the flange 10.

The end sections 3, 3 are each formed in the same manner as the side sections, with vertical side flanges 12, 12, and with bottom flanges each having an outwardly extending portion 13 and an inwardly extending portion 14, the outwardly extending portion 13 being formed of two thicknesses of metal, by bending the metal first outwardly and then inwardly again in the same manner as in the case of the side sections. In assembling the container, after the side sections

have been mounted upon the bottom section as described, the end sections are slipped into position between the side sections with the bottom inwardly directed flange 14 of each end section resting upon the bottom inwardly directed flanges 11 of the side sections, and the outwardly directed bottom flanges 13 of the end sections extending into the recesses 8 beneath the vertical flanges 7 at the ends of the bottom section. With this construction the vertical edge flanges 12 of the end sections rest against the inner surfaces of the side sections, adjacent to the corners, and the vertical edge flanges 9 of the side sections rest against the outer surfaces of the end sections adjacent the corners. Thus the container is formed with a double thickness of metal adjacent each corner at each side of the angle thereof, this greatly adding to the rigidity of the structure.

After the side and end sections have been mounted in position, the false bottom 4 is dropped into position within the side and end sections, the false bottom resting on the inwardly directed bottom flanges of the side and end sections and snugly fitting between the web portions of the side and end sections. The false bottom is preferably formed of a sheet of metal having its four edges bent back and pressed against the under side of the sheet to form stiffening edge flanges 15. The false bottom is also provided with means for lifting the same to remove it after it has been slipped into position, this preferably comprising an opening centrally formed in the sheet, as indicated at 16, the metal preferably being slit to form the opening and pressed back on the under side to form stiffening flanges 17 about the opening. When the false bottom is in position, it prevents the side and end sections from moving inwardly and forms a strut member at the bottom to stiffen the container in the horizontal plane of its bottom section, this being important when the container is formed of thin sheets of metal.

The top edges of the side and end sections, which are in the same plane, are conveniently secured together by clips. To this end, the upper edges of the end sections may be slightly notched adjacent the corners, as shown at 18, and the end flanges 9 of the side sections correspondingly notched on their upper edges, as shown at 19 in Fig. 7, notches 18 and 19 being in alinement at the four corners. U-shaped clips 20 are then slipped into position over the end sections and the end flanges 9 of the side sections, with the upper portions of the clips within the alined notches 18, 19, as shown in Figs. 6 and 7.

The cover section comprises a stiff member adapted to seat upon the upper edges of the side and end sections, hold the same in position and act as a stiffening or strut member at the top of the structure. The cover member is preferably formed of a single sheet of metal having its edges flanged preferably in the manner shown in the drawings. As there indicated, the cover section is flanged upwardly, as is shown at 21, adjacent each edge, thence horizontally outwardly, as is shown at 22, and thence downwardly, as shown at 23. A reinforcing member 24 is mounted within the inverted U-shaped flange thus formed, the lower edge of each flange 23 being bent around the lower edge of the reinforcing member, as shown at 25. The reinforcing member is preferably an angle iron, as illustrated, with the vertical arm thereof on the outside. Whatever the form of the reinforcing member 24 a space 26 is left between flanges 21 and 25 sufficient to accommodate the flanges of the various parts which are inserted therein when the same are nested together in collapsed or knocked-down condition, as will be later described.

The top member 5 is provided with locking devices which preferably comprise pins 27 slidably mounted in straps 28 on the top of the cover member 5. When the cover is mounted in position upon the container the upper edges of the side and end sections are received within the recess 26 formed about the under side of the cover, adjacent its edges as described. A plurality of small holes in the flanges 21 and 23, and the reinforcing member 24 of the cover, and the upper edges of the side sections are then in alinement and pins 27 are pressed into the same as is indicated in Fig. 2. Pins 27 may be provided with small pins 29 inserted in the same, or a shoulder otherwise produced, to prevent withdrawal of pins 27 from their bearings in straps 28. The bearings in straps 28 may also be provided with small horizontal openings, and pins 27 provided with openings therethrough which register with the openings in the bearings when pins 27 are in locked position, as shown in Figs. 2 and 3. A sealing means 30 may then be inserted through the alined openings in each pin and its bearing.

The container may be taken apart very simply, by reversing the operations described. To nest the parts in collapsed position, the false bearing member 4 is first laid within the vertical flanges 7 of the bottom member. This does not quite fill the space between the four flanges 7 for the reason that the false bottom is adapted to lie within the side and end sections when the same are mounted in the assembled box. One of the side sections is then slipped into position upon the false bottom, with the outwardly extending bottom flange 10 of the side section extending downwardly alongside one of the longitudinal flanges 7 of the

bottom section, flange 10 resting between the longitudinal flange 7 and the adjacent longitudinal edge of the false bottom section. The other side section 2 is then slipped into position with its bottom outwardly extending flange 10 inserted between the opposite flange 7 of the bottom section and the adjacent edge of the false bottom. The vertical edge flanges 9 of the side section last referred to will be received within the edge flanges 9 of the underlying side section. This is for the reason that the container is not made exactly rectangular, its divergence from the rectangular being so slight as not to be perceptible to the eye in most cases. One of the longitudinal edges of each side section is longer than the opposite longitudinal edge by an amount which may be equal to twice the thickness of the metal employed, and one of the end edges is correspondingly longer than the opposite end edge. The bottom and false bottom, the cover section and the two end sections are correspondingly formed. Accordingly the side section having a bottom length greater than the bottom length of the other side section is placed immediately above the false bottom, in packing, with the other side section above that, the upstanding side flanges being close together, as is indicated in Fig. 4.

The end section 3 having the longer base is then positioned upon the uppermost side section, with its outwardly extending bottom flange 13 resting upon the uppermost side section adjacent to the upstanding flange of the latter at the longer end of the nested parts, its upstanding edge flanges 12 resting against the inner surfaces of the longitudinal flanges 11 of the side members. The other end section is then slipped into position similarly at the other end of the nested parts, with its outwardly extending bottom flange 13 resting upon the surfaces of the side sections adjacent to the upstanding flanges at that end, the side flanges 12 of the uppermost end section fitting within the flanges 12 of the other end section.

The longitudinal flanges 7 of the bottom section are each provided with a pair of openings 31, and the longitudinal flanges 11 of the side sections are each provided with a pair of similar openings 32. The side flanges 12 of the end sections are each provided with a single opening 33. When the parts are nested in the manner described, an opening 31, 32 and 33 at each end will be in alinement. When the cover section 5 is now mounted in position upon the nested parts, the openings previously referred to through the side flanges of the cover will be in alinement with the openings 31, 32 and 33, and pins 27 may be slipped through the same to lock the parts in their collapsed condition. When so mounted, the upstanding flanges of the nested parts extend into the spaces 26 of the cover section, as is indicated in Fig. 4.

It will be noted in Fig. 3 that the side sections illustrated are of somewhat less height than the width of the bottom section and that the end sections are of less height than the length of the bottom section, the top edge of one side section being indicated at 34 and of the upper end section being indicated at 35, referring to the illustration of the parts in their nested position in Fig. 3. It is obvious that to nest the parts in the manner described, it is only necessary that the height of the container be no greater than the space between the flanges within which the upper and lower edges of the side members must fit. Also, it is obvious that the container may be of any desired rectangular shape, or an approximate square.

When the container is assembled, it presents an exceedingly rigid construction, with a rigid top and bottom in which the false bottom adds to the rigidity, the corners are formed of overlapping metal, and the flanges 7 of the bottom constitute a reinforcing strap running continuously around the container adjacent the bottom thereof. The formation of the flanges of the bottom and the top sections adds to the stiffness of the structure as does also the fact that the side and end sections are given an I-beam formation at their bottoms. The outwardly extending bottom flanges of the side and end sections extending into the recesses 8 of the bottom prevent upward movement of the sides and ends, while the false bottom section prevents any inward movement of the sides or ends at any points in the bottom lengths of the same. The single locking means described serves to lock the container both in assembled and collapsed condition. In the construction described, it should also be noted that the vertical flanges 7 of the bottom section are lapped or otherwise secured together at the corners, to form a continuous band around the container; also that flanges 7 stiffen the arched flanges 6, and prevent the upper edges of the latter being bent out of place. Also, in assembling the side and end sections, the inwardly directed bottom flanges 14 of the end sections rest on the inwardly directed flanges 11 of the side sections, the side flanges 9 of the side sections terminating at their bottoms a slight distance above bottom flanges 11, to permit flanges 13 of the end sections passing between flanges 9 and 11, into recesses 8.

The locking pins 27 are preferably placed quite close to the corners of the cover, so that these pins will be protected against injury as much as possible by the adjacent end and side flanges 22. For clearness of illustration, these pins have been shown in the drawings some distance from the corners.

In regard to nesting the parts when collapsed, it is of course obvious that no nesting of one side section within the flanges of the other is necessary when the height of a side section is less than half the width of the container between opposite flanges 7, and that no nesting of one end section within the flanges of the other is necessary when the height of an end section is less than half the length of the container between opposite end flanges 7. In the form illustrated, however, the nested sections overlap. To aid in assembling and also in packing the parts, it is convenient to mark the figures 1, 2, 3, 4 or the like, on the bottom and the false bottom adjacent the four edges, and mark the side and end sections correspondingly, so that side section marked 1, for example, will be set up at the side of the bottom correspondingly marked, these markings also indicating the order in which the parts are laid down for packing.

It should be understood that my invention is not strictly limited to the exact details of construction described, but is as broad as is indicated by the accompanying claims.

Having described my invention, what I claim as new therein and desire to secure by Letters Patent of the United States is:—

1. In a collapsible container, the combination of separable bottom, false bottom, side and end sections, said bottom section having upwardly extending flanges inwardly from the edges, with recesses beneath the same, and said side and end sections having outwardly directed bottom flanges adapted to extend into said recesses and inwardly directed bottom flanges, said false bottom section being adapted to rest snugly within the side and end sections upon said inwardly directed bottom flanges, with the side and end sections contacting against said upwardly extending flanges of the bottom section, substantially as set forth.

2. In a collapsible container, the combination of separable bottom, false bottom, side and end sections, said bottom section having marginal flanges, and said side and end sections being adapted to be received within said flanges and having inwardly directed bottom flanges resting on the bottom section, and said false bottom being adapted to rest snugly within the side and end sections upon said inwardly directed flanges, said false bottom section having provisions for lifting the same from its operative position, substantially as set forth.

3. In a collapsible container, the combination of separable bottom, side end and top sections, the bottom section having upwardly extending flanges inwardly from the edges with recesses beneath the same, and said side and end sections having bottom flanges extending both inwardly and outwardly, adapted to rest on the bottom section with the outwardly extending flanges engaged in said recesses, the side and end sections also having vertical edge flanges directed inwardly therefrom, the vertical flanges of the side sections contacting the outer surfaces of the end sections, to form reinforced corner portions; and said top section having downwardly extending marginal flanges with recesses extending on the inner sides of said flanges, said recesses being adapted to embrace the upper edges of the side and end sections when mounted in position, substantially as set forth.

4. In a collapsible container, the combination of separable bottom, side and end sections, the bottom section having its edges arched upwardly and inwardly, and thence extended upwardly to form vertical flanges, the side and end sections having outwardly extending bottom flanges adapted to extend into the arched portions with the webs of the said sections contacting the said vertical flanges, and means for holding the side and end sections in position adjacent the tops thereof, the vertical flanges of the bottom section being joined together at the corners and constituting a reinforcing strap running continuously around the container, substantially as set forth.

5. In a collapsible container, a bottom section formed of a sheet of metal having its edges arched upwardly and inwardly, and thence extended upwardly to form vertical flanges, said flanges being secured together at the corners and thus constituting a continuous strap around the container, and said arched portions forming recesses beneath said flanges, adapted to receive bottom flanges of upright members of the container, substantially as set forth.

6. In a collapsible container, the combination of a bottom member having flanges extending vertically upwardly, inwardly from its edges, with horizontal recesses beneath the same, and vertical members having bottom flanges extending outwardly, adapted to be received in said recesses, and bottom flanges extending inwardly, adapted to rest on said bottom member, said vertical members also having vertical edge flanges bent inwardly of the same, adapted to contact surfaces of adjacent sections at the corners of the container, substantially as set forth.

7. In a collapsible container, a top section formed of a sheet of metal having its edges flanged upwardly, outwardly, downwardly, and thence upwardly again, with the upwardly extending portions separated, and a rigid reinforcing member of rectangular section secured between the outward, downward and final upward bends of each flange, substantially as set forth.

8. In a collapsible container, the combination of side and end sections having vertical

edge flanges directed inwardly, adapted to engage at the corners, with a flange of one section contacting the outer surface of an adjacent section, means for securing the sections together at their upper corners, a top section having flanges of inverted U-shape at the edges, adapted to seat over the top edges of the side and end sections, and locking pins on the top of the top section, the arms of some of said U-shaped flanges and the upper portions of the sections embraced thereby having openings in alinement with said pins, when said top section is mounted in position, substantially as set forth.

9. In a collapsible container, the combination of a bottom member having an upstanding marginal flange, having openings therethrough, vertical members having openings therethrough adjacent their top edges, and having flanges having openings therethrough, and a top member having a marginal flange with openings therethrough, all of said openings being adapted to receive locking pins, said top member being adapted to fit upon the top edges of the vertical members, with the openings in the top member flange and the top openings in the vertical members in alinement; said top member also being adapted to fit upon the marginal flange of the bottom member, with said vertical members laid therein, in such manner that openings in the vertical member flanges, bottom member flange, and top member flange, are in alinement, substantially as set forth.

10. In a collapsible container, the combination of separable flanged bottom, top, side and end members, and a locking pin carried by the top member, said members being adapted to be assembled in interlocked relation with said pin extended through registering openings in the top member flange and a side member, said side and end members also being adapted to be packed within the flanges of the bottom member, with the top member over the same, and said locking pin extended through registering openings in flanges of the top, bottom, a side and an end member, substantially as set forth.

11. In a collapsible container, the combination of a bottom member having an overhanging marginal flange, side members having bottom flanges extending both outwardly and inwardly, and a false bottom, said parts being adapted to be assembled with the false bottom on the inwardly directed flanges of the side members, and the outwardly directed flanges of the latter inserted in the overhanging bottom member flange, the parts also being adapted to be packed with the false bottom on the bottom member, and the side members, in overlapped relation, upon that, with the outwardly directed flange of one side member inserted between an edge of the false bottom and one side flange of the bottom member, and the outwardly directed flange of the other side member inserted between the opposite edge of the false bottom and the side flange of the bottom member adjacent thereto, substantially as set forth.

This specification signed and witnessed this 11th day of March, 1916.

ALEXANDER L. WARD.

Witnesses:
DYER SMITH,
I. MCINTOSH.

Copies of this patent may be obtained for five cents each, by addressing the "Commissioner of Patents, Washington, D C."