April 21, 1953 F. A. BLUM 2,635,421

PULSE JET CONVERTIBLE TO RAM JET-PROPULSION MEANS

Filed Oct. 24, 1949 2 SHEETS—SHEET 1

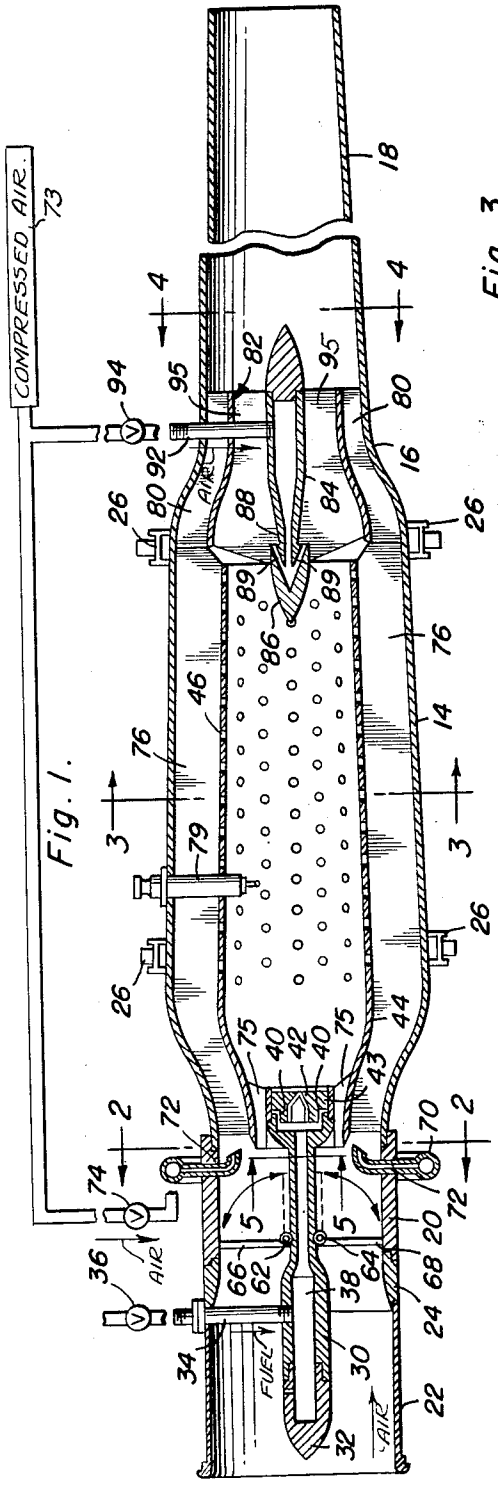

Fig. 1.

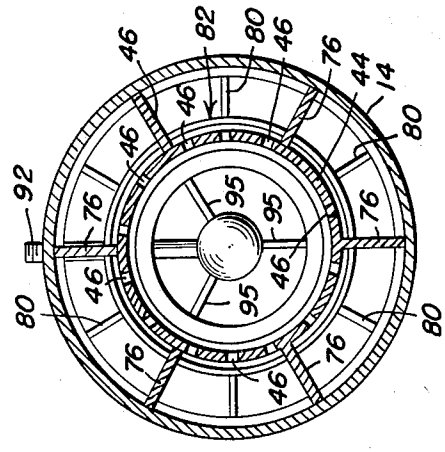

Fig. 3.

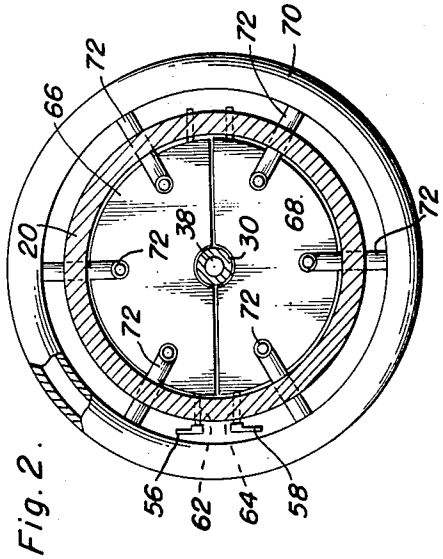

Fig. 2.

Inventor

Felix A. Blum

By Clarence A. O'Brien and Harvey B. Jacobson

Attorneys

April 21, 1953 F. A. BLUM 2,635,421

PULSE JET CONVERTIBLE TO RAM JET-PROPULSION MEANS

Filed Oct. 24, 1949 2 SHEETS--SHEET 2

Fig. 4.

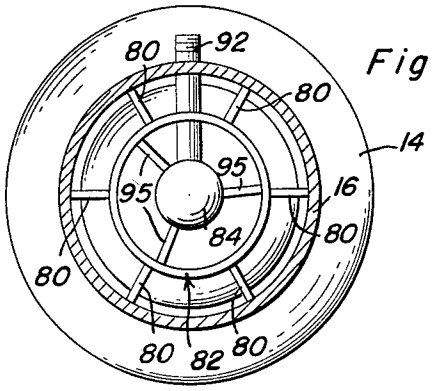

Fig. 5.

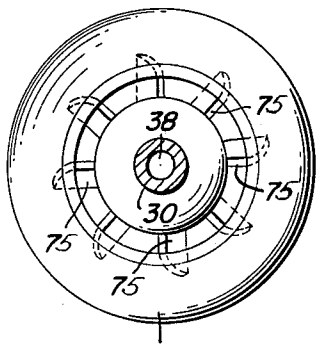

Fig. 6.

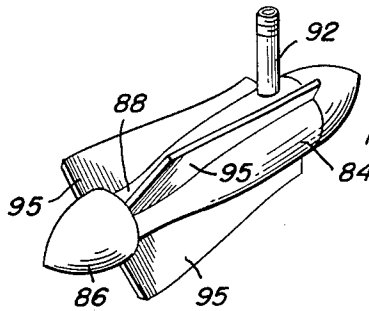

Fig. 9.

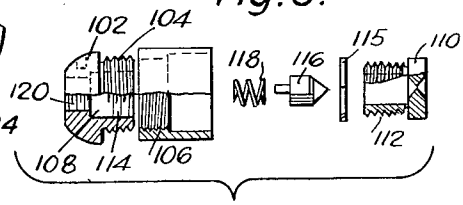

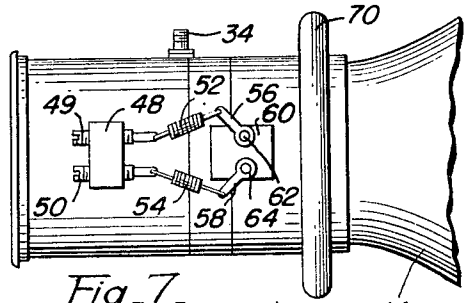

Fig. 7.

Fig. 8.

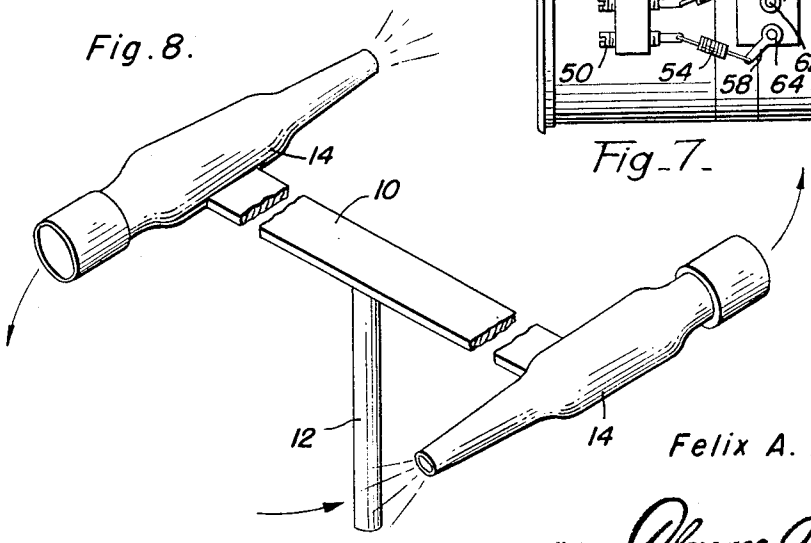

Inventor

Felix A. Blum

By Clarence A. O'Brien and Harvey B. Jacobson

Attorneys

Patented Apr. 21, 1953 2,635,421

UNITED STATES PATENT OFFICE

2,635,421

PULSE JET CONVERTIBLE TO RAM JET-PROPULSION MEANS

Felix A. Blum, Beverly Hills, Calif.

Application October 24, 1949, Serial No. 123,126

1 Claim. (Cl. 60—35.6)

1

This invention relates to novel and useful improvements in engines.

An object of this invention is to provide a single unit which may be operated as a resonant jet and a ram jet by manipulation of valves causing control of air flow into various positions of an appropriately contoured housing having the necessary fuel-ignition elements disposed therein.

Another object of this invention is to operate under the resonant jet theory of operation, a device, without forward movement of the jet with respect to still air.

Another object of this invention is to provide a device of the character to be described which may be used in many environments, as in aircraft propulsion or as a heater in that a tremendous amount of heat is dissipated from the device in its operation.

Ancillary objects and features of novelty will become apparent to those skilled in the art in following the description of the illustrated form of the invention.

In the drawings:

Figure 1 is a longitudinal sectional view of one form of the invention;

Figure 2 is a transverse view taken substantially on the line 2—2 of Figure 1 and in the direction of the arrows;

Figure 3 is a transverse view taken on the line 3—3 of Figure 1;

Figure 4 is a transverse view taken on the line 4—4 of Figure 1;

Figure 5 is a sectional view taken substantially on the line 5—5 of Figure 1;

Figure 6 is a perspective view of the means of introducing air under pressure into the rear part of the burner plate and into the booster venturi;

Figure 7 is a fragmentary elevational view of a part of a valve control mechanism disposed at the front of the device;

Figure 8 is a perspective view shown largely schematically of a suggested use of the invention; and

Figure 9 is an exploded detail view of the fuel manifold injector assembly with parts being shown in section for greater clarity.

The present invention relates to engines of the class which do not employ the piston reciprocation principle of operation. The field of utility of the invention is left within the prerogative of the manufacturer and purchaser. As suggested uses, the invention may be used for propulsion of craft, whatever type of craft is deemed adaptable for use in connection therewith. A second suggestion is the employment of the invention on a rotor 10 (Fig. 8) which is carried by a post or support 12 whereby the propulsive force of a pair of the units of the invention are disposed at the ends of the rotor so as to constantly cause the rotor to operate, the object or purpose being to dissipate heat in a region, as in a grove of trees during frost season, in order to act in the nature of a heater.

2

Obviously, the main purpose of the invention will be for supplying thrust to a land, sea or air craft.

Referring to Fig. 1, housing 14 with a venturi 16 forming a part of the tail cone 18 is supplied with an open front end. This open front end has a ring 20 secured thereto by any suitable means and an extension or inlet cone 22 attached thereto. The extension 22 and the ring 20 together with the intermediate ring 24 are of substantially similar diameters, as is the inlet front end of the housing 14. Then, progressing rearwardly toward the tail cone 18, the housing 14 is enlarged, tapering slightly beyond the original enlargement until the venturi 16 is reached. Mounting trunnions 26 are secured to the housing 14 in order to illustrate that the housing may be attached by any conventional means to a relatively stationary element, as a fuselage of an aircraft, a wing of an aircraft, or any other element.

Starting from the front end of the housing the elements will be described progressively. There is a means for introducing fuel. A tube 30 is disposed axially with respect to the housing 14 and has a cap 32 at the front end thereof. A fuel inlet conduit 34 is secured in an opening communicating with the bore of the tube 30 and has a valve 36 operatively connected therewith. This valve is shown schematically to illustrate that any conventional valve system or assembly may be employed. A fuel pump will probably be required but this being a conventional element it is not shown.

As the fuel passes into the bore 38 of the tube it passes through the curved passages 40 which are shown in Figure 1 and ultimately into the converging passages 42 for the discharge of the raw fuel allowing it to be diffused by the convergency of the passages 42. These fuel passages are disposed in a block 43 in the front open end of the burner plate 44.

With particular reference to Figure 9, it will be seen that the passages 40 and 42 referred to in the preceding paragraph are formed by the various elements of the fuel manifold in-

jector assembly. This assembly includes a fuel injector accumulator 102 which is threaded at 104 for engagement within a hood 106. The fuel injector accumulator 102 is provided with a passageway 108 therein in alignment with the bore 38. Received in the hood 106, a nozzle 110 having a threaded outer cylindrical surface 112 is threadedly engaged with the internal threads 114 in the fuel injector accumulator. A gasket 116 is provided so as to prevent leakage of fuel and a metering needle 118 is received within the nozzle 110. A spring 118 biases the needle 116 and the end of the tube 30 which is threadedly received in engagement with the internal threads 120 in the fuel injector accumulator 102. In such manner, the fuel may be properly metered.

The burner plate is substantially cylindrical in configuration having a neck down portion at the front thereof wherein the block is disposed. The plate also has a number of apertures 46 therein for admixture of air and fuel.

Referring to Figure 7, a valve operating mechanism is illustrated. It consists of a block 48 fixed stationary with the front end of the housing and having a pair of manually operative adjusting screws 49 and 50 respectively carried thereby. Springs 52 and 54 are secured to the screws 49 and 50 and also to cranks 56 and 58 which pass through a mounting block 60 carried by the front end of the housing 14. The cranks include shafts 62 and 64, respectively, each shaft having a valve plate 66 and 68 secured thereto, one valve plate being secured to one shaft.

An activator manifold ring 70 is disposed in concentric relationship with the front part of the housing 14 and has a number of nozzles 72 passed through suitable openings in the ring 20, directed rearwardly as disclosed in Figure 1. A suitable air inlet control valve 74 is operatively connected with the manifold ring 70 for the introduction of air under pressure into the housing. The supply of air is provided through the valve 74 from any suitable source, such as the compressed air bottle 73.

Baffles 75 are disposed between the burner plate 44 and the outside surface of the block 43. These baffles are smoothly curved longitudinally at the rear ends thereof in order to impart a twisting or rotary movement to the air as it passes therethrough. Since the air is received in the combustion chamber while it is rotating as well as moving axially, the fuel is admixed and rotates therewith.

The mixture of fuel and air in the combustion chamber is of importance in the efficient and proper operation of the instant engine. A number of longitudinal baffles 76 are secured to the inside surface of the housing 14 and the outside surface of the burner plate 44 which defines the combustion chamber. These baffles extend longitudinally from the front of the combustion chamber to the rear thereof. When the fuel and air mixture moves axially toward the rear of the device, constantly rotating as it is moving rearwardly, the air passing between the number of radially disposed baffles 76 is pulled through the apertures 46 in the burner plate 44 causing turbulence and admixture with the air and fuel within the combustion chamber. In short, the outside layer of air tends to move purely axially through the device while the inside layer or cylinder of air moves axially but rotatively. The proximity of these air columns causes admixture in that some of the axially moving air passes through the apertures 46 to support and insure proper fuel burning.

A conventional igniter 79 is passed through suitable openings in the housing 14 and the burner plate which is rendered operative until such time that the burner plate obtains a sufficiently high heat content to sustain the burning of fuel.

It is recommended that eight baffles 75 be employed radially, as described. It is recommended that eight straight baffles, each of which is indicated at 80 be disposed between an auxiliary venturi 82 and the inside surface of the venturi 16. The baffles or baffle plates 80 straighten the flow of air between the burner and housing and any gaseous products which come into contact therewithin the tail cone. The booster venturi has its open front end in communication with the open rear end of the burner plate 46 and its rear open end slightly beyond the venturi 16.

Means for introducing air under pressure from compressed air bottle 73 toward the rear of the housing is supplied. This means consists of a tubular member (Figure 6) 84 which has a faired head 86 at the front thereof and a reduced portion 88 connecting the head with the tube 84. A plurality of passages 89 are disposed at an angle of inclination with respect to longitudinal axis of the tube 84 communicating with the interior thereof. An air inlet passage tube 92 is operatively connected with the bore of the tubular member 84 and has a valve 94 connected therewith in order to control the air inlet therein.

In operation as a resonant jet, air under pressure is introduced into the tubular member 84 through the control valve 94. This air strikes the forward part of the head 86 and is directed rearwardly through the passages or ports 89. The air passes through the booster venturi 82 which has three radially extending flow straightening baffles or baffle members 95 disposed therein. This causes a suction through the burner plate 46 and also through the housing. The fuel being introduced at this time through the fuel introduction assembly and ignited in the expected manner causes resonant operation of the engine.

When it is desired to employ the device as a ram jet, the valve 74 is open causing introduction of air under pressure through the nozzles 72. This additional air blast directed rearwardly and passing through the venturi as well as the booster venturi causes the valves 66 and 68 to be opened against the opposition force of the springs 52 and 54. Air is then permitted to pass into the housing and through the housing from the front inlet assembly and through the rear tail cone assembly. Obviously, the valve 36 is either remotely and automatically controlled by any suitable well known means, or is manually controlled so as to provide the desired amount of fuel to mix with the additional air admitted.

Having described the invention, what is claimed as new is:

An engine comprising a housing having a cylindrical front end and a tail cone at the rear end, a substantially cylindrical burner plate disposed in said housing and having open front and rear ends, said burner plate being apertured and having longitudinally arranged baffles spacing said burner plate from the inside surface of said housing, means for diffusing and introducing fuel in said substantially cylindrical

burner plate and in the open front end thereof, a valve control device for introducing air in advance of the fuel introduction into said housing for providing additional air to cause selective operation of said engine as a ram jet, an igniter operatively connected with said burner plate, and an auxiliary booster venturi disposed in said tail cone, means for introducing air into the rear open end of said burner plate and for directing it rearwardly with respect to the front and rear ends of said housing thereby causing a suction in said housing to pull free air into the front end of said housing, valves disposed in said housing adjacent the front end thereof, means resiliently opposing the operation of said valves and reacting thereon, said valves being operated by the suction caused by air introduction at the rear end of said burner plate, a tubular member at the open end of said burner plate, smoothly curved baffle plates disposed between said tubular member and said housing and behind said longitudinally arranged baffles for imparting a rotary motion to the air as it passes through said housing, and baffle members disposed between said tubular member and said

booster venturi for straightening the flow of air and any of the products of combustion which come into contact with said air as they pass therethrough.

FELIX A. BLUM.

References Cited in the file of this patent

UNITED STATES PATENTS

Number	Name	Date
617,753	Le Pontois	Jan. 17, 1899
2,195,025	Couzinet	Mar. 26, 1940
2,398,654	Lubbock et al.	Apr. 16, 1946
2,404,335	Whittle	July 16, 1946
2,446,266	Cummings	Aug. 3, 1948
2,477,584	De Zubay	Aug. 2, 1949
2,486,967	Morrisson	Nov. 1, 1949
2,501,633	Price	Mar. 21, 1950
2,526,223	Goddard	Oct. 17, 1950

FOREIGN PATENTS

Number	Country	Date
215,603	Great Britain	May 15, 1924

OTHER REFERENCES

"Flight," Oct. 5, 1944, pages 364–367; 370.