Jan. 30, 1934. G. A. EKSTEDT 1,945,265

SAFETY RAZOR

Filed Dec. 28, 1929

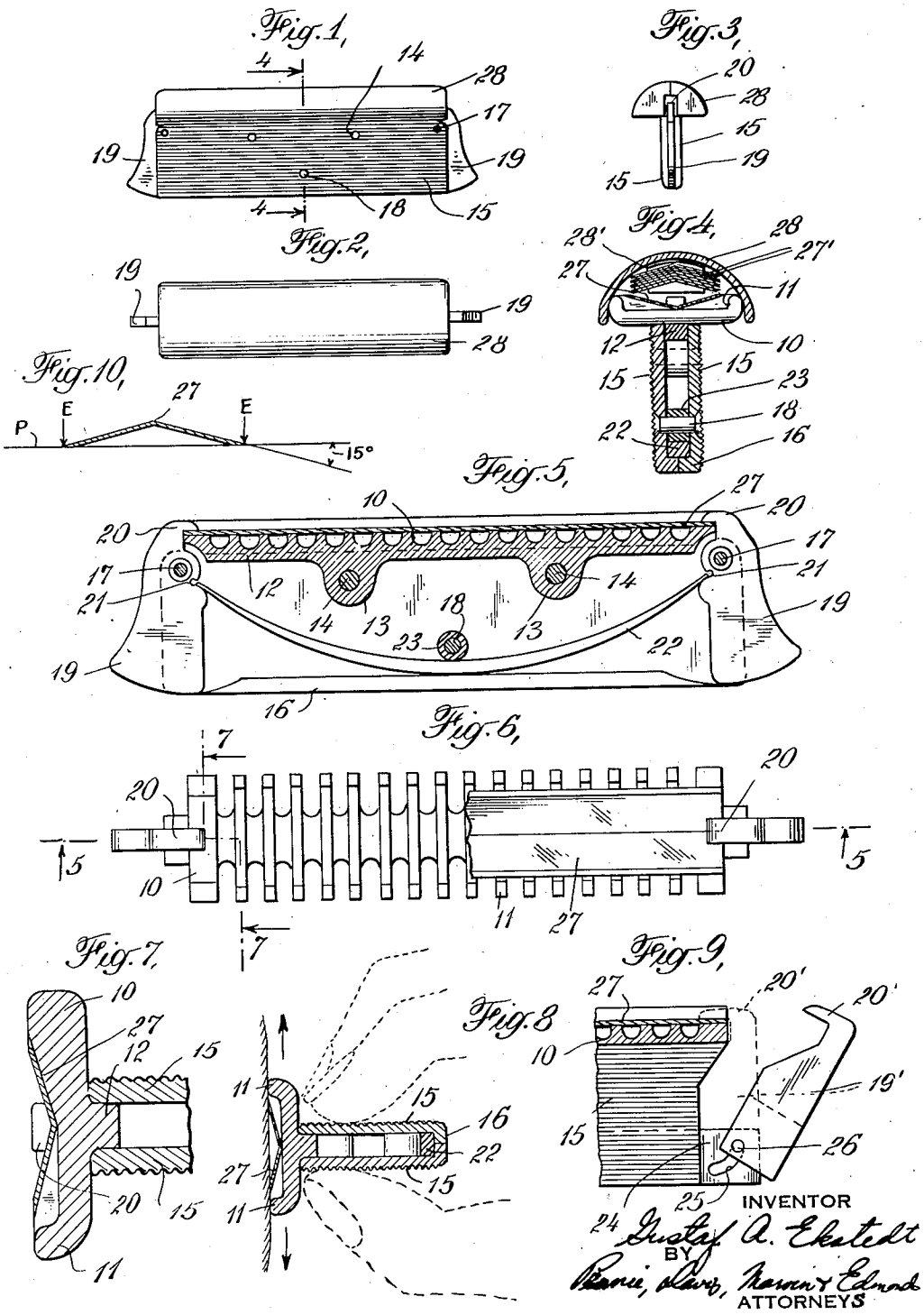

INVENTOR
Gustaf A. Ekstedt
BY
Pennie, Davis, Marvin & Edmonds
ATTORNEYS

Patented Jan. 30, 1934 1,945,265

UNITED STATES PATENT OFFICE

1,945,265

SAFETY RAZOR

Gustav Adolf Ekstedt, Philadelphia, Pa.

Application December 28, 1929
Serial No. 417,084

5 Claims. (Cl. 30—12)

This invention relates to safety razors and has particular reference to the magazine type in which a supply of blades is carried as a portion of the complete razor when the same is not in use for shaving purposes.

The principal object of this invention is to provide an improved safety razor in which a blade of substantially V-shaped section is mounted upon a suitable holder in such a way that, when the razor is used for shaving, the double-edged V-shaped blade permits shaving in two directions by moving the razor backwardly and forwardly over the surface to be shaved.

More specifically, the razor comprises a generally oblong holder of T-shaped cross-section, the upper surface of which is grooved longitudinally for the reception of the blade and slotted transversely at opposite sides adjacent the two edges of the blade. The V-shaped blade is adapted to be placed in this longitudinal groove in such a way that the parallel prongs produced by slotting the opposite sides of the head of the holder extend laterally of the cutting edges of the blade, so as to provide a guard for the two cutting edges of the blade.

Hinged to opposite ends of this holder and constrained in an outward direction by a suitable spring, are a pair of clips each having a lug or hook which overlaps the opposite ends of the V-shaped blade so as to secure it on the holder in the position described. These clips may be moved so that their lugs or hooks are disengaged from the ends of the blade so that the blade may be lifted off or out of the holder for cleaning or sharpening purposes or for replacing it with a new blade. The top of the razor is enclosed with a dome like magazine when not in use for shaving purposes, this magazine containing a plurality of blades and being adapted to be removed in order to place the razor in readiness for the shaving operation.

The blade, as aforesaid, is of V-shaped cross-section, is unperforated, is rigid, and the cutting edges thereof are ground truly in substantially the same plane across the ends of the two flat portions which are joined together along one common edge at an angle to form the V-shaped section of the blade. Thus, simply by inverting the blade and placing it on a whet-stone or the like, the cutting edges thereof may be honed, stropped, or otherwise sharpened.

For a better understanding of the invention, reference is made to the accompanying drawing, in which

Figs. 1, 2, and 3 are respectively side, plan and end views of the improved safety razor of this invention with the blade magazine in position;

Fig. 4 is an enlarged cross-section of the razor as seen along the line 4—4 of Fig. 1;

Fig. 5 is a longitudinal section as seen along the line 5—5 of Fig. 6 with the blade magazine removed;

Fig. 6 is a plan view of the razor with blade partially broken away as it appears when ready for use;

Fig. 7 is an enlarged cross-section as seen along the line 7—7 of Fig. 6;

Fig. 8 is a view illustrating the manner of using the razor of this invention;

Fig. 9 illustrates a modified form of blade grip; and

Fig. 10 is an enlarged and exaggerated cross-section of the novel razor blade of this invention.

In these drawings, numeral 10 designates the top plate of the holder, which is preferably made in one piece and which has up-turned blade-guarding lateral edges 11, forming a longitudinal central groove, as shown in Figs. 4, 7 and 8. These up-turned guard flanges 11 are saw-cut transversely to form guard prongs in the usual way. The lower surface of top plate 10 is provided with a central integral rib 12 having at its center a pair of depending ears 13, which are apertured for the reception of rivets, screws or other fastening means. The ends of top plate 10 are sloped upwardly and outwardly, as shown in Fig. 7, to an angle of approximately 15° for the purpose of receiving and centering the V-shaped blade when it is placed in the longitudinal groove of the top plate 10, as shown in Fig. 7.

Secured to opposite sides of central bottom rib 12 of top plate 10, and against ears 13, which also serve as spacers, by means of rivets 14 passing through ears 13, are a pair of side plates 15, the outer surfaces of which are preferably serrated longitudinally to provide a frictional gripping surface. or they may be knurled or otherwise roughened. The lower edges of side plates 15 are flanged inwardly at 16 to form a bottom for the handle of the razor, these flanges 16 also serving to space the side plates 15 at this point.

These sideplates 15 are apertured at their upper corners for the reception of pins or rivets 17 and at a lower center point for the reception of pin or rivet 18, as shown particularly in Fig. 5.

Inserted in the open ends of the razor formed by the space between the spaced opposite ends of side plates 15, and pivoted upon pins or rivets 17, are a pair of clips 19, each having a portion

which projects beyond the ends of the razor as shown in Fig. 5. These clips may be of any shape, but it is preferred that the projecting ends thereof be curved inwardly and knurled to form finger grips in the manner illustrated. The upper ends of clips 19 are provided with hooks or lugs 20 which are shaped with V-shaped under surfaces so as to clamp and closely engage the ends of the blade lying upon top plate 10 of the razor.

The inner edges of clips 19 adjacent to but below the pivot pins 17 are notched at 21 for the reception of the ends of the leaf spring 22, which is held in place between these notches and a spacer 23 surrounding rivet or pin 18, this spacer also properly spacing the side plates 15.

It will be seen that this leaf spring 22 constrains clips 19 in an outward position as shown, so that the hooks 20 thereof securely clamp the ends of the blade to the top plate 10 of the razor. By moving both clips 19 inwardly about their pivots 17, such as by grasping them between the thumb and forefinger of one hand and squeezing them together, the hooks 20 thereof are swung outwardly so as to disengage the ends of the blade. It will be seen that if only one of these clips 19 is moved inwardly, the hook 20 of the other clip, being of appreciable length and area, will hold the blade in position. This is of value in cases where the razor is dropped and strikes the floor or other surface upon one of the clips 19, which would ordinarily cause the blade to fly out of the holder or frame, but in the present arrangement, hook 20 of the other clip continues to hold the blade in place. At no time can the razor be dropped in such a way that both clips will be displaced at the same time to release the blade.

In Fig. 9 is illustrated a modified form of blade holding arrangement, constituting the end clip 19′ having the blade holding hook 20′ and grooved at the bottom for the reception of lug 24 extending laterally from the end of the razor frame. This lug 24 is provided with an upwardly and outwardly curved slot 25 through which is inserted a pin or rivet 26 secured across the groove in the lower end of clip 19′. It will be seen that when the clip is in blade-holding position, which is illustrated in phantom in Fig. 9, the pin lies in the lower of horizontal end of slot 25 so that the hook 20′ of the clip 19′ is caught in close engagement with the end of the blade. When the clip 19′ is pulled outwardly, the pin 24 moves upwardly and outwardly in slot 25, causing the clip 19′ to move in the same way, so that the hook 20′ of clip 19′ is disengaged from the blade, and the clip lies in the position shown, whereby the blade may be removed. The same kind of a clip is placed in the opposite end of the razor, not shown, and both ends of the blade are disengaged by simultaneously pulling outwardly on both of these clips. In this blade holding arrangement, neither clip 19′ can be displaced if the razor is dropped upon the floor, so that there is no liability of the blade dropping out of the frame or holder unintentionally.

The blade 27 is, as aforesaid, of V-shaped cross-section, rigid and imperforate. These blades are formed of flat strip steel stock which is rolled to a V-shaped cross-section between male and female rolls, which, because of their complementary V-shaped surfaces, automatically maintain the blade stock centered. The angle to which this flat steel stock is rolled is preferably 15° as indicated in Fig. 10, this angle having been found to be the most effective for shaving. This forms a 150° angle between the arms of the V-shaped blade.

After being rolled to this V-shaped section, and as it emerges from between the rolls, the ends of the arms of the V are jointly ground in a common plane designated by P in the exaggerated and enlarged cross-section of the blade illustrated in Fig. 10. This provides the opposite cutting edges designated E in Fig. 10, and the blade may thereafter be honed, stropped, or otherwise sharpened by moving it backwardly and forwardly upon a whetstone or other sharpening surface in the position shown in Fig. 10, i. e., so that the edges E jointly engage the flat sharpening surface P. Obviously, if desired, the edges E of the blade may be hollow ground by grinding them with a circular surface of a grinding wheel, whereby the plane P shown in Fig. 10 will be replaced by a concave curve of large diameter within the concave side of the blade, not shown.

As is clearly illustrated in Figs. 4, 5, 7 and 8, the blade is placed in the holder or frame of the razor in such a way that the concave surface thereof is directed upwardly, and the ends thereof lie on the sloping ends of top plate 10, as shown in Fig. 7, whereby the blade is centered, the user meanwhile pressing clips 19 inwardly so that hooks 20 thereof are displaced outwardly for the insertion of the blade. After properly placing the blade in the holder in the manner described, the user releases the pressure from clips 19 and the leaf spring 22 constrains them outwardly so that V-shaped hooks 20 thereof move over the ends of the blade to clamp the same securely in place in a properly centered position.

When the razor is not in use, the blade 27 is protected by a hood 28, which fits closely over the serrated guard flanges 11 of top plate 10, and is held in place by friction. Held closely within this hood 28 by end spring 28′ are a plurality of blades 27′, properly wrapped in waxed paper, for example, and adapted to be used when blade 27 becomes dull. When the razor is in this form, it is small and compact, and can be conveniently carried without danger of injury in a vest or other small pocket, or the like.

In operation for shaving, the user grasps the razor as illustrated in Fig. 9 and places it flatly against the surface to be shaved. The cutting edges E of the blade 27 lie in the same plane with the top edges of guard flanges 11 of the razor, so that the razor can only cut when placed flatly against the surface to be shaved. If the razor is tipped at an angle to the surface to be shaved, it will be seen that the razor will bear only upon one of the guard flanges 11, whereby the cutting edges E of the blade 27 are withdrawn from the surface to be shaved so that no shaving action can take place.

Because the guard flanges 11 lie in substantially the same plane as the cutting edges E of the blade, they prevent the edges of the blade from digging into the skin, and the serrated guard flange 11 preceding the adjacent cutting edge of the blade distributes the lather and holds down the skin in advance of the blade, so that the skin cannot be cut, and an absolute safety razor is provided. The razor is adapted to be held at an angle to provide a raking cut, and since both cutting edges E of the blade are in operative position when the razor is held flat against the surface to be shaved, the razor will

shave in two directions by moving the razor backwardly and forwardly. Thus, it is not necessary to reverse the razor when it is desired to shave in opposite directions, so that by moving the razor backwardly and forwardly over the surface to be shaved, a double shave is procured in one operation. The term "concave" as applied to the blade refers primarily to its condition when mounted in the holder.

While a preferred embodiment of the invention has been illustrated and described herein, it is to be understood that the invention is not limited thereby, but is susceptible of various changes of form and detail within its scope. For example, the handle comprising parts 15 may be made in one piece and moulded of non-metallic material such as a phenolic resin, or the like.

I claim:

1. In a safety razor, the combination of a holder, a concave blade of substantially rectangular shape having opposite cutting edges lying in the same plane, guard flanges on the holder extending adjacent the cutting edges of the blade and lying substantially in the common plane thereof, and means for removably securing said blade upon said holder with its concave surface directed outwardly for placement against the surface to be shaved with both edges of the blade simultaneously engaging the said surface during the shaving operation.

2. In a safety razor, the combination of a holder having a head and a handle, lateral guard flanges along opposite sides of said head, a substantially rectangular concave blade on said head having opposite cutting edges ground in a common plane and lying substantially in the plane of said flanges so as to be guarded thereby, and movable fastening means mounted on said holder for securing said blade in place therein, for placement against the surface to be shaved with both edges of the blade simultaneously engaging the said surface during the shaving operation.

3. A safety razor comprising a blade having a substantially V-shaped cross-section and opposite cutting edges ground in the same plane, a grooved holder therefor, guard fingers on said holder extending laterally of the cutting edges of said blade, and means for holding said blade upon said holder with its concave face directed outwardly for placement against the surface to be shaved with both edges of the blade simultaneously engaging the said surface during the shaving operation.

4. A razor comprising a blade consisting of a strip of concave cross-section and two parallel cutting edges ground in a substantially common plane across the concave surface of said strip, and a holder for holding said blade with its cutting edges directed upwardly and having guard flanges extending alongside the cutting edges of the blade and lying substantially in the common plane of the cutting edges of the blade for simultaneous placement with both cutting edges of the blade against the surface to be shaved during the shaving operation.

5. In a safety razor, the combination of a rigid concave blade having opposite cutting edges lying in a common plane, a holder having a groove for receiving said blade with its concave surface directed upwardly for placement against the surface to be shaved with both edges of the blade simultaneously engaging the said surface during the shaving operation, and a movable clip lying in the concavity of said blade and connected to said holder for securing the blade thereto, and guards on said holder extending along and lying substantially in the common plane of the cutting edges of said blade.

GUSTAV ADOLF EKSTEDT.