United States Patent

Galpin

[15] **3,651,466**

[45] **Mar. 21, 1972**

[54] VENDING MACHINE CONTROL METERING SYSTEM

[72] Inventor: **Harold Henry Galpin**, Belmont, England

[73] Assignee: **Quickmaid Vending Services Limited**, London, England

[22] Filed: **Feb. 5, 1970**

[21] Appl. No.: **8,800**

[30] **Foreign Application Priority Data**

Feb. 5, 1969 Great Britain 6,197/69

[52] **U.S. Cl.** **340/150**, 340/153

[51] **Int. Cl.** **H04q 9/00**

[58] **Field of Search** ..... 179/2 R, 2 A; 235/92 AC, 61.7 B; 340/150, 151, 147, 153; 346/34; 325/20

[56] **References Cited**

UNITED STATES PATENTS

2,970,877	2/1961	Parsons et al.	346/34
3,045,210	7/1962	Langley	340/150
3,314,049	4/1967	Felcheck	235/92 AC
3,355,576	11/1967	Childers et al.	235/61.7 B
3,365,700	1/1968	Cortner, Jr. et al.	340/153
3,400,378	9/1968	Smith et al.	179/2 A
3,445,814	5/1969	Spalti	340/147 X
3,445,815	5/1969	Saltzberg et al.	340/151 X

OTHER PUBLICATIONS

RCA Technical Notes No. 496, September 1961, sheets 1 and 2, " Tranceiver Using Same Crystal for Transmitting and Receiving," Harold A. Wittlinger

Primary Examiner—Donald J. Yusko
Attorney—Woodhams, Blanchard and Flynn

[57] **ABSTRACT**

Vending and recording apparatus comprising one or more vending machines, a central recording station, signal generator including a radio frequency carrier generator generating a range of radio frequency capable of affording a number of spaced carrier channels of which at least one individual channel is allocated to each of the machines, circuitry for modulating said carrier channels with trains of pay pulses representing cost units indicative of the value of a dispensed article to obtain, when an article is dispensed from the vending machine modulated carrier radio frequency signals capable of being transmitted over a physical transmission line between said central station and said machine, and at said central station circuitry demodulating and amplifying said carrier frequency signals and recording and indicating a signal output representing the value of the dispensed article.

19 Claims, 7 Drawing Figures

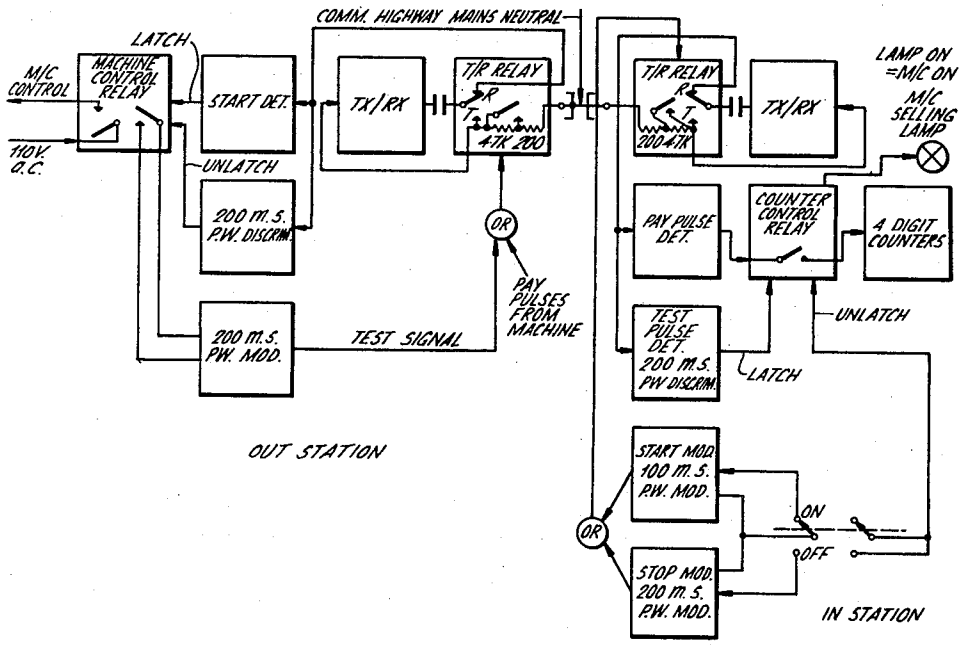

FIG. 1.

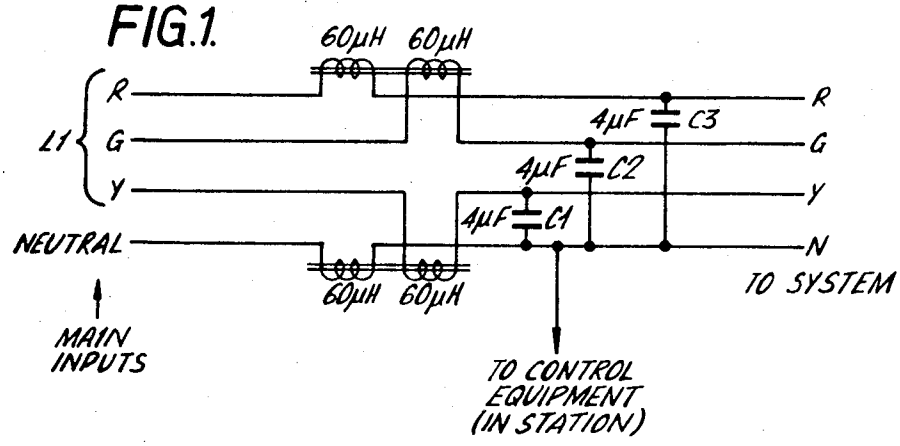

INVENTOR
HAROLD HENRY GALPIN
BY
Woodhams, Blanchard & Flynn
ATTORNEYS

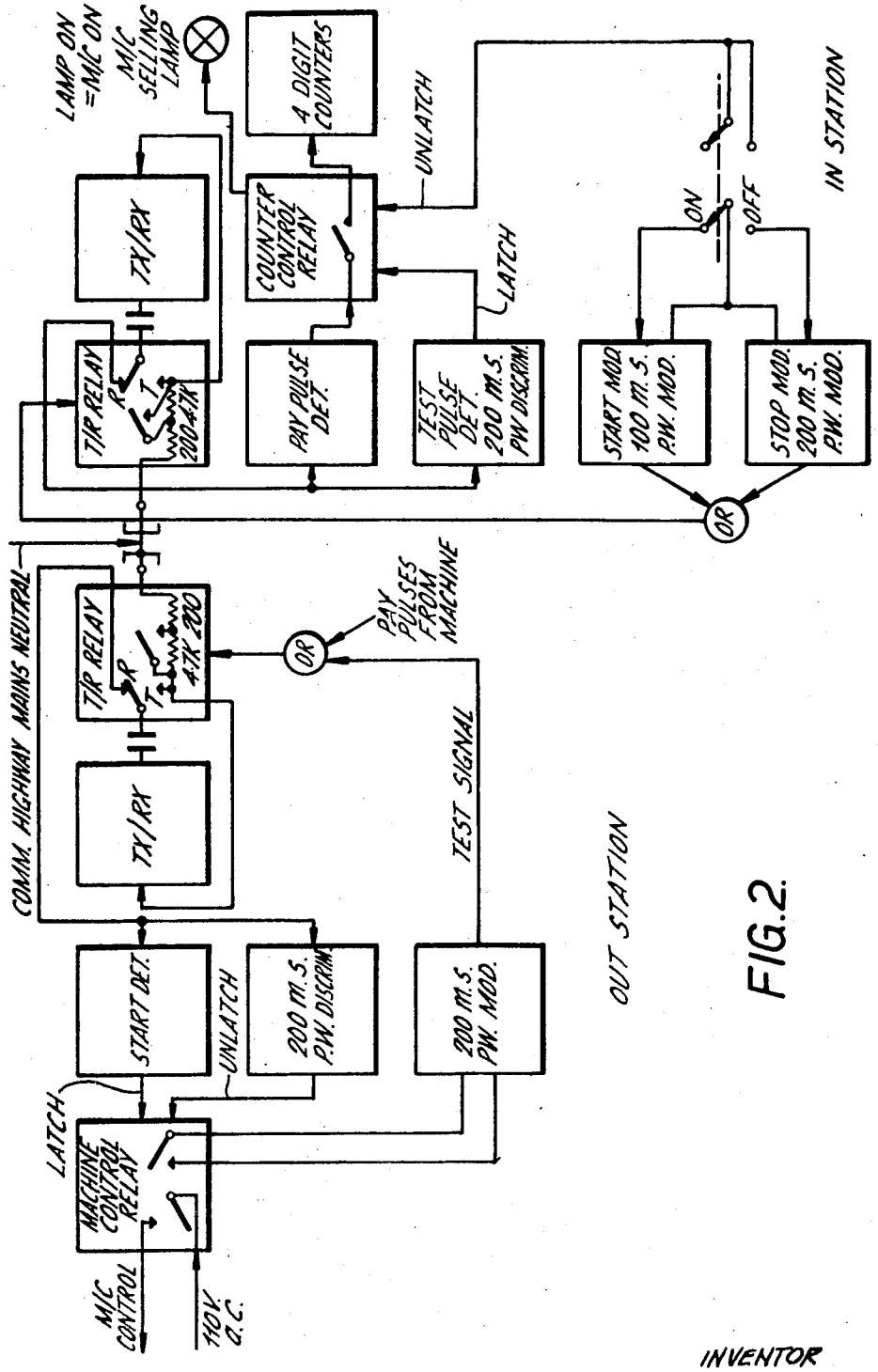

FIG.2

INVENTOR
HAROLD HENRY GALPIN
BY
Woodhams, Blanchard & Flynn
ATTORNEYS

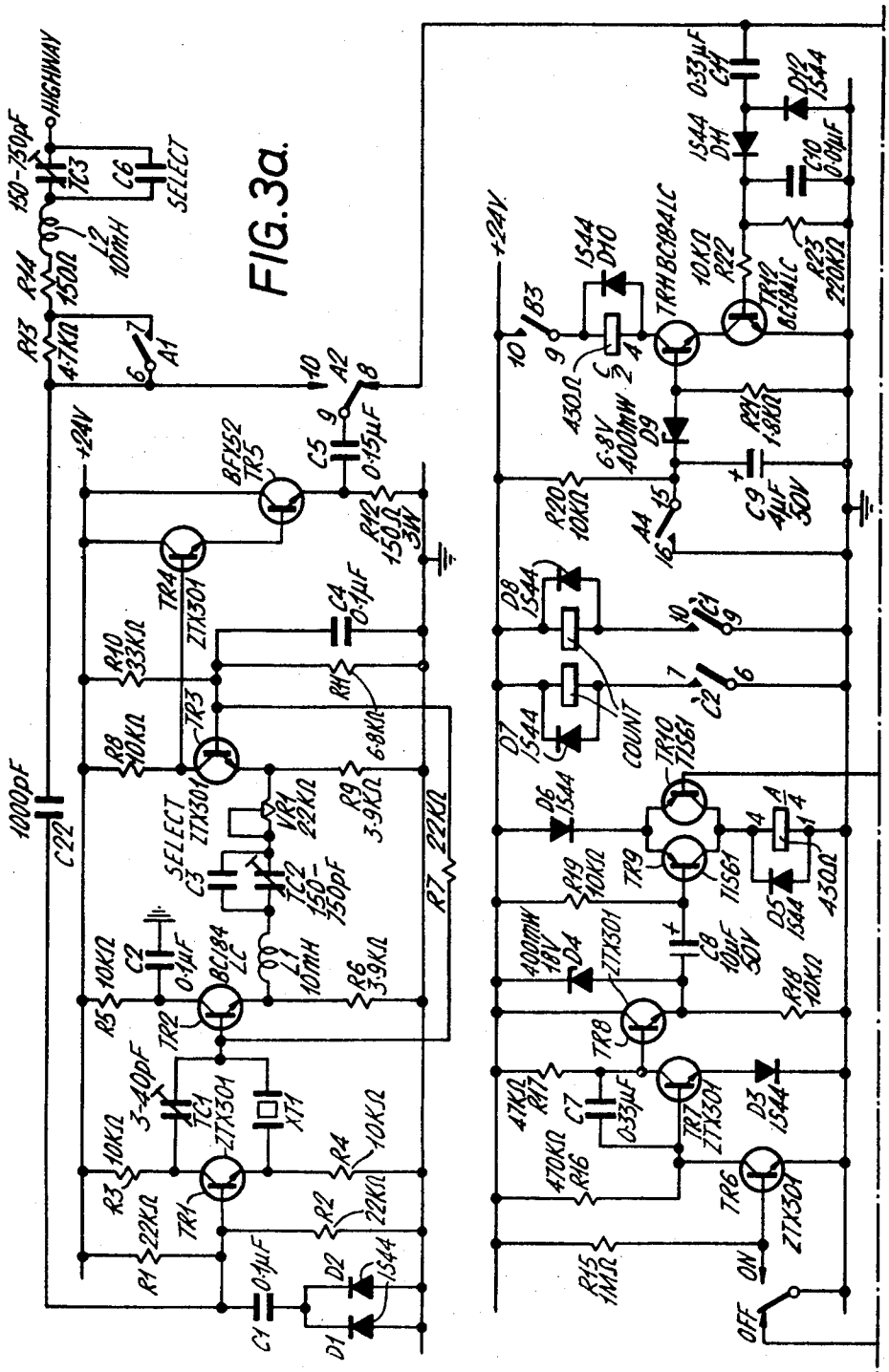

INVENTOR
HAROLD HENRY GALPIN
BY
Woodhams, Blanchard & Flynn
ATTORNEYS

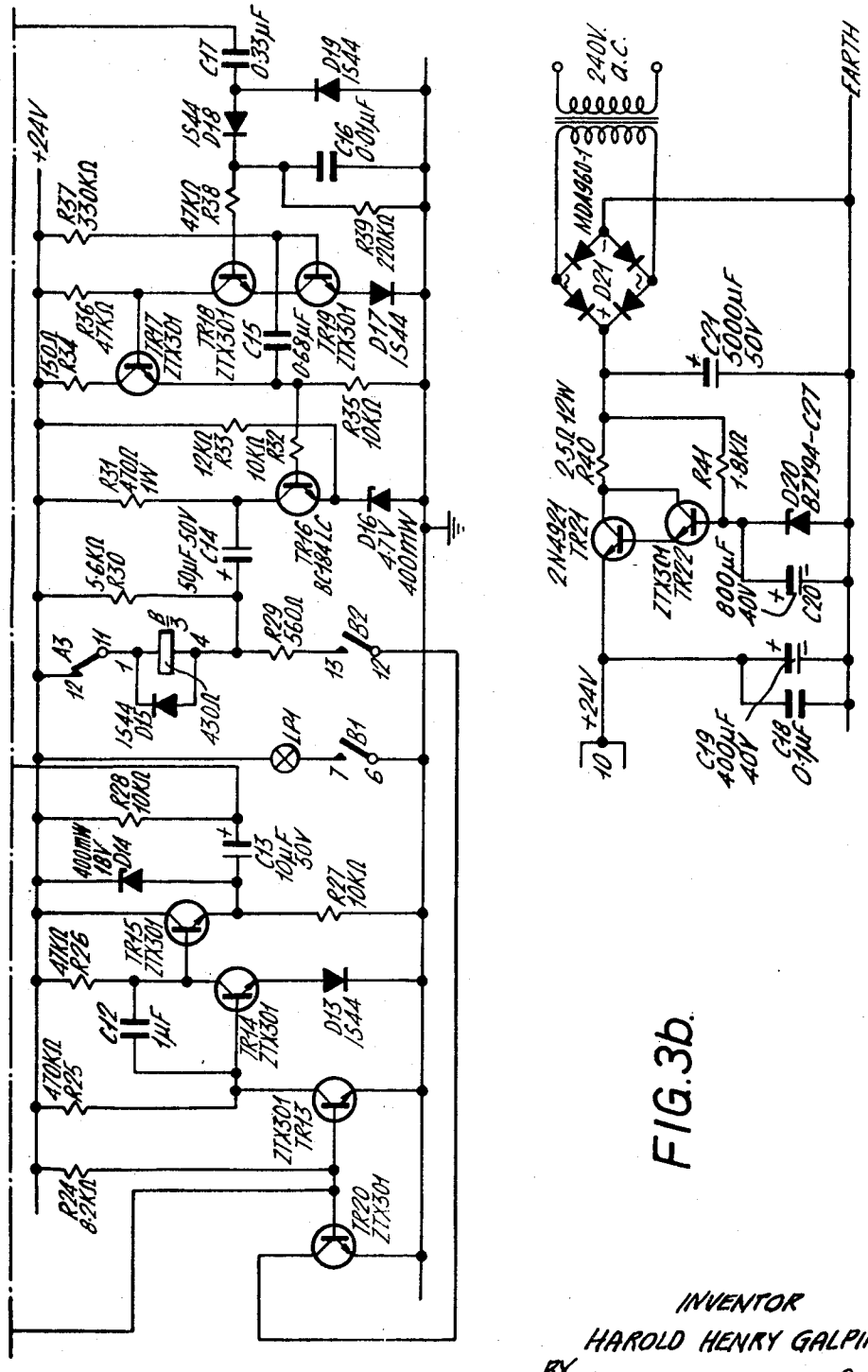

FIG. 3b.

INVENTOR
HAROLD HENRY GALPIN
BY
Woodhams, Blanchard & Flynn
ATTORNEYS

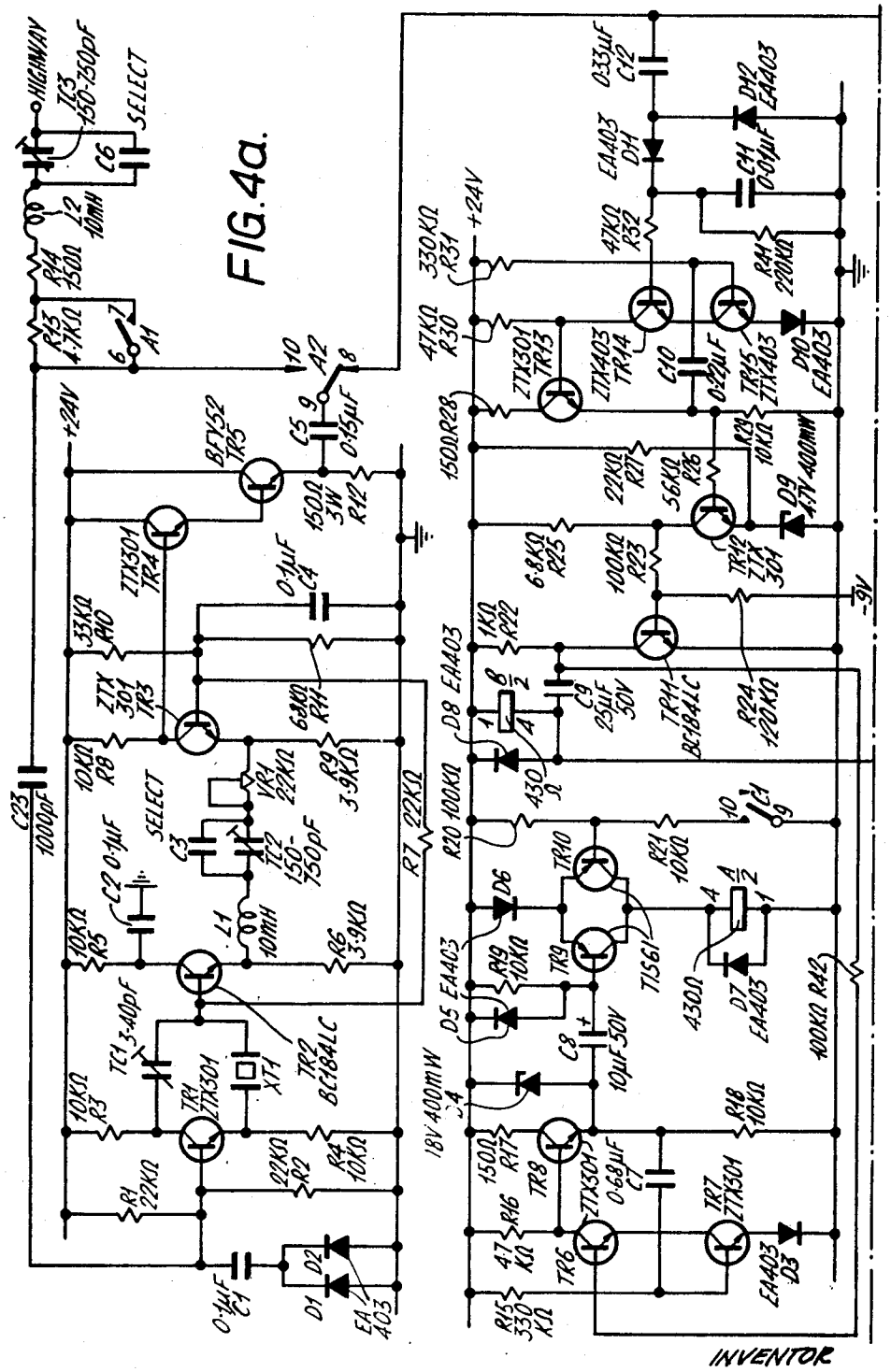
HIGHWAY
SELECT
+24V
-9V
18V 400mW
INVENTOR
HAROLD HENRY GALPIN
BY Woodhams, Blanchard & Flynn
ATTORNEYS

FIG. 4a.

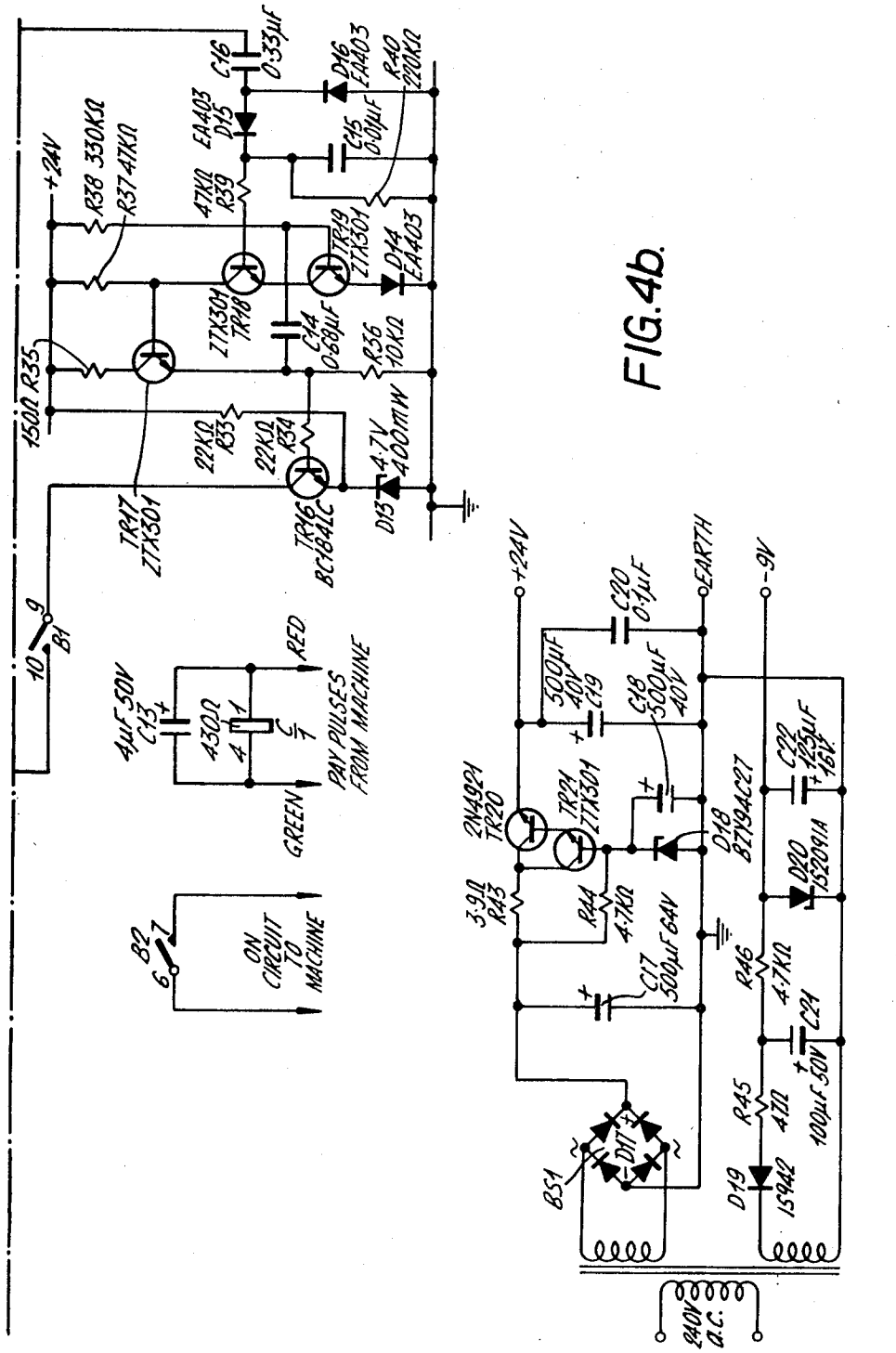

FIG. 4b.

INVENTOR
HAROLD HENRY GALPIN
BY Woodhams, Blanchard & Flynn
ATTORNEYS

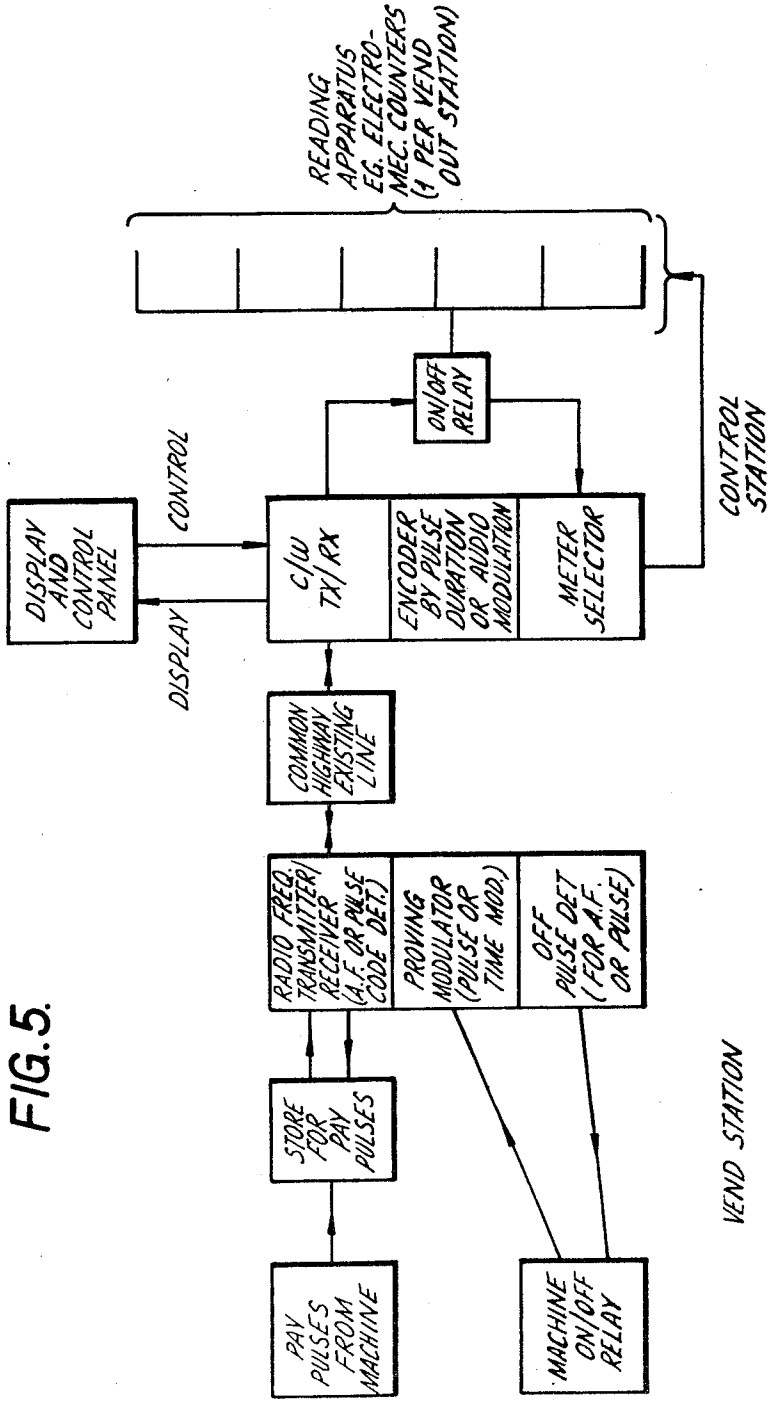

FIG. 5.

INVENTOR
HAROLD HENRY GALPIN
BY
Woodhams, Blanchard & Flynn
ATTORNEYS

VENDING MACHINE CONTROL METERING SYSTEM

The invention relates to installations comprising a number of automatic vending machines arranged to supply goods on a credit basis with facilities permitting the credit to be recorded at a central location.

Prior art has comprised the provision of multi-wire electrical circuits between each machine location and a central accounting position. One of the more usual requirements for such a system is in hotels, in this case it is desirable that not only data related to the purchases made from a machine by the guest be transmitted to and recorded at, for example the accounts office or reception, but, also that the machine may be switched on and off from the same position.

Obviously, it is most inconvenient to install a multi-wire cable network in an established hotel or similar premises. An object of the invention here described, is to permit a number of machines (out-stations) to be controlled and to communicate data related to purchases to a central accounting position where it may be recorded for example on an electromechanical impulse counter.

One well-known form of machine comprises an electromechanical arrangement, which, upon depression, by the user, of a pushbutton delivers to him goods determined by the choice of a particular button. As a result of this operation a train of electrical impulses is emitted which in the basic application is suitable to operate known forms of electrical impulse counters through wires, provided, exclusively for each machine. The number of impulses in each train is related to the value of the purchase. Similarly, a control relay is incorporated in each machine, which, when energized via the said wires energizes the machine. Unless this relay is energized, the machine remains disabled, the guest then being unable to obtain goods from the machine.

The invention consists in vending and recording apparatus comprising a plurality of vending machines, a signal generator for each vending machine comprising a generator of a carrier frequency individual to said machine, means for actuating said signal generator when an article is dispensed from the vending machine to transmit modulated carrier frequency signals capable of being transmitted over a physical line, a signal receiving and recording apparatus common to a plurality of vending machines for receiving, demodulating, and amplifying said carrier frequency signals and for recording and indicating a signal output representing the value of the dispensed article.

An object of the invention is to provide vending and recording apparatus comprising a number of out-stations each comprising one or more vending machines, a central recording station, signal generating means including a radio frequency carrier generator generating a range of radio frequency capable of affording a number of spaced carrier channels of which at least one individual channel is allocated to each of said out-stations, means for modulating said carrier channels with trains of pay pulses representing cost units indicative of the value of a dispensed article to obtain, when an article is dispensed from the vending machine at an out-station, modulated carrier radio frequency signals capable of being transmitted over a physical transmission line between said central station and said out-station, and signal receiving and recording apparatus at said central station for receiving, demodulating and amplifying said carrier frequency signals and for recording and indicating a signal output representing the value of the dispensed article.

A further object of the invention is to provide means for modulating said carrier frequency channels with control pulses different from said pay pulses, and means for discriminating between said control pulses and pay pulses. Appropriately said control pulses are of substantially longer duration than the pay pulses.

Another object is to provide vending and recording apparatus wherein said control pulses include starting and stopping pulses for said vending machines, and for providing a signalling loop when a vending machine at an out-station is switched on.

A still further object is to provide vending and recording apparatus of the kind above referred to wherein the physical transmission line is a polyphase mains network presenting an impedance common to all points between which signal communication is required, various phases of said network being used for communication to the vending machines, and wherein suitable inductive impedances are inserted between said phases and the neutral line of the polyphase network, and the carrier signalling is effected between said neutral line and earth.

Other objects and features of the invention will become apparent from the particular description with reference to the drawings and the claims appended thereto.

The invention is hereinafter described and illustrated by way of example with reference to the accompanying drawings, in which:

FIG. 1 is a circuit diagram in which it is shown how the various rooms in a hotel may be connected to more than one phase of a three phase network;

FIG. 2 is a schematic block diagram of one embodiment of the invention;

FIGS. 3 (*a;b*) and 4 (*a;b*) are circuit diagrams of a central control station and an out-station respectively as shown in FIG. 2; and

FIG. 5 is a block schematic diagram of a central station and one out-station of a further embodiment of the invention.

In order to avoid the problem raised by the prospect of installing multi-core cables, it is obviously desirable to make use of facilities already available in the premises. As described here, the system makes use of the AC power supply wiring, although any other wiring common to the guest room and the accounting center would be equally suitable.

In order to employ the power wiring for communication to and from many points, an RF carrier is utilized, within the range of 40 to 90 kHz. This frequency range is chosen as offering an optimum signal/noise ratio. In order to incorporate a larger number of out-stations (machines) this range could well be extended upward to say 140 kHz.

The system comprises a narrow band A.M. technique, in fact carrier on/off, with separate carrier frequency channels allocated to each out-station. Channel spacing of 500 Hz. is employed in the present scheme, thus permitting 100 channels in the range at present defined or 200 channels should the range be extended to 140 kHz. A further method of increasing the number of channels to 200 would involve spacing at 250 Hz. intervals. The latter spacing probably represents the minimum feasible employing the present techniques.

The type of machine at present considered, develops pay pulses at a repetition rate of 5 per second, that is, a period of 200 milliseconds, one-half of this period representing the pause between pulses. In order to offer simple and inexpensive equipment the present system employs a single quartz crystal controlled carrier frequency generator, which when not being employed for the transmission of signals is utilized as a frequency selective receiver.

As is well known to those versed in the art, the signalling bandwidth required for a given modulated carrier signal is proportioned to the frequency spectrum of the modulating signal. In the case of the pay pulses with a repetition rate of 5 per second and a requirement for rise and fall times say 15 milliseconds, a channel bandwidth of some 20 Hz. at −3 db. response is adequate, thus with 500 or even 250 Hz. spacing is feasible.

The requirement for control functions is met by modulating the carrier with impulses whose duration is substantially greater than the pay pulses. In the present case the active part of each pay pulse is 100 milliseconds and durations of 200 and 300 are employed for readily discriminated pulses for starting and stopping machines in one direction and proving the complete loop by means of a signal initiated when the remote machine is switched on.

In order to effect transmission of the carrier energy between the various points on the system it is necessary to either treat

the supply wiring as a transmission line for electric waves or an impedance common to all points between which communication is required. In the event, the latter is the only amendable solution. Stray mutual impedance comprising the normal wiring are far too variable and it is necessary to insert at a suitable point, impedance comprising inductances typically 60 microhenries. FIG. 1 shows typical arrangements, including those appropriate to installations in which the various rooms are connected to more than one phase of a three phase network.

Carrier signalling is then effected between the neutral wire isolated by the inductive impedances, and earth.

Typically, a carrier level of some 0,5 V. RMS on the common highway due to each signal source is effective, allowing a good signal/noise ratio to be achieved.

Provided that impedance generally as illustrated in FIG. 1 are installed, transmission losses between the various points will be limited to a few decibels.

Power for the transmission system is derived from the transformer already embodied in the machine by means of an additional wiring.

FIG. 2 illustrates one system by a block schematic diagram.

As shown in FIG. 4 the pay pulses from the out-station consist of a short burst of half-wave rectified AC Applied to relay C/1 (FIG. 4*b*) and smoothed by C13 these pulses result in TR10 (FIG. 4*a*) being turned on whilst the C'1 contact of relay C/1 is made. A/2 (transmit relay) is thus operated, resulting in the quiescently receiving circuit TR1 to 5 inclusive being switched on the transmitting condition as now described.

Except, when required for transmission, TR1 to 5 function as a highly selective receiver in the following way. Radio frequency line signals in the range appear at TR1, base from the common highway via C23. TR1, a split load phase inverter, is provided solely for the supply of anti-phase neutralizing signal for crystal filter XT1 in the receive condition, correct adjustment being effected by TC1. R7, the crystal filter load, determines the receiver bandwidth. TR2 and 3 function as an emitter coupled amplifier. L1, C3, TC2 are a series resonant circuit which ensures that in the transmit condition the crystal oscillates only in its principal mode. In receive condition these components provide additional out of channel selectivity. Output stage TR4 and 5 raises the power level to that required for satisfactory operation of subsequent circuits in the receive condition and adequate send level (5 V. RMS) at C5 for transmission.

In the transmit condition, relay contact A2 has changed over and a positive feedback circuit is established via C23 with diodes D1, D2 limiting the drive in order to minimize harmonic distortion. While the transmit condition is maintained by contact A2, with A1 closed, RF power is sent to line via mixing resistor R14 at a frequency determined by the quartz crystal XT1 chosen for the particular channel. L2, C6, TC3 are provided in order to achieve further out of channel selectivity under receive conditions.

Thus, during the ON period of the machine pay pulse, a burst of tone is sent to the highway common to all remote machines and the control station.

Additionally, it is desired for the machine to be switched ON and OFF from the single control point and for a signal to be returned to control for confirmation that it has been effectively switched. For this purpose, two pulse width discriminators TR11 to TR15 (FIG. 4*a*) for detection of a 200 millisecond burst of channel frequency from control as ON and TR16 to TR19 (FIG. 4*b*) for OFF, are provided. These circuits are preceded by voltage doubler rectifier circuits D11, D12 and D15, D16, respectively, to demodulate the incoming carrier signals.

A simple regulated power supply D17, TR20 TR21 (FIG. 4*b*) supplies DC power at 24 volts. D19 etc., provides a negative 9-volt reference supply. The power supply is mounted on a metal panel which serves as a heat sink. All other circuitry is mounted on a single printed circuit panel.

The central station as shown in FIG. 3 comprises transistors TR1 to TR5 which in turn comprise a crystal controlled transmitter/receiver, exactly as in the out-station circuits.

TR7 to TR9 function as a "Miller Integrator"/differentiator pulse generator initiated by pushbutton inputs, time duration in this case for ON control is 200 milliseconds. Similarly, TR14, TR15 function in similar fashion for a 300 millisecond OFF pulse to the remote machine.

Pulse width discriminator TR16 to TR19 follows demodulator D18, D19 and detects the pulse returned by the out-station on the particular channel operating relay B/3 the contacts of which switch the MACHINE ON lamp LP1.

Pay pulses, of shorter duration than the MACHINE ON pulse are detected by pulse amplifier TR11, TR12 which operate relay C/2, in turn the latter drives pulse counters (2). Relay A/4 switches the transceiver from its standby (receive) condition to the oscillating (transmit) condition.

TR21, TR22 etc., provide 24 V. DC at 2A and one power supply is sufficient for 10 channels.

As shown in FIG. 5, a further system which may be used for the transmission of the charge units comprises means for storing at each out-station the units of charge until the out-station is activated by a signal, individual to the said out-station, from the control station whereupon the said out-station transmits to the control station a series of pulses equivalent to the number of stored units. Thus the charge for each vending machine may be read or recorded at a control unit when required.

In operation of the embodiment shown in FIG. 5, a radio frequency transmitter/receiver unit is used to generate a carrier signal at an appropriate frequency.

The signal is then coded by either audio modulation or pulse width method for each out-station on a time cycle basis, for example one frequency for six out-stations on a 1-minute cycle or 10 out-stations on a 2-minute cycle.

The recording meter is synchronized with the encoding unit by means of linked stepper switches.

When the main control is switched on, a pulse of for example 200 milliseconds is generated to bring all six or 10 out-stations into circuit unless any of the out-stations are isolated by an on/off switch.

A time cycle commences and each out-station comes into circuit in turn. Thus each out-station when it is activated emits pulses, clears them from the store (binary or mechanical), and transmits the pulses over a common highway.

The control station receives the pulses and records them on a meter alocated to the appropriate out-station, the linked stepper means ensuring that the correct meter is pulsed.

The pulse transmission and reception means are similar to those hereinbefore described for the first embodiment.

An "Off" pulse from the control station is only able to cut off the counters and switch off the out-stations after the time cycle has been completed.

It is to be understood that carrier frequencies, other than those hereinbefore mentioned modulation techniques other than A.M. (for example frequency phase, pulse timing), and signalling codes other than pulse train and pulse duration (for example, pulse code *m* out of *n* codes), may be incorporated in the apparatus according to the invention.

What I claim is:

1. Vending and recording apparatus comprising a number of out-stations each comprising at least one vending machine, a central recording station, signal generating means including radio frequency carrier generator means for generating a range of radio frequencies capable of affording a number of spaced carrier channels of which at least one individual carrier frequency channel is allocated to each of said out-stations for communication to and from the central station, means at an out-station for modulating the corresponding carrier channel with trains of pay pulses representing cost units indicative of the value of a dispensed article to obtain, when an article is dispensed from the vending machine at the out-station, modulated carrier radio frequency signals capable of being transmitted over a physical transmission line between said central

station and said out-station, signal receiving and recording apparatus at said central station for receiving, demodulating and amplifying said carrier frequency signals and for recording and indicating a signal output representing the value of the dispensed article, means for modulating the same carrier frequency channel as used for said pay pulses with control pulses different in duration from said pay pulses, and means for discriminating between said control pulses and pay pulses applied to said channel, said control pulses including a first pulse for turning on said vending machine so as to enable dispensing thereby and a second pulse for turning off said vending machine to prevent dispensing thereby.

2. Vending and recording apparatus according to claim 1, wherein said control pulses are of substantially longer duration than the pay pulses.

3. Vending and recording apparatus according to claim 1, wherein said first and second pulses differ in duration and are generated at said central station and wherein said control pulses further include a third pulse produced by said out-station in response to receiving of said first pulse for proving a signalling loop when a vending machine at an out-station is switched on, said signalling loop including said central station and said out-station.

4. Vending and recording apparatus according to claim 1, including a physical transmission line interconnecting the central station with the out-stations, said line being a polyphase mains network presenting an impedance common to all points between which signal communication is required, various phases of said network being used for communication to various groups of the vending machines, and wherein suitable inductive impedances are inserted between said phases and the neutral line of the polyphase network, and the carrier signalling is effected between said neutral line and earth.

5. Vending and recording apparatus according to claim 4, wherein operating power for operating the vending machine is obtained from said polyphase mains network by a transformer winding.

6. Vending and recording apparatus according to claim 1, including at each out-station a control relay for controlling the on, off condition of a corresponding vending machine and in a circuit therewith a pulse width discriminator and a start detector fed thereby for detecting said first pulse, means for feeding pay pulses from a vending machine and a pulse width modulator responsive to said pay pulses for applying same to said carrier.

7. Vending and recording apparatus according to claim 6, wherein said pay pulses are fed in through an OR circuit.

8. Vending and recording apparatus according to claim 1, in which said apparatus at the central station includes a recording circuit including a pay pulse detector, a counter for the pay pulses, a counter control relay responsive to detection of pay pulses by said pay pulse detector for energizing said counter, a start pulse modulator and a stop pulse modulator for generating and applying to said same carrier channel said first and second pulses, respectively, and means for enabling and disabling said counter control relay in dependence on the operation of said start pulse modulator and stop pulse modulator, said central station further including a test pulse detector responsive to application of said first pulse to said out-station for enabling said counter control relay.

9. Vending and recording apparatus according to claim 1, wherein at each out-station the signal generating means includes a crystal controlled radio frequency carrier generator arranged for alternate use as a frequency selective receiver, means maintaining said generator in its receive mode when not being used for the transmission of signals and means responsive to said first pulse and at times between said first pulse and said second pulse to said pay pulses for placing said generator in its transmit mode.

10. Vending and recording apparatus according to claim 9, wherein the central station includes a crystal controlled transmitter-receiver operating in a similar manner to the transmitter-receivers at the out-stations and means placing same in its transmit mode contemporaneously with said first and second pulses.

11. Vending and recording apparatus according to claim 10, including means at each out-station for storing data representing cost units until required at the central station, a number of recording units at the central station, interrogating means for bringing each out-station into circuit with a recording meter in timed cyclic succession, and switching means at the central station for actuating said interrogating means.

12. Vending and recording apparatus according to claim 11, wherein the interrogating means comprises a transmitter-receiver for generating a carrier frequency signal, and encoding means for obtaining coded signals modulated on said carrier for each out-station on the time cycle basis.

13. Vending and recording apparatus according to claim 12, wherein the control station includes linked stepper switches for ensuring that a recording meter is in step with the encoding means.

14. Vending and recording apparatus according to claim 12, wherein the encoding means employs pulse width modulation.

15. Vending and recording apparatus according to claim 12, wherein the encoding means employs audio modulation.

16. Vending and recording apparatus according to claim 11, wherein the interrogation cycle includes an "off" pulse which switches off the vending machines from the meters at the termination of the cycle

17. Vending and recording apparatus, comprising in combination:

a plurality of out-stations each comprising at least one vending machine;

transmit-receive means at each out-station for alternatively transmitting and receiving a carrier, each out-station having a unique carrier frequency;

a central recording station having transmit-receive means operable on a carrier frequency channel corresponding to one of said out-stations;

means at one out-station and said central station for normally holding said transmit-receive means thereof in a receiving condition;

OFF-ON switch means at said central station for selecting a turned on and turned off condition for a vending machine at said one out-station;

ON-pulse generator means and OFF-pulse generator means at said central station and responsive to alternate actuation of said switch means for producing a vending machine ON-pulse and a machine OFF-pulse, respectively, and causing said central station transmit-receive means to modulate said carrier with said pulses;

ON-pulse detect means and OFF-pulse detect means at said out-station responsive to reception by said out-station transmit-receive means of a carrier signal modulated on said channel with an ON-pulse and OFF-pulse, respectively, for producing two different outputs;

means responsive to the output of said ON-pulse detect means for turning on said vending machine to enable same to vend upon demand, test pulse generating means responsive to the output of said ON-pulse detect means for producing a test pulse, and means causing said out-station transmit-receive means to generate the channel carrier frequency and modulate same with said test pulse for transmission to said central station;

test pulse detect means connected to a receive output of said central station transmit-receive means for detecting transmission of said test pulse to varify a complete communication loop between said central station and said one out-station and that said ON-pulse has been applied to said one out-station, said test pulse detect means including relay means actuable upon said reception of said test pulse;

means responsive to a vend by said vending machine for causing said out-station transmit-receive means to transmit said channel frequency carrier and to modulate same with a vend signal indicating the cost of the item vended;

vend signal detect means connected to the receive output of said central station transmit-receive means for detecting said vend signal and recording means responsive to said detected vend signal for storing the cost of the item vended;

means enabling said vend signal detect means in response to actuation of said relay means.

18. The apparatus of claim **17** in which vend signal comprises a series of pulses of quantity numerically related to the price of the item vended, said detect means of both central station and out-station being capable of discriminating between pulses of different duration, said ON and OFF pulses differing in duration and said pay and test pulses differing in duration.

19. The apparatus of claim **17** including means disabling said vend signal detect means and test pulse detect means while an ON-pulse is being generated and means for deactuating said relay means in response to selection of the OFF position of said OFF-ON switch.

* * * * *