United States Patent [19]

Wise

[11] **3,739,317**

[45] **June 12, 1973**

[54] **ELECTRICAL FITTING INCORPORATING EQUIPMENT GROUND IN CONNECTION WITH TWO-WIRE AND THREE-WIRE RECEPTACLES**

[76] Inventor: **Melvin Wise**, 223 Bellewood Ave., Dayton, Ohio 45406

[22] Filed: **Oct. 12, 1971**

[21] Appl. No.: **188,237**

[52] **U.S. Cl.** ..... **339/14 P**, 339/31 R, 339/255 R

[51] **Int. Cl.** **H01r 3/06**

[58] **Field of Search** ..... 339/14 R, 14 P, 31, 339/32, 33, 195, 196, 14 RP

[56] **References Cited**

UNITED STATES PATENTS

3,299,390	1/1967	Eckelkamp	339/14 RP
3,308,415	3/1967	Cramer et al.	339/14 R
3,381,258	4/1968	Becker	339/14 P
3,363,214	1/1968	Wright	339/12
3,440,591	4/1969	Whalen	339/14 R

Primary Examiner—Marvin A. Champion
Assistant Examiner—Robert A. Hafer
Attorney—Melvin Wiviott

[57] **ABSTRACT**

An electrical fitting which can be selectively connected to either a three-wire receptacle or a two-wire receptacle by reorientation of the ground male element within the fitting. An equipment ground connection is also established during selective connection between the electrical fitting and either the three-wire receptacle or the two-wire receptacle.

18 Claims, 11 Drawing Figures

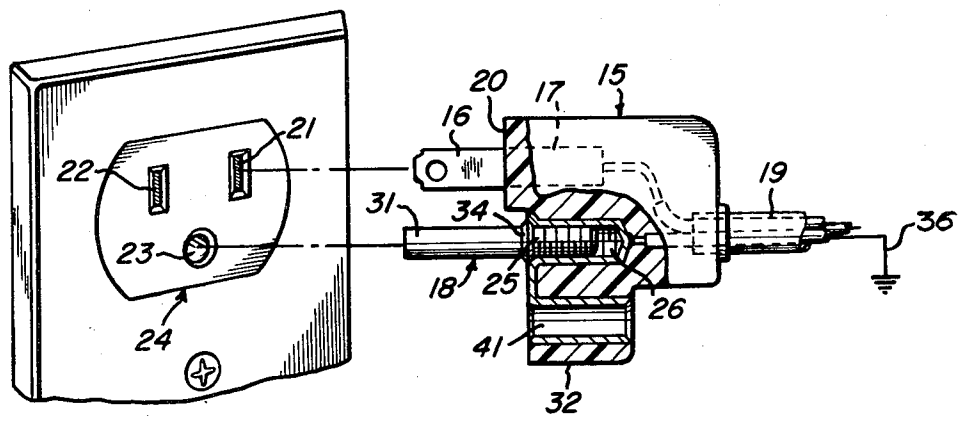

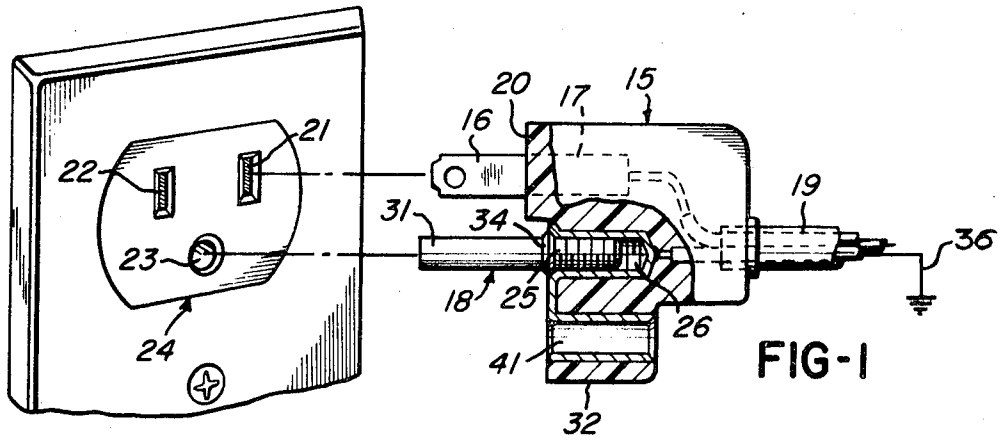

FIG-1

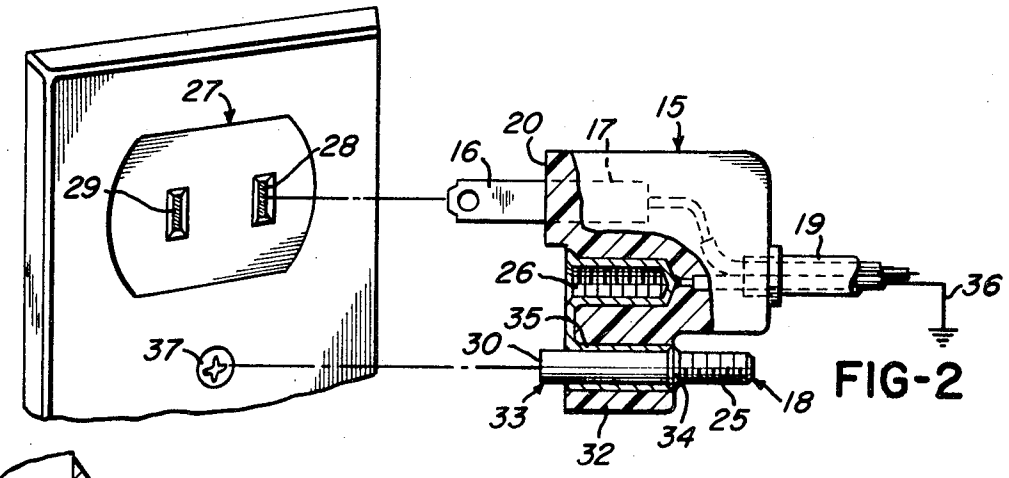

FIG-2

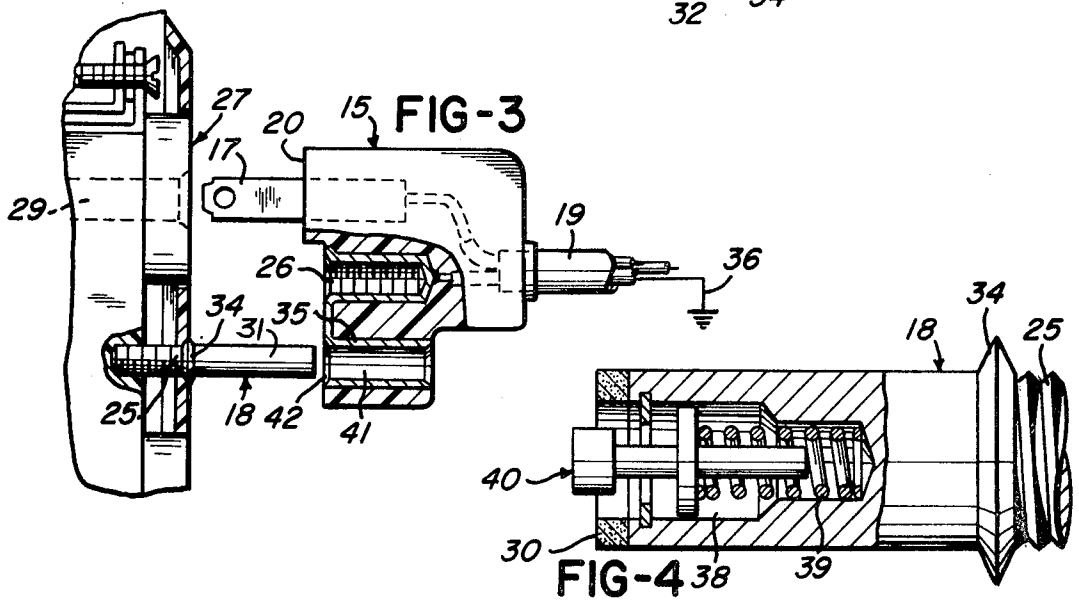

FIG-3

FIG-4

FIG-5

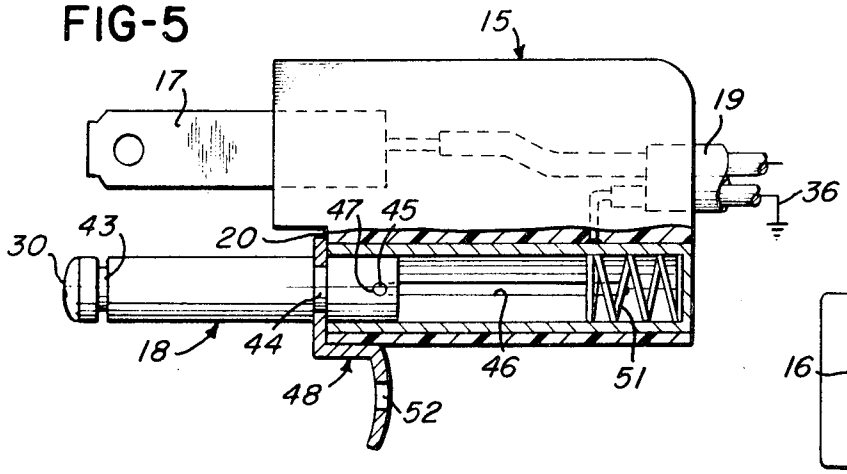

FIG-6

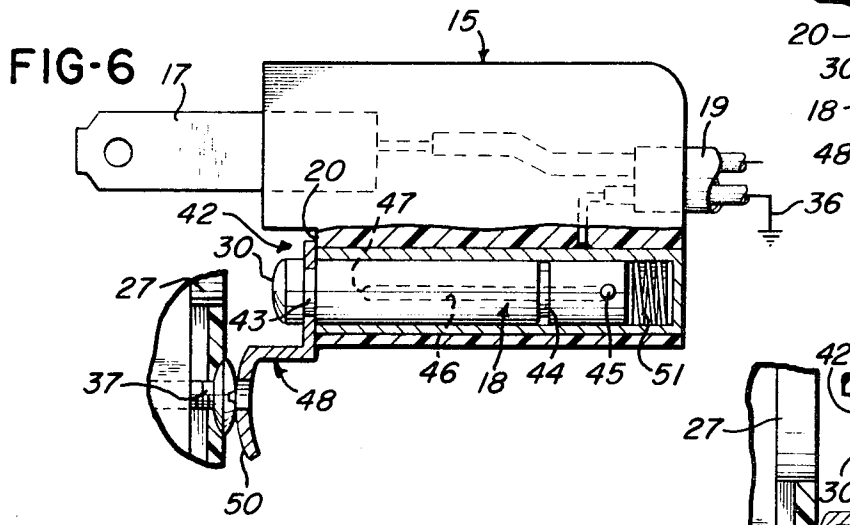

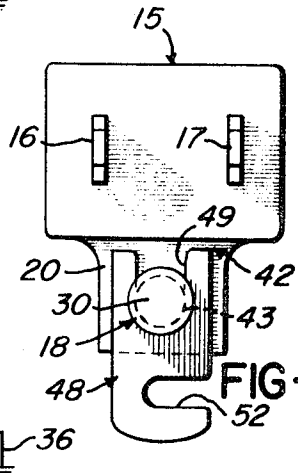

FIG-7

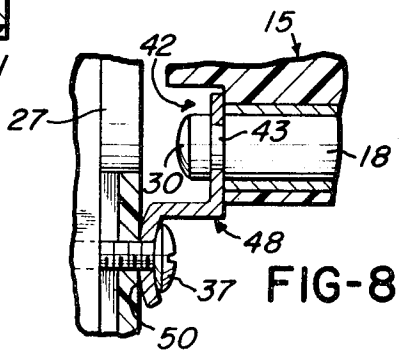

FIG-8

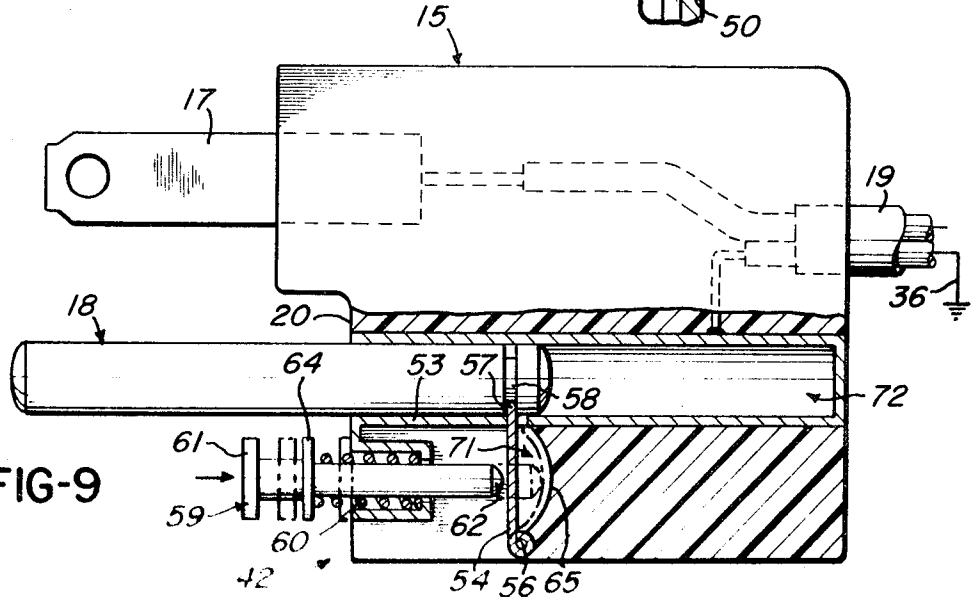

FIG-9

FIG-10

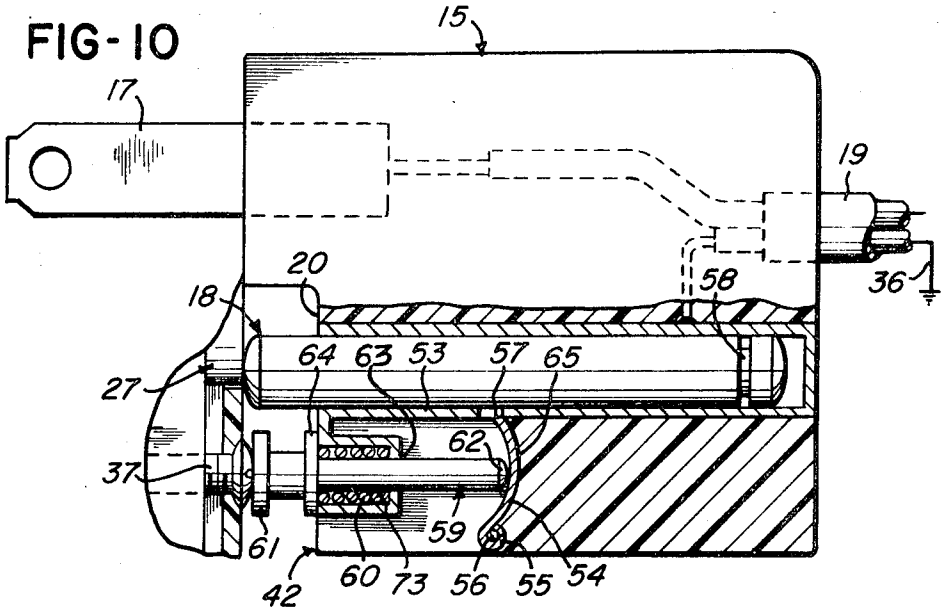
15
17
19
20
18
58
36
64
63
53
57
65
27
62
37
59
61
60
73
56
55
54
42

FIG-11

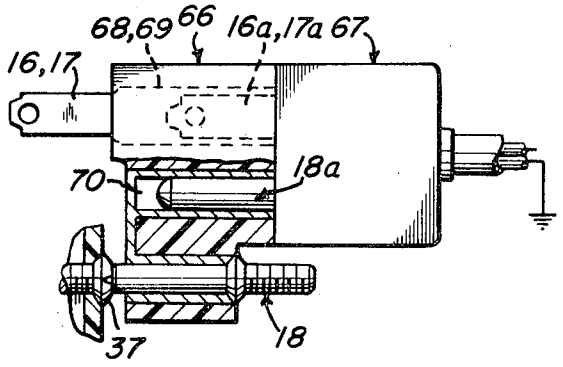
68,69
66
16a,17a
67
16,17
18a
70
37
18

ELECTRICAL FITTING INCORPORATING EQUIPMENT GROUND IN CONNECTION WITH TWO-WIRE AND THREE-WIRE RECEPTACLES

This invention relates to electrical fittings which can be adjusted by the user to provide proper connection with either a two-wire or three-wire receptacle as well as to provide an equipment ground connection with either of the receptacles.

In order to provide increased safety provisions in the use of electrical equipment, a three-wire grounded system is utilized in the more modern receptacle installations. This type of receptacle includes a third female element which is connected to ground. The electric cord attached to modern electrical equipment includes a third wire which is connected at one end to an exposed outer portion of the apparatus which is electrically conductive, such as a metal housing of such an apparatus. The other end of the third wire is electrically connected to ground through use of the three-wire receptacle. If for some reason the "hot", high potential wire of the cord is accidentally grounded to the housing, a short circuit to ground is provided through the use of the three-wire grounded system. This prevents the operator of the electrical equipment in contact with this housing from receiving an electrical "shock" and possible physical injury to himself.

It is easy to understand why virtually all modern electrical appliances include a three-wire cord system containing three prongs in the plug attached respectively to each of the three wires, for use in connection with three-wire receptacles. The basic problem occurs, however, particularly in older buildings, when the only receptacles available are two-wire receptacles. The first question that arises is how to connect a three element plug to a two element receptacle. This problem has attemptedly been solved historically in several different ways.

One means used in the past to connect a three element plug into a two-wire receptacle has been to "break" or cut off the third prong connected to the "third" ground wire. This permits connection with the two-wire receptacle, but obviously does not ground the housing of the electrical apparatus to prevent shocks. In addition, if a three-wire receptacle was later available, a new three element plug would have to be put on the cord replacing the one without the third male element. This is timely, expensive and inconvenient.

Some plugs have been developed with the third ground male element of the plug being removable by being pulled out, with a pliers for example. When needed, this ground male element can be reinserted. The risk with this type of plug is two fold. When connected with a two-wire receptacle after removing the third male ground element, the third ground wire in the cord is still not grounded. In addition, the removed third ground male element could easily be misplaced and/or not reinserted into the plug which then could not be used properly in a three-wire receptacle to establish electrical grounding.

Industrial and commerical installations have been required for a number of years by the National Electrical Code to use a metalic covered conductor, such as B-X cabling or conduit, when "hooking up" wall receptacles. Most large cities also have this requirement set forth by local Codes, which also cover residential property. Consequently the receptacle itself is normally grounded through the B-X cabling or conduit. The

screw holding the cover plate unto the receptacle is therefore also grounded through this receptacle. Because of this receptacle "grounding", superficial attempts have been made in the past to establish a ground connection between the third ground wire attached to the electrical equipment and the two-wire receptacle. One method has been to have an adapter with a ground wire connected to the third female ground element within the adapter and having suitable connection means at the distal end of the wire for attachment to the cover plate mounting screw of the conventional two-wire receptacle. The grounding takes place through the mounting screw which is grounded within the two-wire receptacle. However, problems exist with this type of hook-up. Many people have a tendency to ignore a loose wire hanging from an adapter and also the inconvenience of fastening it to the mounting screw. It may be just too much trouble to hunt for a screw driver to hook up a ground, especially when using a tool such as a power drill for drilling only a few holes. This omission is due to electrical inexperience, not knowing the importance of this wire, or just not wanting to take the time to make the hook-up. In addition, the wire has to be disconnected to remove the plug and is susceptible to breaking off. Probabilities consequently exist of a ground connection not being properly made by the average user of such electrical equipment.

To avoid the problems discussed above, it is desirable to provide a cord plug or adapter device which will easily connect a three-wire cord to either a three-wire receptacle or two-wire receptacle; and also simultaneously maintain electrical ground from the third ground wire through either of these receptacles. The present invention principally defines an improved electrical fitting which will provide these desirable functions.

A feature of this invention is the ease of reorienting the third male ground element (prong) of the electrical fitting within the body of the electrical fitting in order to permit connection of this fitting with either a three-wire or two-wire receptacle.

Another feature of this invention is the utilization of the third male ground element in various oriented positions to provide electrical ground in a simple, easy, safe manner between the third equipment ground wire and either the two-wire or three-wire receptacle.

Still another feature of this invention is to provide and maintain a close physical and electrical contact between the electrical fitting and the two-wire receptacle.

Other features and advantages of the invention will be apparent from the following description taken in conjunction with the accompanying drawings wherein:

FIG. 1 is a partial breakaway side view of one form of electrical fitting with male ground element extended;

FIG. 2 is a partial breakaway side view of the electrical fitting with male ground element in a reoriented retracted position;

FIG. 3 is a partial breakaway view of male ground element replacing receptacle cover plate fastener and inserted into electrical fitting during connection;

FIG. 4 is a fragmentary sectional view of the male ground element;

FIG. 5 is a partial breakaway side view similar to FIG. 1 of a second form of fitting with male ground element extended and with attached external fastener;

FIG. 6 shows a partial breakaway side view of FIG. 5 with the male ground element retracted;

FIG. 7 is a front view of FIG. 5;

FIG. 8 is a fragmentary breakaway view showing engagement of external fastener with cover plate fastener;

FIG. 9 is a breakaway side view similar to FIG. 1 of a third form of fitting with male ground element extended and incorporation of plunger element;

FIG. 10 is a partial breakaway side view of FIG. 9 with the male ground element retracted; and

FIG. 11 shows a partial breakaway side view of an adapter version of FIG. 2.

In the embodiment of FIG. 1, electrical fitting 15 contains a pair of male electrical connector elements 16 and 17 and a third male ground element 18. Elements 16 and 17 can be conventional blade-like elements and are connected electrically within electrical fitting 15 to wires of multi-conductor electrical cord 19. The third male ground element 18 is electrically connected within electrical fitting 15 to the ground wire 36 of electrical cord 19.

Elements 16, 17 and 18 project outwardly from face 20 of fitting 15 and are oriented to be received by female conductor elements 21 and 22 and female ground element 23 of standard three-wire receptacle 24 when electrical fitting 15 is plugged into this receptacle.

The male electrical elements 16 and 17 are permanently contained within electrical fitting 15. The third male ground element 18, however, is affixed within electrical fitting 15 in such a manner as to easily permit its removal from that fitting. This can be accomplished in a variety of ways. One method would be to screw ground element 18 into fitting 15, An external threaded protion 25 of ground element 18 is screwed into a complementary internal threaded portion 26 of fitting 15. The ground element 18 can easily be removed by unscrewing it from fitting 15. Another example of a method to removably affix ground element 18 to fitting 15 is by use of a bayonette type connection. This is commonly used in inserting and removing flash bulbs in camera flash equipment.

In the embodiment of FIG. 2, the third male ground element 18 is reoriented within electrical fitting 15 to permit connective reception of that fitting with a standard two-wire receptacle 27. The male ground element 18 could not be left in the position shown in FIG. 1 since there obviously is no complementary female ground element within the two-wire receptacle for it to be inserted into.

The third male ground element 18 is selectively removed from the position shown in FIG. 1 and its unthreaded end portion 31 inserted within a generally tubular recessed portion 41 of electrical fitting 15 defined within and going through extended portion 32 of fitting 15. This recessed portion extends generally in a direction parallel to the longitudinal axis of male ground element 18 when that element is in its first selective positive as shown in FIG. 1.

The third male ground element 18 is contained within the recessed portion 41 by sliding fit with an end portion 33 protruding beyond electrical fitting 15 through extended portion 32. That portion of electrical fitting 15 defining recessed portion 41 is comprised of electrically conductive material 35 which is connected electrically to ground wire 36 of electrical cord 19. Consequently, when third male ground element 18 is engaged in sliding fit therein, it makes electrical contact with conductive material 35 and becomes electrically connected to the ground wire 36.

When the electrical fitting 15, as shown in FIG. 2, is connected into a two-wire receptacle 27, the male electrical connector elements 16 and 17 are received by female elements 28 and 29. In addition, end portion 30 of the male ground element 18 is oriented within electrical fitting 15 to abutt coverplate fastener 37 of the receptacle.

The female conductor elements 28 and 29 of the two-wire receptacle are normally connected to wires having BX or similar type cabling around them. This BX cabling is grounded and in turn grounds receptacle 27. Other means, such as a third wire, have also been used to ground a two-wire receptacle. Cover plate fastener 37, normally being electrically conductive, is also grounded through receptacle 27 when said receptacle is grounded. Consequently, when male ground element 18 abutts fastener 37, a ground connection is set up between them. This results in a ground connection that has been easily and quickly set up between electrical fitting 15 and standard two-wire receptacle 27. This ground electrically flows from ground wire 36 of electrical cord 19 through the electrically conductive material 35 and into third male ground element 18 which is electrically connected to ground through fastener 37.

Various modifications can be made to the third male ground element 18 to improve the close physical contact between the end portion 30 of male ground element 18 and cover plate fastener 37. The end portion 30 can be comprised of a material having magnetic properties. This end portion 30 will then be magnetically attracted to cover plate fastener 37, which is normally comprised of magnetically attractive material, and thereby maintain a close physical and electrical contact between them.

In order to obtain a still firmer connection between electrical fitting 15 and two-wire receptacle 27, another variation shown by FIG. 3 can be used. The external threaded portion 25 of third male ground element 18 is compatible with the external screw thread of cover plate fastener 37. The cover plate fastener 37 is unscrewed from the two-wire receptacle 27 and is selectively replaced by third male ground element 18. Ridge 34 of the third male ground element 18 holds the receptacle cover in place. The unthreaded portion 31 of the third male ground element 18 protrudes from two-wire receptacle 27 and is contained in a sliding fit within the tubular like recessed portion 41 of electrical fitting 15 when there is connective reception between electrical fitting 15 and two-wire receptacle 27. During connective reception, ridge 34 of the third male ground element 18 is contained within a depressed portion 42 of face 20. This type of connective reception utilizing the third male ground element 18 results in a very firm mechanical connection as well as providing an electrical ground between electrical fitting 15 and two-wire receptacle 27. When electrical fitting 15 is disengaged from two-wire receptacle 27, male ground element 18 can be left in receptacle 27 for future use with this electrical fitting 15, or selectively removed and replaced in electrical fitting 15 as shown by FIG. 1 to enable this fitting to be connectively engaged with a three-wire receptacle 24. Still further, male ground element 18 could be inserted in the tubular recessed portion 41 of electrical fitting 15 (FIG. 2) so that it does not get lost.

Additional modifications to male ground element 18 are shown in FIG. 4. An opening and recessed portion 38 is defined within end portion 30 which abutts cover plate fastener 37. Within this recessed portion 38 is contained spiral spring 39 and an electrically conductive plunger 40, which is electrically connected to and capable of protruding beyond end portion 30 of third male ground element 18. When end portion 30 abutts cover plate fastener 37, spring 39 exerts pressure against plunger 40 forcing this plunger against cover plate fastener 37 to provide a close physical and electrical contact between the third male ground element 18 and fastener 37.

In the embodiment of FIGS. 5, 6, 7, and 8 the third male ground element 18 is again selectively reoriented in several positions to permit the connection of electrical fitting 15 with either a two-wire or three-wire receptacle, as well as establishing a ground connection in each selective position. Male ground element 18 has several indentations in the shape of grooves on its external surface and circumscribing its longitudinal axis. Groove 43 is in the front portion of male ground element 18 as it protrudes from electrical fitting 15 and groove 44 is towards the rear.

In a first selective position shown in FIG. 5, male ground element 18 is in an extended position permitting it to be connectively received by a female ground element when electrical fitting 15 is connected to a three-wire receptacle. Male ground element 18 cannot be fully ejected from electrical fitting 15 because of stopping means which prevents this from happening. Pin 45 is affixed to male ground element 18 and has a sliding fit within groove 46 of electrical fitting 15. When male ground element 18 is extended from electrical fitting 15 a predetermined distance to permit its engagement with the female ground element of a three-wire receptacle, it is prevented from being further ejected from fitting 15 by attached pin 45 hitting the end 47 of groove 46. Male ground element 18 is kept in an extended position and prevented from retraction by an electrically conductive external fastener 48. This external fastener 48 is of a configuration with a slot like opening 49 (FIG. 7) permitting it to be snapped onto male ground element at groove 44. When male ground element 18 attempts to retract within electrical fitting 15, external fastener 48 abutts the face 20 of fitting 15. Since external fastener 48 is attached to male ground element 18, this abuttment prevents male ground element 18 from retracting within electrical fitting 15.

In a second selective position shown by FIG. 6, the male ground element 18 is in a retracted position permitting electrical fitting 15 to be connected to a two-wire receptacle. The head portion 30 of male ground element 18 protruding beyond groove 43 lies within the depressed portion 42 on the face of electrical fitting 15 when said fitting is connected to a two-wire receptacle. When electrical fitting 15 is in connective reception with a two-wire receptacle 27, face 50 of external fastener 48 is in abuttment against electrically conductive cover plate fastener 37. This abuttment is accomplished by external fastener 48 affixed to the male ground element 18 at groove 43 thereon.

External fastener 48 is of a configuration that when attached to groove 43 of male ground element 18 in a retracted position, face 50 is opposite cover plate fastener 37 of the two-wire receptacle. Groove 43 is at a predetermined distance from the protruding head of male ground member 18 and when electrical fitting 15 is connected to the two-wire receptacle, face 50 of external fastener 48 attached to groove 43 is oriented to abutt cover plate fastener 37. The male ground member 18 cannot retract into electrical fitting 15 because the attached external fastner 48 is also simultaneously abutting face 20 of this electrical fitting.

In order to insure an even firmer abuttment of external fastener 48 against cover plate fastener 37 as shown by FIG. 6, spiral spring 51 exerts pressure against male ground member 18 tending to project it from electrical fitting 15. This pressure is conveyed by male ground member 18 to attached external fastener 48 and tends to force fastener 48 into tighter abuttment against cover plate fastener 37.

An even firmer contact between external fastener 48 and receptacle cover plate fastener 37 can be accomplished as shown in FIG. 8. External fastener 48 has a groove 52 (FIG. 7) on an edge portion thereof. This groove 52 is on that portion of the surface of external fastener 48 which is opposite cover plate fastener 37 when in abuttment thereon. However, instead of external fastener 48 being in abuttment against cover plate fastener 37, external fastener 48 is inserted between the head portion of the cover plate fastener 37 and the cover plate of the two-wire receptacle. This is accomplished by rotating external fastener 48 about groove 43 on the male ground element 18 and permitting groove 52 on external fastener 48 to encompass a partially exposed portion of cover plate fastener 37 immediately adjacent to and lying between the head portion of cover plate fastener 37 and the cover plate. Thus, a tight mechanical connection is made between external fastener 48 and cover plate fastener 37.

As can be seen by FIGS. 6 and 8, when electrical fitting 15 is connected with a two-wire receptacle, the electrical ground is accomplished by going from the electrically conductive third male ground element 18, through electrically conductive external fastener 48 and completed through the grounded cover plate fastener 37 of the two-wire receptacle.

Another embodiment of this invention is shown by FIGS. 9 and 10. In FIG. 9, third male ground element 18 is shown in an extended position for utilization as a ground when electrical fitting 15 is connected to a standard three-wire receptacle. In such a projected position, there is connective reception between male ground element 18 and the complementary female ground element of the three-wire receptacle.

Male ground element 18 is maintained in an extended position in the following manner. Electrical fitting 15 defines a hollowed out section 71 adjacent to a first defined recessed portion 72 which is oriented to contain third male ground element 18. This hollowed out section 71 is separated from the first recessed portion by a layer of material 53, defining said first recessed portion, and extends in a direction away from male elements 16 and 17. A springlike device, such as flat spring 54, has an end portion 55 (FIG. 10) affixed within the surface defining the hollowed out section 71 by a fastening means, such as pin 56. The opposite end portion 57 of flat spring 54 protrudes through an opening in the layer of material 53 of electrical fitting 15 and engages in groovelike indentation 58 on third male ground element 18. This groovelike indentation 58 is located adjacent the opening in layer of material 53 when third male ground element 18 is in proper ex-

tended position for connective reception with the complementary female ground element of a three-wire receptacle. Engagement of end portion **57** of flat spring **54** with groovelike indentation **58** of third male ground element **18** maintains third male ground element in a proper extended position for engagement with the complementary female ground element of the three-wire receptacle. Male ground element **18** cannot eject or retract due to abuttment of spring end portion **57** within the opening in layer of material **53** against said layer of material.

In FIG. **10**, third male ground element **18** is shown in a retracted position permitting connective reception of electrical fitting **15** with a standard two-wire receptacle. The male ground element is retracted by disengagement of end portion **57** of flat spring **54** from groovelike indentation **58** of third male ground element **18.** This disengagement is accomplished by flexure of flat spring **54** which causes end portion **57** of flat spring **54** to pull out of groovelike indentation **58** of male ground element **18.**

Electrical fitting **15** further defines a second aperture and recessed portion **73** extending generally in a direction parallel to the longitudinal axis of thid male ground element **18.** The second aperture is on the depressed portion **42** of face **20** of electrical fitting **15** and is opposite the electrically conductive fastener **37** holding the cover plate of a two-wire receptacle **27** when male elements **16** and **17** make connective reception with complementary female conductor elements **28** and **29** of this receptacle.

Within the second recessed portion **73** is contained an electrically conductive plunger-like element **59** and a second spring-like device such as spiral spring **60,** which abutts plunger-like element **59.** Spring **60** tends to project plunger-like element **59** from said second recessed portion **73.** A front end of said plunger-like element **59** has a head portion **61** which can protrude outside of second recessed portion **73.** Plunger-like element **59** also has a rear portion **62** which protrudes through an opening in the surface **63** defining the rear of second recessed portion **73.** The rear portion **62** of the plunger-like element **59** is opposite flat spring **54.** When plunger-like element **59** is depressed into the second recessed portion **73,** rear portion **62** of plunger-like element **59** makes contact with flat spring **54** and can cause it to flex. Consequently, sufficient depression of plunger-like element **59** within the second recessed portion **73** causes rear portion **62** to abutt flat spring **54** and flex it enough to release end portion **57** of spring **54** from engagement with male ground element **18.** This then allows retraction of male ground element **18** within electrical fitting **15.**

In order to keep the end portion **57** of spring **54** aligned for future engagement through the opening in the layer of material **53,** specific mechanical alignment guides adjacent said opening can be used or the flexure of spring **54** can be controlled to maintain end portion **57** within the confines of said opening. FIG. **10** shows several methods of controlling this flexure to allow at least a small section of end portion **57** to remain within the layer of material **53** while spring **54** is in a flexed position. Thus when spring **54** is unflexed, its end portion **57** is already aligned within the opening and will extend through that opening in the layer of material **53** and again be in a position to engage groovelike indentation **58** of the male ground element **18** through that opening.

One method of controlling the flexure of spring **54** would be to have a mechanical stop, such as washer-like element **64,** affixed to plunger-like element **59.** When plunger **59** is sufficiently depressed within the second recessed portion defined within electrical fitting **15,** the rear portion **62** of plunger **59** makes abutting contact with spring **54** and starts to flex said spring. Before spring **54** is flexed enough to withdraw end portion **57** from the opening in layer of material **53;** the depression of plunger **59** is stopped by washer-like element **64,** set at a predetermined distance on plunger **59,** abutting against the face portion **42** of electrical fitting **15.**

Another method of controlling the flexure of spring **54** would be to have a second mechanical stop **65** affixed to electrical fitting **15.** This mechanical stop **65** would be located so that when spring **54** is flexed a predetermined amount, the flexed spring will hit the mechanical stop **65** and thereby be prevented from obtaining greater flexure.

Thus it can be seen that plunger **59** has as one function the abuttment of and flexure of spring **54** to release engagement of spring **54** from male ground element **18** and permit its retraction within electrical fitting **15.** Electrical fitting **15** can then be connected to a two-wire receptacle. When so connected, the head portion **61** of plunger **59** is opposite cover plate fastener **37** and is pushed into abuttment with fastener **37** by spiral spring **60** within the second recessed portion. Plunger **59** is electrically conductive and is electrically connected to ground within electrical fitting **15.** This ground is conveyed by electrically conductive plunger **59** through electrically conductive cover plate fastener **37** and grounded through fastener **37** within the two-wire receptacle. This results in a completed electrical ground circuit between electrical fitting **15** and the two-wire receptacle.

FIG. **11** shows the inventive features used as an adapter version of the electrical fitting **15** shown by FIG. **2.** FIG. **11** defines an adapter **66** for electrically connecting a three-wire male electrical plug **67** with a two-wire female electrical receptacle and completing an electrical ground connection from plug **67** through the two-wire receptacle. Adapter **66** comprises female elements **68** and **69** and a third female ground element **70.** The female elements **68** and **69** of adapter **66** are electrically connected to male elements **16** and **17** of said adapter, respectively; and third female ground element **70** of adapter **66** is electrically connected to the third male ground element **18** of said adapter. The three-wire plug **67** is connected to adapter **66** by engagement of male elements **16*a*, 17*a*** and **18*a*** of said plug with female elements **68, 69** and **70** respectively, of said adapter. After connection, the combination of plug **67** with adapter **66** has the same inventive features as the electricl fitting **15** shown by FIGS. **1 – 4.**

It is obvious, of course, that the electrical fitting described in the other FIGURES may also be modified to an adapter to connect a three-wire plug to a two-wire receptacle. In that case the electrical fitting will have appropriate female elements to receive the plug. Again, the inventive features shown by FIGS. **5 – 10** is applicable to the adapter version(s).

While certain embodiments of my invention have been shown and described, it is understood that it is ca-

pable of many modifications. Changes, therefore, in the construction and arrangement may be made without departing from the spirit and scope of the invention.

I claim:

1. An electrical fitting comprising a body, a pair of male elements carried by said body with each being of a configuration and orientation within said body permitting connective reception in complementary conductor female elements of either a two-wire or three-wire receptacle, a third male ground element carried by said body being removably affixed to said body selectively in a first position and while so affixed is electrically connected to ground within said electrical fitting and oriented within said body to permit connective reception in the complementary female ground element of said three-wire receptacle; said body having a configuration defining an aperture with a recessed portion within said body extending generally in a direction parallel to the longitudinal axis of said third male ground element when in said first position within said body, said aperture being on the face portion of said electrical fitting which is opposite an electrically conductive fastener holding the cover plate of said two-wire receptacle during connective reception of said electrical fitting with said two-wire receptacle, that portion of said body defining said recessed portion being electrically connected to ground and of a configuration allowing said third male ground element to be selectively contained and grounded therein in a second oriented position permitting selective connection of said electrical fitting to said two-wire receptacle, said third male ground element in said second oriented position with an end portion thereof in abutment with said fastener of said cover plate of said two-wire receptacle during connective reception of said complementary pair of male and female elements, said abutment completing an electrical ground connection between said electrical fitting and said two-wire receptacle.

2. The structure of claim 1 wherein said end portion of said third male ground element which abutts said fastener is comprised of a material having magnetic properties; said end portion magnetically attracting said fastener when said fastener is comprised of magnetically attractive material and thereby maintaining a close physical and electrical contact between said third male ground element and said fastener.

3. An electrical fitting comprising a body, a pair of male elements carried by said body with each being of a configuration and orientation within said body permitting connective reception in complementary conductor female elements of either a two-wire or three-wire receptacle, a third male ground element carried by said body being of a configuration and in a first oriented position permitting connective reception in the complementary female ground element of said three-wire receptacle, said third male ground element being removably affixed and electrically connected with ground in a second oriented position in said body permitting selective connection of said electrical fitting to said two-wire receptacle, said third male ground element being aligned in said second oriented position in said body with an end portion of said third male ground element abutting an electrically conductive fastener holding the cover plate of said two-wire receptacle during connective reception of said electrical fitting with said two-wire receptacle, said abutment completing an electrical ground connection between said electrical fitting and said two-wire receptacle, said end portion of said third male ground element which abuts said fastener being of a configuration defining an opening and recessed portion therein; an electrically conductive spring-like device having one end retained within said recessed portion and being electrically grounded therein and the other end protruding beyond said end portion of said third male ground element, said protruding end compressed and exerting pressure on said fastener when abutting thereon and thereby maintaining a close physical and electrical contact between said third male ground element and said fastener.

4. The structure of claim 3 wherein said end portion of said third male ground element which abuts said fastener is comprised of a material having magnetic properties, said end portion magnetically attracting said fastener when said fastener is comprised of magnetically attractive material, the magnetic attraction and spring-like contact between the end portion of said third male ground element and said cover plate fastener provides a close physical and electrical contact between said third male ground element and said fastener when there is connective reception of said pair of said male elements of said electrical fitting and their complementary female elements in said two-wire receptacle.

5. An electrical fitting comprising a body, a pair of male elements carried by said body with each being of a configuration and orientation within said body permitting connective reception in complementary conductor female elements of either a two-wire or three-wire receptacle, a third male ground element carried by said body being of a configuration and in a first oriented position permitting connective reception in the complementary female ground element of said three-wire receptacle, said third male ground element being removably affixed and electrically connected with ground in a second oriented position in said body permitting selective connection of said electrical fitting to said two-wire receptacle, said third male ground element being aligned in said second oriented position in said body with an end portion of said third male ground element abutting an electrically conductive fastener holding the cover plate of said two-wire receptacle during connective reception of said electrical fitting with said two-wire receptacle, said abutment completing an electrical ground connection between said electrical fitting and said two-wire receptacle, said end portion of said third male ground element which abuts said cover plate fastener being of a configuration defining an opening and recessed portion therein; a spring-like device having one end retained within said recessed portion, an electrically conductive plunger-like element having one end retained within said recessed portion and being electrically grounded therein and the other end having a head portion, said spring-like device exerting pressure against said plunger-like element tending to eject said head portion from said recessed portion and forcing said head portion in abutment under pressure against said fastener of said two-wire receptacle to provide a close physical and electrical contact between said third male ground element and said fastener when there is connective reception of said pair of said male elements of said electrical fitting and their complementary female elements in said two-wire receptacle.

6. The structure of claim 5 wherein said head portion of said plunger-like element is comprised of material

having magnetic properties; said head portion magnetically attracting said cover plate fastener when said fastener is comprised of magnetically attractive material, the combination of the pressure of said spring-like device against said plunger-like element and the magnetic attraction of said head portion providing a close physical and electrical contact between said third male ground element and said fastener when there is connective reception of said pair of said male elements of said electrical fitting and their complementary female elements in said two-wire receptacle.

7. An electrical fitting comprising a body, a pair of male elements carried by said body with each being of a configuration and orientation within said body permitting connective reception in complementary conductor female elements of either a two-wire or three-wire receptacle, a third male ground element carried by said body being of a configuration and in a first oriented position permitting connective reception in the complementary female ground element of said three-wire receptacle, said third male ground element being removably affixed and electrically connected with ground in a second oriented position in said body permitting selective connection of said electrical fitting to said two-wire receptacle; said third male ground element selectively affixed within said body in said second oriented position with an end portion of said third male ground element abutting an electrically conductive fastener holding the cover plate of said two-wire receptacle during attachment of said electrical fitting to said two-wire receptacle, a spring-like device contained within said body and positioned to exert pressure against said third male ground element tending to project said third male ground element from said body and thrust it against said two-wire receptacle fastener thereby maintaining a close physical and electrical contact between said third male ground element and said fastener which is electrically connected to ground.

8. An electrical fitting comprising a body, a pair of male elements carried by said body with each being of a configuration and orientation within said body permitting connective reception in complementary conductor female elements of either a two-wire or three-wire receptacle, a third male ground element carried by said body being of a configuration and orientation permitting connective reception in a complementary female ground element of said three-wire receptacle; said body having a configuration defining a first aperture and recessed portion therein oriented to receive insertion of said third male ground element within said body, said first recessed portion having an internal screw thread, said third male ground element having an end portion thereof containing an external screw thread compatible with the external screw thread of an electrically conductive fastener holding the cover plate of a two-wire receptacle and complementary to the internal screw thread of first recessed portion, said third male ground element being removably affixed to said body selectively in a first position by engagement of said external screw thread of said third male ground element with said complementary internal screw thread of said first recessed portion and while so affixed is electrically connected to ground within said electrical fitting and oriented within said body to permit connective reception in said complementary female ground element of said three-wire receptacle; said body having a configuration defining a second aperture and recessed portion within said body extending generally in a direction parallel to the longitudinal axis of said third male ground element when in said first position within said body, said second aperture being on the face portion of said electrical fitting which is opposite said electrically conductive fastener holding said cover plate of said two-wire receptacle when said pair of male elements make connective reception with said complementary female elements of said two-wire receptacle, that portion of said body defining said second recessed portion being electrically connected to ground and of a configuration allowing the unthreaded portion of said third male ground element to be inserted therein in a sliding fit thru said second aperture; said third male ground element removably affixed selectively in a second position replacing said fastener holding said cover plate of said two-wire receptacle, said external screw thread of said third male ground element engaging the complementary internal screw thread within said two-wire receptacle, said unthreaded portion of said third male ground element contained in a sliding fit within said second recessed portion within said body when said pair of male elements make connective reception with said complementary female elements of said two-wire receptacle to provide a close physical and electrical ground contact between said two-wire receptacle and said electrical fitting as well as providing a firm connection between said electrical fitting and said two-wire receptacle during connective reception thereof.

9. The structure of claim **8** wherein said third male ground element contains a ridge of material adjacent said external screw thread thereon, said ridge of material abutting said cover plate and holding said cover plate to said two-wire receptacle when said third male ground element is selectively removably affixed in said second position replacing said conductive fastener holding said cover plate.

10. The structure of claim **8** wherein said third male ground element contains a ridge of material adjacent said external screw thread thereon, said body of said electrical fitting defining a depressed portion on the face portion thereof through which said third male ground element protrudes when selectively affixed in said first position, said ridge of material contained within said depressed portion when said third male ground element is in said first position and said electrical fitting is in connective reception with said three-wire receptacle; said third male ground element selectively affixed in said second position replacing said fastener holding said cover plate of said two-wire receptacle, said ridge of material abutting said cover plate thereby holding said cover plate to said two-wire receptacle, said body defining a depressed portion on the face portion thereof where said second aperture is defined, said ridge of material contained within this said depressed portion when said third male ground element is in said second position and said electrical fitting is in connective reception with said two-wire receptacle.

11. An electrical fitting comprising a body, a pair of male elements carried by said body with each being of a configuration and orientation within said body permitting connective reception in complementary conductor female elements of either a two-wire or three-wire receptacle, a third male ground element carried by said body being of a configuration and orientation permitting connective reception in a complementary female ground element of said three-wire receptacle; a

face portion of said body through which said pair of male elements and said third male ground element project, said face portion containing a depressed portion therein encompassing the area through which said third male ground element protrudes and continuing away from said pair of said male elements, said depressed portion creating an access opening to a segment of said third male ground member when said electrical fitting is selectively plugged into either a two-wire or three-wire receptacle, said body being of a configuration defining an aperture and recessed portion therein oriented to receive insertion of said third male ground element within said body from its extended position, stopping means within said recessed portion to engage said third male ground element and prevent ejection from said recessed portion; said third male ground member selectively prOjecting from said recessed portion in either of several positions, a first projected position permitting connective reception of said third male ground member with said complementary female ground element of said three-wire receptacle, said third male ground element having indentations on its external surface, an external fastening means having a configuration permitting it to be affixed unto said third male ground element by engagement with a first of said indentations, said first indentation on third male ground element in said first projected position located on a segment thereof lying within said depressed portion of said face, said third male ground element being restrained from retracting from said first projected position into said recessed portion by said external fastening means affixed thereto within said depressed portion of said face by engagement with said first indentation and having a surface of said external fastening means making abutting contact with said body of said electrical fitting; a second projected position of said third male ground element permitting connective reception of said electrical fitting with said two-wire receptacle, said third male ground element being retracted within said recessed portion of said body to allow connective reception of said male elements of said electrical fitting with said complementary conductor female elements of said two-wire receptacle, an electrically conductive external fastening means having a configuration permitting it to be affixed onto said third male ground element by engagement with a second of said indentations located on a front portion of said third male ground element lying within said depressed portion of said face upon said electrical fitting being in connective reception with said two-wire receptacle, a surface of said electrically conductive external fastening means being of a configuration to make abutting contact with an electrically conductive fastener holding the cover plate of said two-wire receptacle to complete an electrical ground connection from said third male ground element thru said electrically conductive external fastening means and thru said conductive cover plate fastener.

12. The structure of claim **11** wherein a spring-like device is contained within said recessed portion, said spring-like device exerting pressure against said third male ground element which tends to project said third male ground element from said body and consequently thrust said attached electrical conductive external fastening means into abuttment under pressure with said electrically conductive fastener holding the cover plate of said two-wire receptacle to complete the electrical ground connection.

13. The structure of claim **11** wherein said electrical conductive external fastening means has a surface defining a groove-like opening, said groove-like opening being on that portion of the surface of said external fastening means which is opposite said electrically conductive fastener holding said cover plate of said two-wire receptacle when in an abutting position thereon and continuing to an opening on a side and edge portion thereof, said external fastening means capable of being rotated about the longitudinal axis of said third male ground element at the point of engagement with said indentation thereon, said external fastening means rotated about said axis and said groove oriented to encompass a partially exposed portion of said cover plate fastener immediately adjacent to and lying between the head portion thereof and said cover plate, said cover plate fastener when selectively in a tightened position firmly engages said surface defining said groove-like opening between said head portion of said cover plate fastener and said cover plate thereby holding said external fastening means in both tight mechanical and electrical contact to complete the electrical ground connection.

14. An electrical fitting comprising a body, a pair of male elements carried by said body with each being of a configuration and orientation within said body permitting connective reception in complementary conductor female elements of either a two-wire or three-wire receptacle, a third male grOund element carried by said body being of a configuration and orientation permitting connective reception in a complementary female ground element of said three-wire receptacle; said body having a configuration defining a first aperature and recessed portion therein oriented to receive insertion of said third male ground element within said body, said body having a configuration defining a hollowed out section adjacent said first recessed portion and separated therefrom by a layer of material of said body defining said first recessed portion, said hollowed out section lying in a direction away from said pair of male elements, a first spring-like device within said hollowed out section, said first spring-like device having an end portion affixed to said body at a point on the surface defining said hollowed out section away from said first recessed portion and the opposite end portion of said first spring-like device extended through an opening defined within said layer of material and protruding into said recessed portion; said third male ground element having an indentation on its external surface, said third male ground element selectively oriented in said recessed portion in either of several positions, a first extended position permitting connective reception of said third male ground element with said complementary female ground element of said three-wire receptacle, said third male ground element being restrained from retracting into said recessed portion or ejecting therefrom by said end portion of said first spring-like device protruding into said recessed portion and engaging said indentation of said third male ground element, said indentation located so that said engagement therewith orients said third male ground element in an extended position permitting said reception of said third male ground element with said complementary female ground element; said body having a configuration defining a second aperture and recessed por-

tion within said body extending generally in a direction parallel to the longitudinal axis of said third male ground element, said second aperture being on that portion of the face of said electrical fitting which is opposite an electrically conductive fastener holding the cover plate of said two-wire receptacle when said pair of male elements make connective reception with said complementary female conductor elements of said two-wire receptacle, a second spring-like device retained within said second recessed portion, an electrically conductive plunger-like element contained by said second recessed portion and being electrically connected to ground therein, one end of said plunger-like element having a head portion capable of protruding beyond said second aperture outside of said second recessed portion, the other end of said plunger-like element having a rear portion opposite said first spring-like device and capable of making contact with said first spring-like device, said plunger-like element being depressed within said second recessed portion to permit said rear portion of said plunger to make contact with said first spring-like device and exert pressure against it causing it to flex, the flexure of said first spring-like device removing said end portion of said first spring-like device from engagement with said indentation of said third male ground element and thereby permitting retraction of said third male ground element within said first recessed portion; a second position of said third male ground element permitting connective reception of said electrical fitting with said two-wire receptacle, said third male ground element being retracted within said first recessed portion of said body preventing abutment against said two-wire receptacle and allowing connective reception of said male elements of said electrical fitting with said complementary conductor female elements of said two-wire receptacle, and said second spring-like device exerting pressure against said plunger-like element forcing said head portion against said electrically conductive fastener of said two-wire receptacle to provide a close physical and electrical ground contact between said two-wire receptacle and said electrical fitting during connective reception thereof.

15. The structure of claim **14** wherein said first spring-like device within said hollowed out section comprises a flat spring with means of keeping said end portion thereof within said opening defined within said layer of material defining said recessed portion to enable said end portion of said first spring-like device to engage said indentation of said third male ground element when said third male ground element is properly positioned so said indentation on its external surfaces is opposite said opening within said layer of material; said head portion of said plunger-like element comprised of material having magnetic properties, said head portion magnetically attracting said fastener of said two-wire receptacle when said fastener is comprised of magnetically attractive material and thereby maintaining a close physical and electrical ground contact between said two-wire receptacle and said electrical fitting during connective reception thereof.

16. The structure of claim **14** wherein said body defines a depressed portion on the face portion thereof through which said head portion of said plunger-like device projects, said depressed portion therein retaining said head portion of said plunger-like element when said electrical fitting is selectively connected to a three-wire receptacle; said head portion of said plunger-like device being readily accessible within said depressed portion, said plunger-like device selectively depressed within said second recessed portion by pressure applied to said accessible head portion, said rear portion of said depressed plunger-like device making contact with and causing flexure of said first spring-like device causing said end portion thereof to disengage from said third male ground element and thereby releasing said third male ground element for retraction thereof within said first recessed portion and permitting selective connection of said electrical fitting with said two-wire receptacle.

17. The structure of claim **16** wherein stopping means prevent said first spring-like device from being flexed beyond a predetermined amount, said limited flexure of said first spring-like device being great enough to permit disengagement of said end portion thereof with said third male ground element but insufficient to remove said end portion of said first spring-like device from being oriented in a position permitting future engagement with said third ground male element upon release of flexure of said first spring-like device.

18. The structure of claim **16** wherein stopping means prevent said plunger-like device from being depressed beyond a predetermined distance, said rear portion of said depressed plunger-like device making contact with and causing flexure of said first spring-like device, said flexure being limited by said predetermined depressed distance of said plunger like device, said limited flexure of said first spring-like device being great enough to permit disengagement of said end portion thereof with said third male ground element but insufficient to remove said end portion of said first spring-like device from being oriented in a position permitting future engagement with said third ground male element upon release of flexure of said first spring-like device.

* * * * *