United States Patent [19]

Schwartz

[11] **Patent Number: Des. 286,134**

[45] **Date of Patent: ** Oct. 14, 1986**

[54] **CORD REEL WITH INTEGRAL LIGHT**

[75] Inventor: **Frederic W. Schwartz,** Providence, R.I.

[73] Assignee: **Cable Electric Products, Inc.,** Providence, R.I.

[**] Term: **14 Years**

[21] Appl. No.: **543,816**

[22] Filed: **Oct. 25, 1983**

[52] **U.S. Cl.** **D8/358;** D13/40

[58] **Field of Search** ..... D13/11, 30, 40; D8/358-359; 242/84.8, 85, 96, 107, 107.13, 115, 116; 339/5 RL, 113 L, 119 C; 191/12.2 R, 12.4; D26/38, 51

[56] **References Cited**

U.S. PATENT DOCUMENTS

D. 260,985	9/1981	Moylan	D8/359 X
4,220,293	9/1980	Gename	D8/359 X
4,338,497	7/1982	Drew	191/12.4
4,520,239	5/1985	Schwartz	191/12.4

OTHER PUBLICATIONS

"Sidewinder I" Electrical Cord Reel-Electrical Construction and Maintenance, Jan. 1978.

"Stor-A-Lite" TM Cable Electrical Products-Hardware Age, Aug. 1983, p. 195.

Primary Examiner—Wallace R. Burke

Assistant Examiner—Brian N. Vinson

Attorney, Agent, or Firm—Paul J. Sutton

[57] **CLAIM**

The ornamental design for a cord reel with integral light, as shown and described.

DESCRIPTION

FIG. **1** is a perspective view of a cord reel with integral light showing my new design;

FIG. **2** is a front elevation thereof;

FIG. **3** is a left side elevation thereof, the opposite side being substantially similar;

FIG. **4** is a top plan view thereof;

FIG. **5** is a rear elevation thereof; and

FIG. **6** is a bottom plan view thereof.

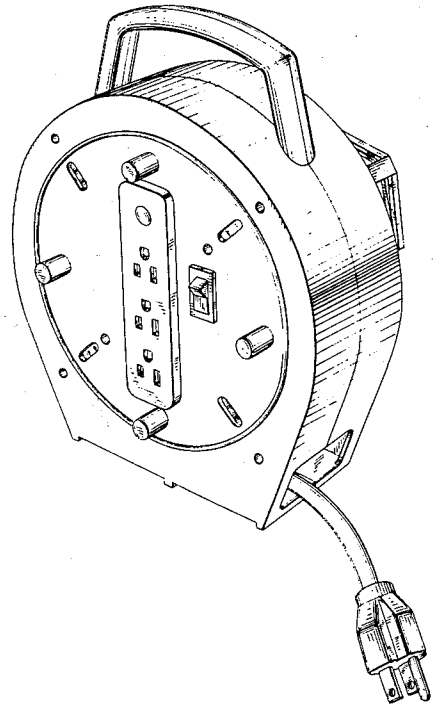

FIG. 1

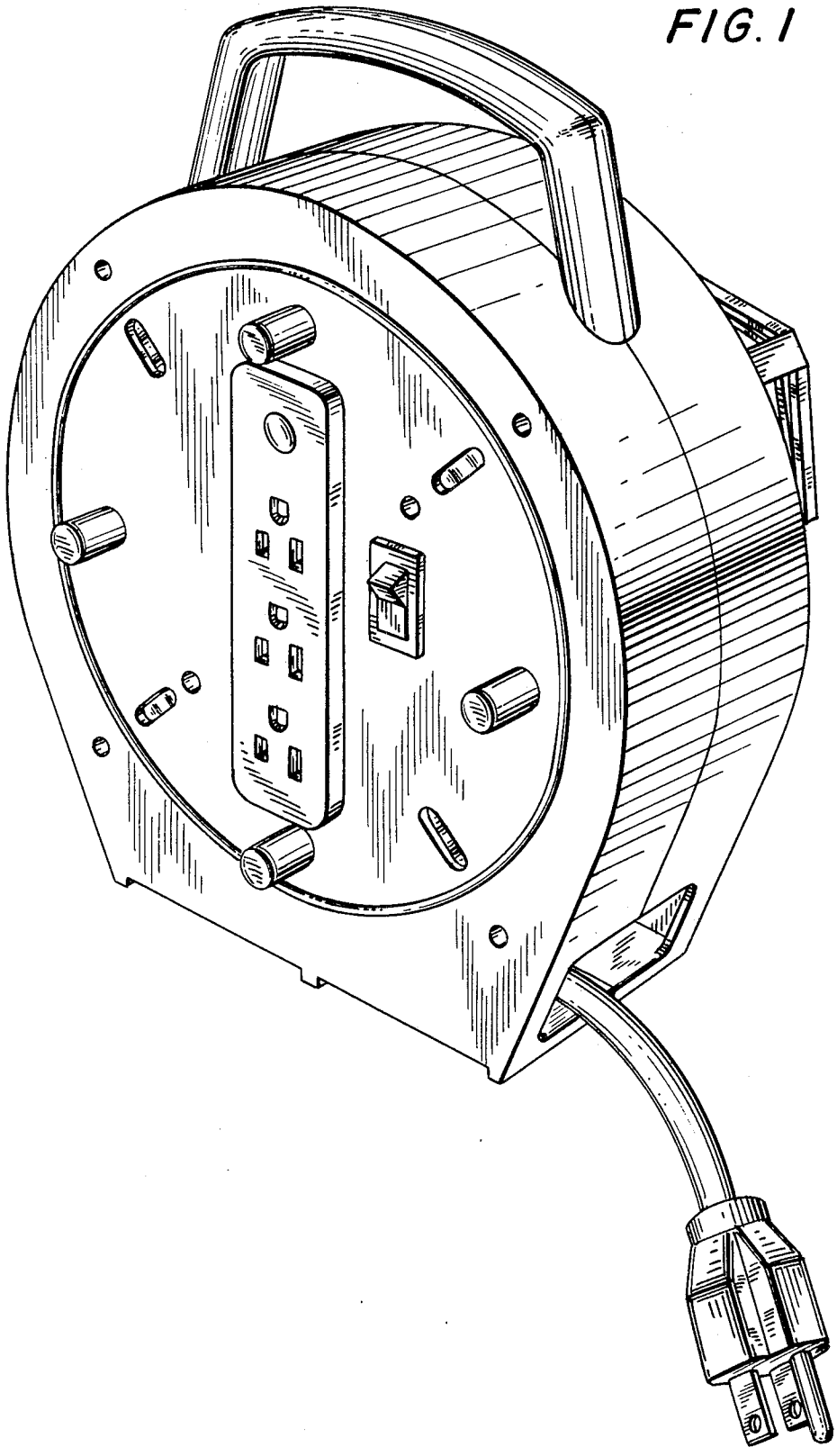

FIG. 3

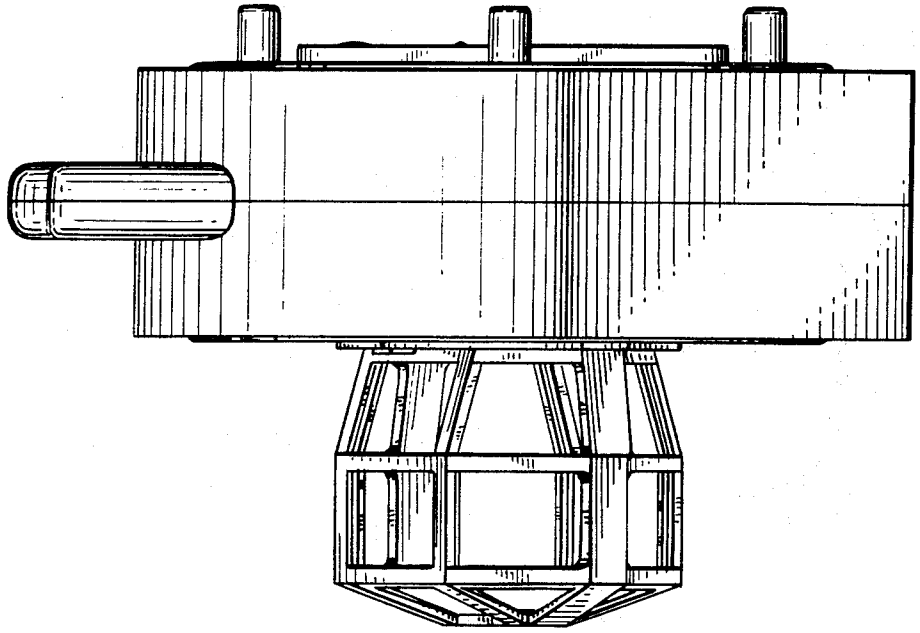

FIG. 2

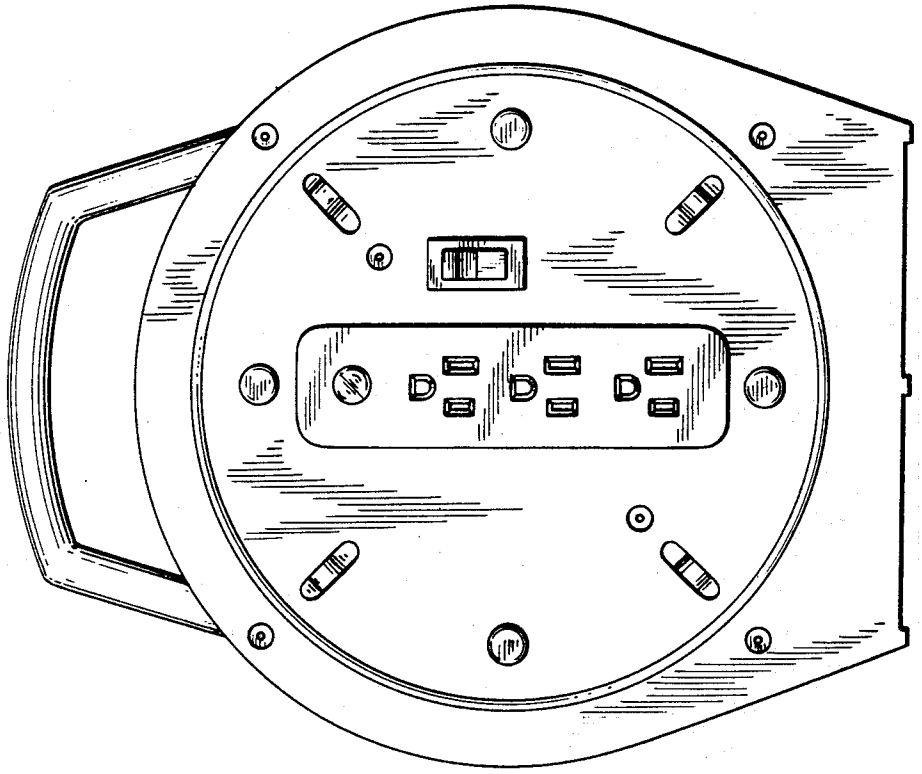

FIG. 5

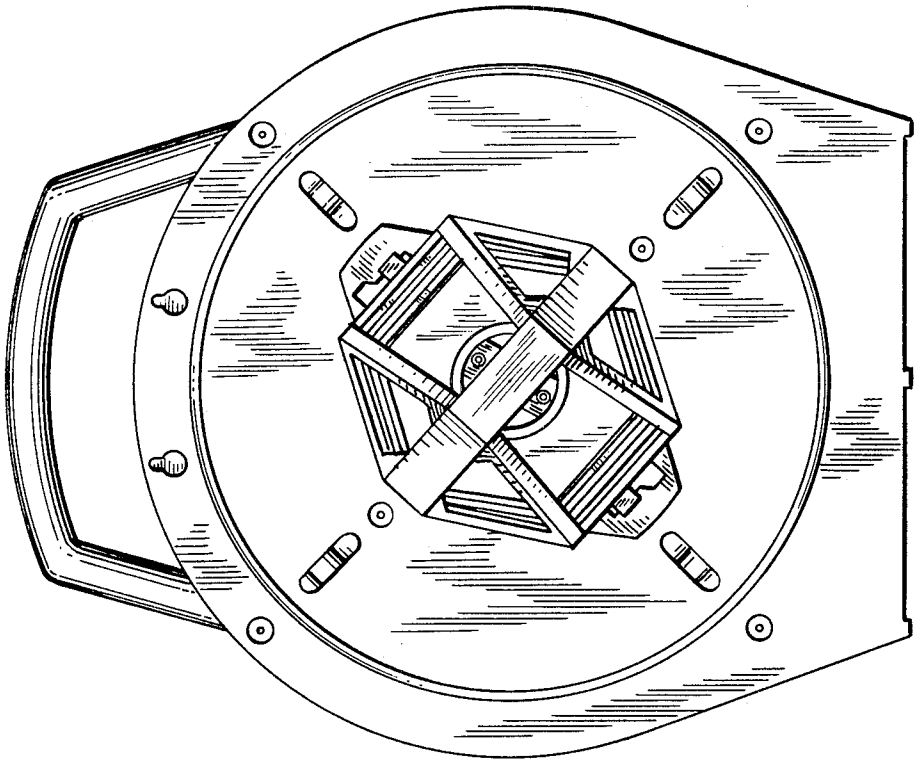

FIG. 4

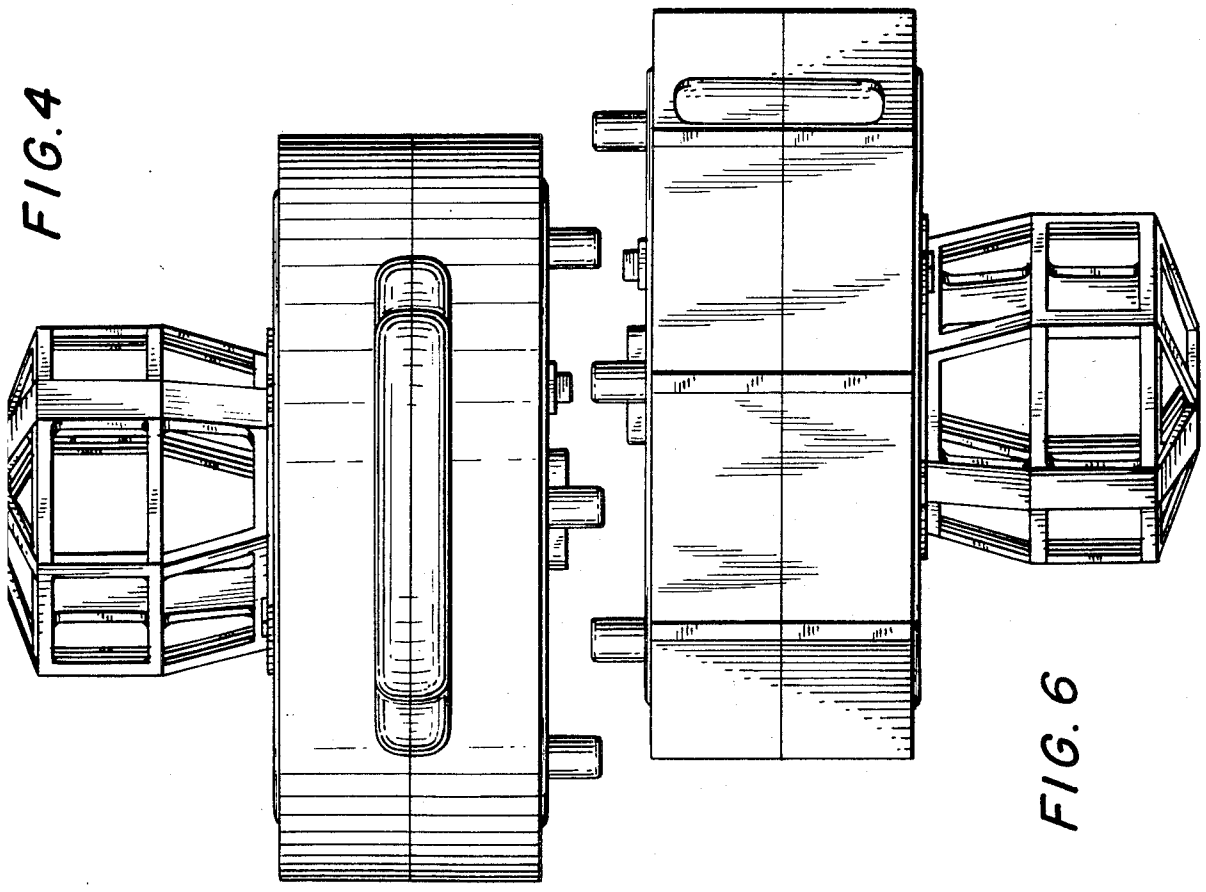

FIG. 6