# United States Patent [19]

**Ollman**

[11] **3,727,360**

[45] **Apr. 17, 1973**


[54] **SPIRAL STAIRCASE**


[75] Inventor: **Melvin L. Ollman,** Detroit, Mich.

[73] Assignee: **C-O, Inc.,** Detroit, Mich.



[22] Filed: **Mar. 22, 1971**

[21] Appl. No.: **126,575**

[52] **U.S. Cl.** .....**52/187,** 52/27, 52/36

[51] **Int. Cl.** .....**E04f 11/02**

[58] **Field of Search**.....52/187, 182, 173, 52/73, 36, 27, 236, 245



[56] **References Cited**

UNITED STATES PATENTS

| | | | |
|---|---|---|---|
| 3,207,259 | 9/1965 | Gebhart | 52/187 |
| 3,418,770 | 12/1968 | Allmand | 52/187 |
| 3,430,729 | 3/1969 | Miceli | 52/187 X |
| 3,465,486 | 9/1969 | Rolin | 52/222 |



*Primary Examiner*—Price C. Faw, Jr.

*Attorney*—Barnes, Kisselle, Raisch & Choate



[57] **ABSTRACT**

A spiral staircase comprising a hollow column having a semi-circular cross section wherein the wall of said column is under tension. A stringer extends in helical fashion in spaced relation to the outer wall of the column and steps or treads extend between the stringer and the column.


**29 Claims, 16 Drawing Figures**

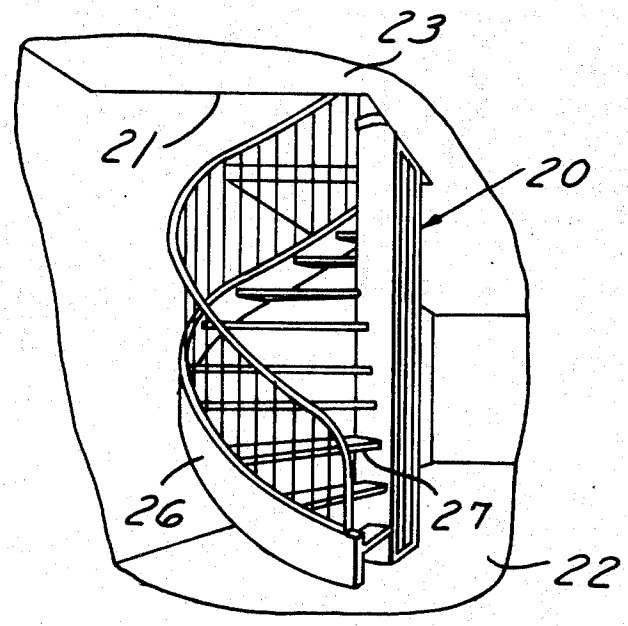

PATENTED APR 17 1973

3,727,360

SHEET 1 OF 5

FIG. 1

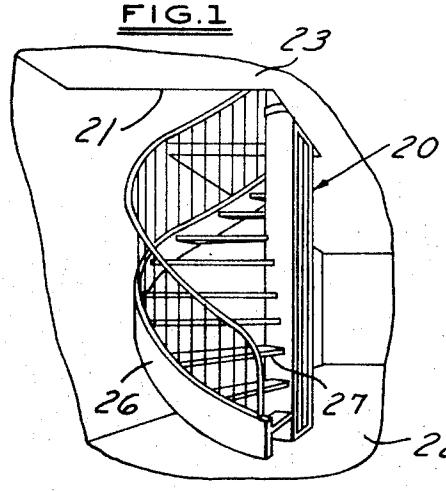


FIG. 4

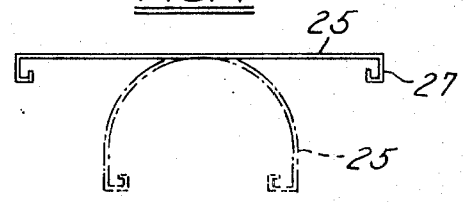


FIG. 2

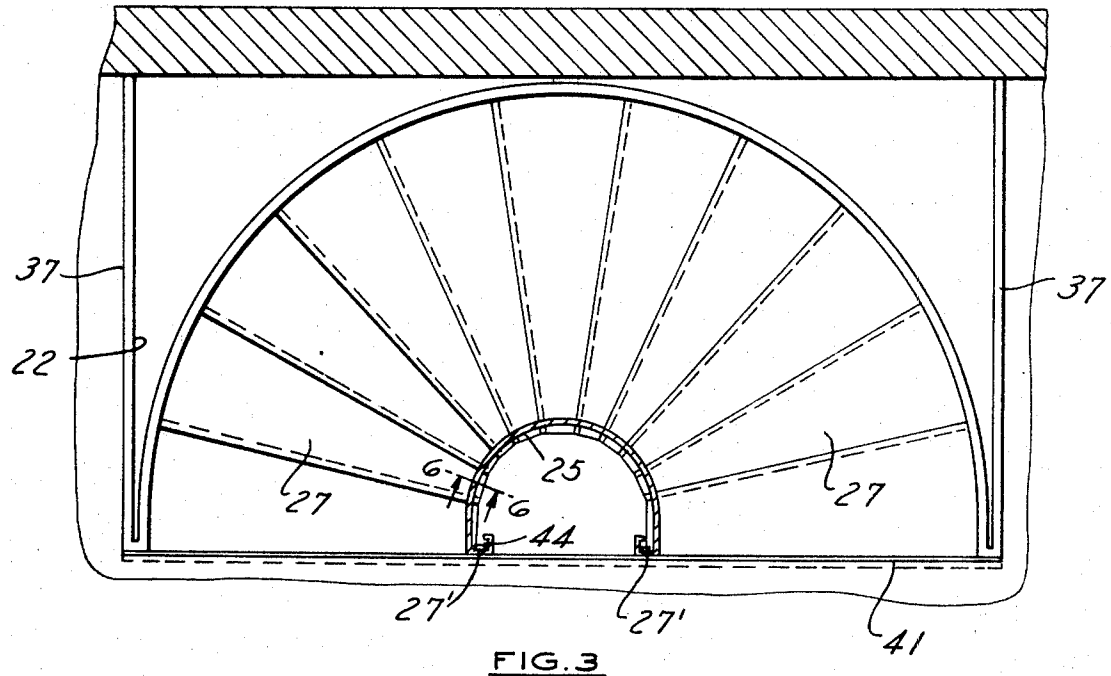


FIG. 3

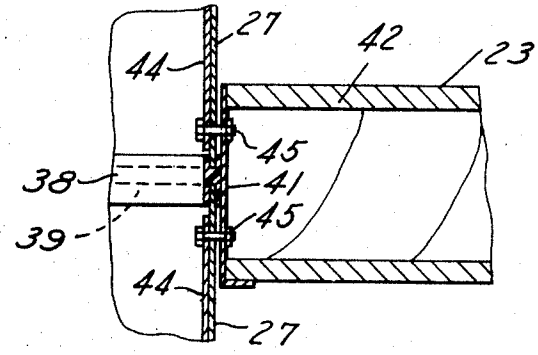


INVENTOR
MELVIN L. OLLMAN
BY Barnes, Kisselle, Raisch & Choate
ATTORNEYS

FIG. 5

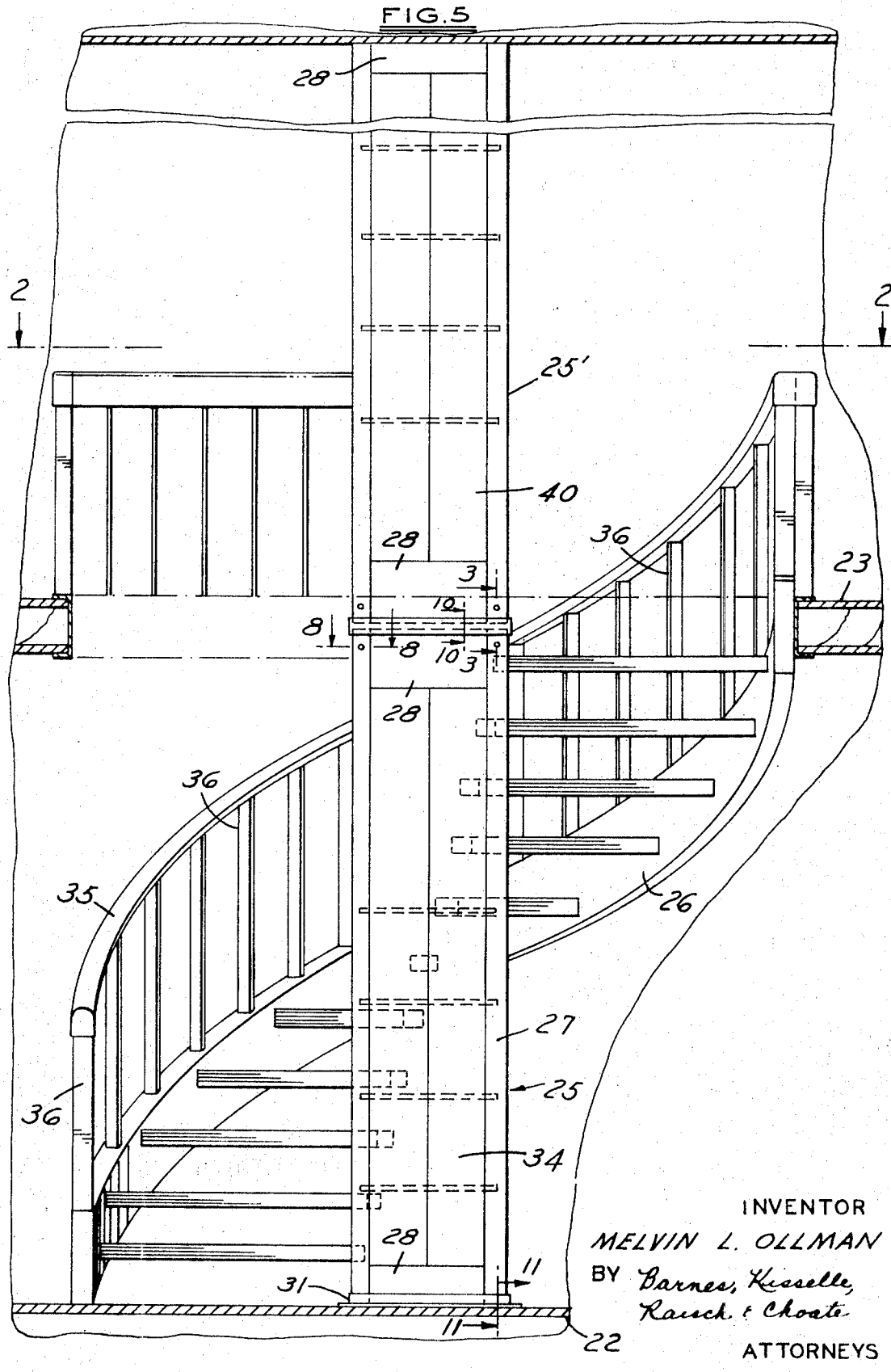


INVENTOR
MELVIN L. OLLMAN
BY Barnes, Kisselle, Raisch & Choate
ATTORNEYS

FIG.6

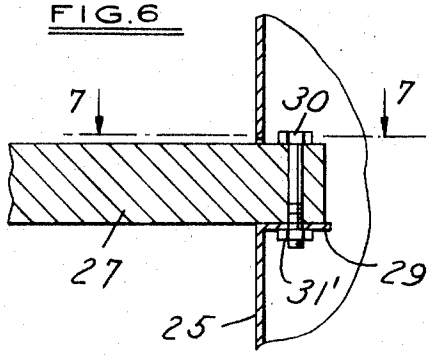


FIG.8

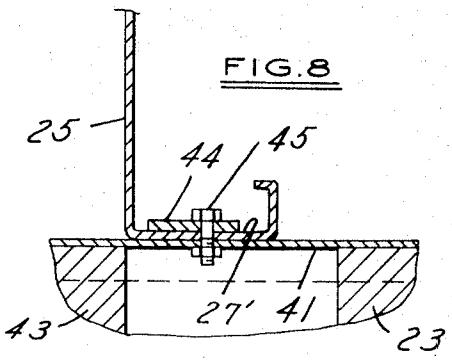


FIG.7

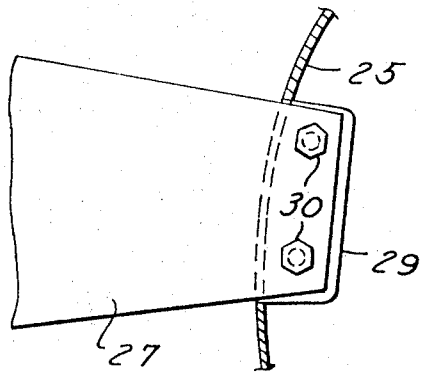


FIG.9

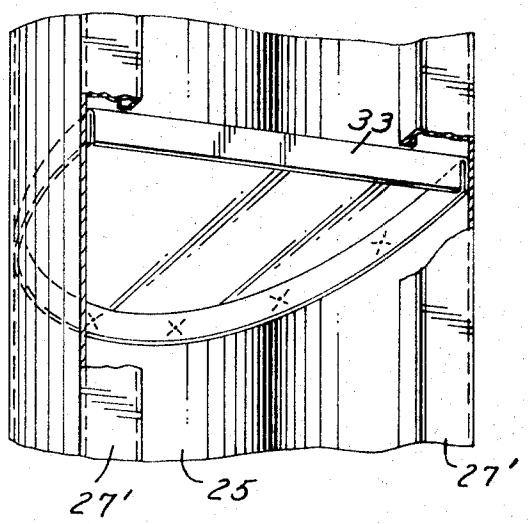


FIG.10

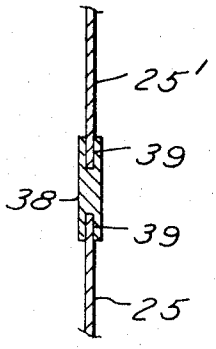


FIG.11

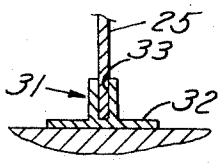


INVENTOR
MELVIN L. OLLMAN
BY
Barnes, Kisselle, Raisch & Choate
ATTORNEYS

FIG.12

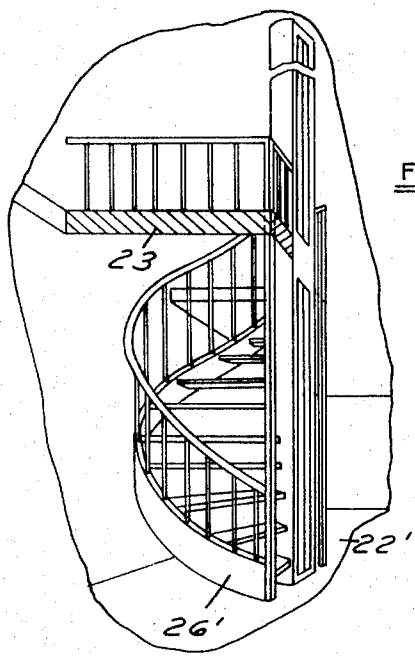


FIG.13

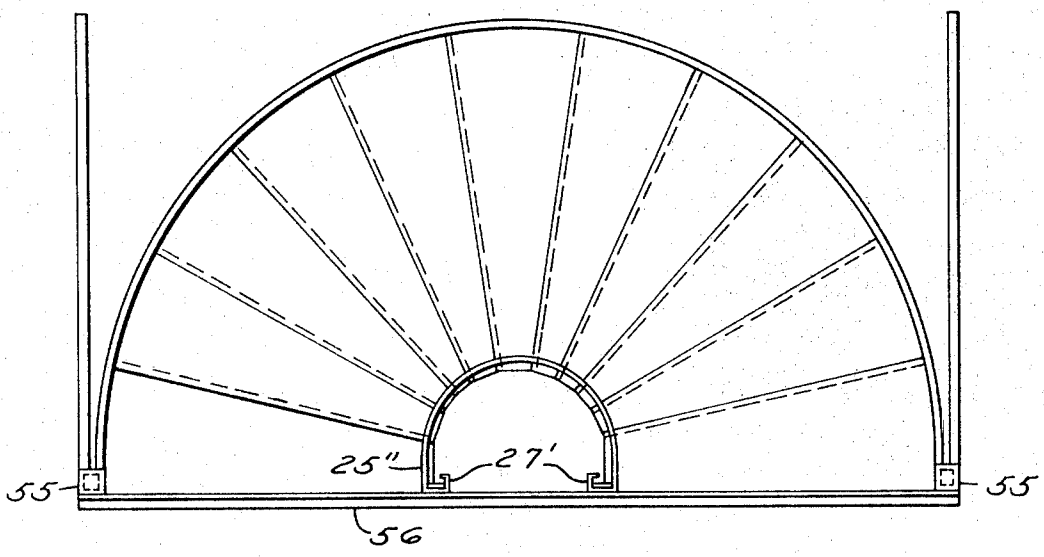


FIG.15

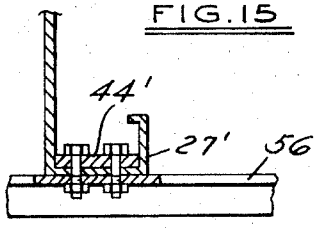


INVENTOR
MELVIN L. OLLMAN
BY
Barnes, Kisselle, Raisch & Choate
ATTORNEYS

FIG. 16

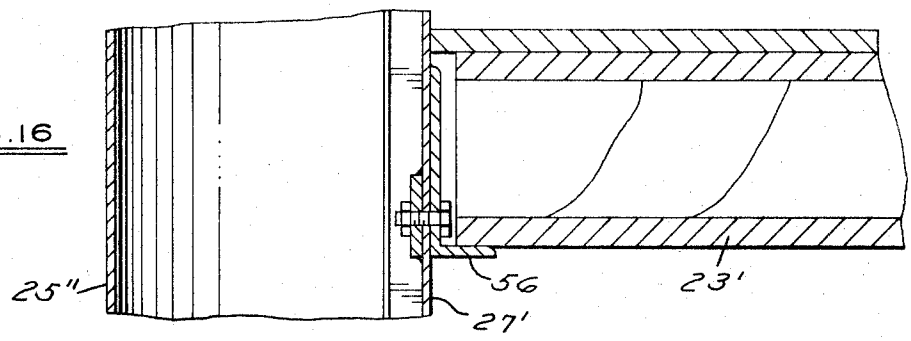


FIG. 14

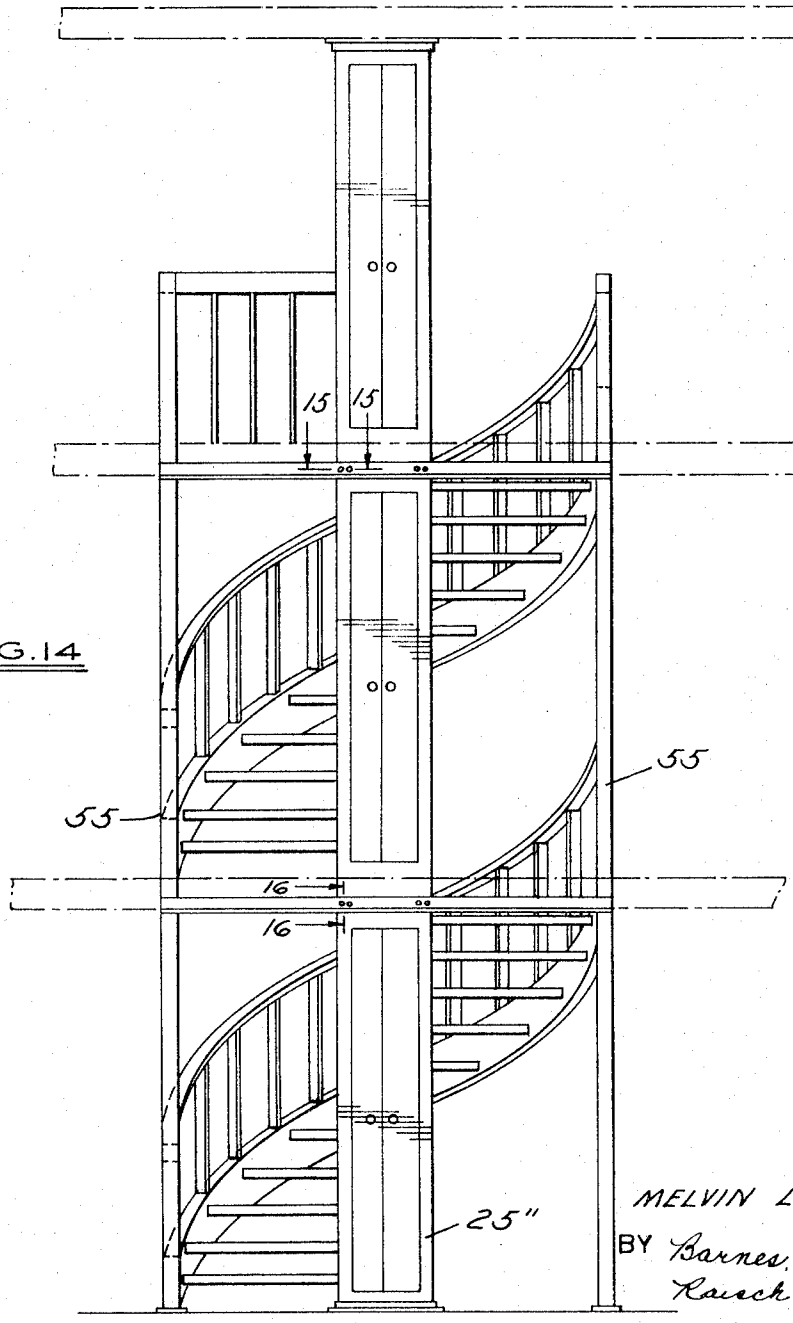


INVENTOR
MELVIN L. OLLMAN
BY Barnes, Kisselle, Raisch & Choate
ATTORNEYS

# SPIRAL STAIRCASE

This invention relates to spiral staircases.

## BACKGROUND OF THE INVENTION

In the manufacture of low cost housing, it is desirable to provide a staircase construction which is low in cost, strong and attractive and yet which can be manufactured away from the job site.

Among the objects of the invention are to provide a spiral staircase construction which is low in cost, strong, attractive and can be fabricated away from the job site for placement in an opening to provide access between floors of a building.

## SUMMARY OF THE INVENTION

A spiral staircase comprising a hollow column having a semi-circular cross section wherein the wall of said column is under tension. A stringer extends in helical fashion in spaced relation to the outer wall of the column and treads extend between the stringer and the column.

## DESCRIPTION OF THE DRAWINGS

FIG. 1 is a fragmentary perspective view of a building incorporating the spiral staircase of the present invention.

FIG. 2 is a fragmentary plan view taken along the line 2—2 in FIG. 5.

FIG. 3 is a fragmentary sectional view taken along the line 3—3 in FIG. 5.

FIG. 4 is a partly diagrammatic view showing a step in the process of making a portion of the stairway.

FIG. 5 is a fragmentary front elevational view.

FIG. 6 is a fragmentary sectional view on an enlarged scale taken along the line 6—6 in FIG. 2.

FIG. 7 is a fragmentary sectional view taken along the line 7—7 in FIG. 6.

FIG. 8 is a fragmentary sectional view on an enlarged scale taken along the line 8—8 in FIG. 5.

FIG. 9 is a fragmentary perspective view of a portion of the staircase.

FIG. 10 is a fragmentary sectional view on an enlarged scale taken along the line 10—10 in FIG. 5.

FIG. 11 is a fragmentary sectional view taken along the line 11—11 in FIG. 5.

FIG. 12 is a fragmentary perspective view of a building incorporating a modified form of the spiral staircase.

FIG. 13 is a plan view of a spiral staircase shown in FIG. 12.

FIG. 14 is a fragmentary front elevational view of the spiral staircase shown in FIG. 1.

FIG. 15 is a fragmentary sectional view on an enlarged scale taken along the line 15—15 in FIG. 14.

FIG. 16 is a fragmentary sectional view on an enlarged scale taken along the line 16—16 in FIG. 14.

## DESCRIPTION

Referring to FIG. 1, the spiral staircase assembly 20 embodying the invention is adapted to be placed in a building which has an opening 21 in the floor 22 thereof that is generally rectangular in order to provide access between the lower floor 22 and the upper floor 23.



As shown in FIG. 1, the staircase comprises a hollow column 25, a stringer 26 and steps or treads 27 extending between the column 25 and the stringer 26.

Referring to FIG. 5, the column 25 comprises a single sheet of metal bent from the flat shape as shown in FIG. 4 to the arcuate semi-circular configuration shown in broken lines in FIG. 4. This places the arcuate wall thus formed under tension providing rigidity and sound-deadening properties. Prior to bending, the ends of the sheet are bent inwardly to form flanges 27'. At various points along the length of the column 25, metal sheets 28, are welded to the flanges 27' to retain the arcuate wall in its tensioned state.

In addition, prior to bending to the arcuate shape, tabs 29 (FIG. 6) are struck out and bent radially inwardly to form supports for the inner ends of the steps or treads 27. The outer ends of the treads 27 extend into and are adhered by adhesive in recesses in the stringer 26, the latter being preferably made of laminated wood. Bolts 30 and nuts 31' fasten the treads on flanges 29.

The lower end of the column 25 is preferably supported on the floor 22 by a bracket 31 which includes a flange 32 and a slot 33 for receiving the lower end of the column 25. Bracket 31 has an arcuate shape corresponding to the shape of the arcuate wall of column 25.

Metal shelves 33 (FIG. 9) are provided at spaced points along the length of the column and are preferably welded thereto to provide storage space and a folding door 34 is hinged to one flange 27' in any well known manner to provide access to the shelves.

A hand rail 35 supported by vertical posts 36 on the stringer 26 extends along the entire length of the stringer which as shown in FIG. 2 is an arcuate extent of about 180°. Further as shown in FIG. 2, protective railings 37 are provided at the sides of the opening 22 above the second floor 23. As shown in FIG. 5, the lower end of the stringer 26 is supported on the floor 22 and the upper end is supported on the floor 23.

Further in accordance with the invention, a second column 25' is prefabricated in a similar fashion to the column 25 and brought onto the job site where it is mounted on the upper end of the column 25 by a mounting flange 38 that has slots 39 for receiving the upper end of the column 25 and the lower end of the column 25'.

A folding door 40 is provided on the column 25'. The lower end of the opening defined by column 25' is open and communicates with the end of the opening defined by column 25 to define a clothes chute.

As shown in FIG. 3, the spiral staircase is preferably fixed in position in the opening 22 by a channel 41 that extends across the front end of the opening 22 and receives the floor plan 42 that defines a portion of the floor 23. Vertically extending plate members 44 along the inner surfaces of the flanges 27' are provided to reinforce the column and to assist it in maintaining proper rigidity. Finally, bolts and nuts 45 extend through the channel 41, flanges 27' , and plate members 44 to fix the upper end of the lower column and the lower end of the upper column with respect to the floor 23.

It can thus be seen that there has been provided a spiral staircase construction that can be assembled sub-

stantially completely away from the job site, moved to the job site and placed in the previously made opening, the only connections that need be made are between the two column portions **25, 25'** and to the floor structure if desired.

It will be readily understood that the additional sections of the spiral staircase can be successively provided one above the other where stairways are needed between more than two floors.

In the form of the invention shown in FIGS. **12–16**, the stringers **26'** are fastened to posts **55** that extend between the floor **22'** and ceiling **23**. The central column **25''** is formed as in the previous form of the invention and an angle member **56** extends between the flanges **27'** and the posts **55** to maintain the spiral staircase in assembled condition. The angle member **56** serves to support portions of the floor.

As in the previous form of the invention, successive units **25** may be placed one upon the other between floors and in such instance, the posts **55** extend throughout the length of the spiral staircase as shown in FIG. **14**. I claim:

**1**. In a prefabricated spiral stairway construction for use in an opening of a floor between floors of a building, the combination comprising
- a central column comprising a substantially imperforate one-piece arcuate wall adapted to extend generally vertically,
- the angular extent of said arcuate wall being not greater than 180°,
- a helical stringer extending about said arcuate wall of said column in spaced relation with said outer surface of the column,
- and a plurality of vertically spaced stair treads having one end thereof connected to said arcuate wall and the other end thereof connected to said stringer,
- and means at longitudinal spaced points along said column connecting the vertical free ends of the said wall.

**2**. The combination set forth in claim **1** wherein said arcuate wall has its outer surface under tension.

**3**. The combination set forth in claim **2** including a railing fixed to said stringer and extending along said stringer.

**4**. The combination set forth in claim **2** wherein said column is made of metal,
- said arcuate wall being formed from a single piece of metal which in its untensioned state has a configuration such that when the wall is bent to the arcuate form, the outer surface thereof is placed under tension.

**5**. The combination set forth in claim **4** wherein said wall is made from a substantially flat piece of sheet metal.

**6**. The combination set forth in claim **4** wherein said wall has tabs struck inwardly therefrom for receiving the ends of said treads.

**7**. The combination set forth in claim **2** wherein each free end of said wall is bent inwardly toward the opposite free end.

**8**. The combination set forth in claim **7** including a reinforcing member along the inwardly bent edge of the end of said wall.

**9**. The combination set forth in claim **1** including a second substantially identical upper column,
- means for mounting said second column on said first lower column so it will extend above the upper floor to which the staircase extends.

**10**. The combination set forth in claim **9** wherein the vertical area between said columns is substantially open,
- an access opening in the second upper column,
- and an access opening in the first lower column whereby material such as clothes can be dropped through from the first column to the second column.

**11**. The combination set forth in claim **1** including means connecting said column to the flooring of a building.

**12**. The combination set forth in claim **1** wherein said arcuate wall is semi-circular in cross section.

**13**. The combination set forth in claim **1** including a plurality of vertically spaced shelves in said column.

**14**. The combination set forth in claim **13** wherein said shelves are made of metal and said column is made of metal, said shelves being welded to said column.

**15**. The combination set forth in claim **1** including a railing fixed to said stringer and extending along said stringer.

**16**. The combination set forth in claim **1** including a plurality of said columns and means for mounting said columns one above the other.

**17**. The combination set forth in claim **1** wherein said arcuate wall comprises a continuously curving outer surface.

**18**. In a prefabricated spiral stairway construction for use in an opening of a floor between floors of a building, the combination comprising
- a central column comprising a substantially imperforate one-piece arcuate wall adapted to extend generally vertically,
- said wall having an arcuate extent of about 180°,
- the angular extent of said arcuate wall being not greater than 180°,
- said arcuate wall having its outer surface under tension,
- a helical stringer extending about said arcuate wall of said column in spaced relation with said outer surface of said column,
- and a plurality of vertically spaced treads having one end thereof connected to said arcuate wall and the other end thereof connected to said stringer,
- and means at longitudinal spaced points along said column connecting the ends of the said wall.

**19**. The combination set forth in claim **18** wherein said column is made of metal,
- said arcuate wall being formed from a single piece of metal which in its untensioned state has a configuration such that when the wall is bent to the arcuate form, the outer surface thereof is placed under tension.

**20**. The combination set forth in claim **19** wherein said wall is made from a substantially flat piece of sheet metal.

**21**. The combination set forth in claim **19** wherein said wall has tabs struck inwardly therefrom for receiving the ends of said treads.

**22**. The combination set forth in claim **19** wherein the free end of each said wall is bent inwardly toward the opposite free end to form a flange.

23. The combination set forth in claim 22 including a second substantially identical upper column,

means for mounting said second upper column on said first lower column so it will extend above the upper floor to which the staircase extends.

24. The combination set forth in claim 23 wherein the area between said columns is substantially open,

an access opening in the second upper column,

and an access opening in the lower column whereby material such as clothes can be dropped through from the first column to the second column.

25. The combination set forth in claim 22 including a reinforcing member along the inwardly bent edge of the flange of said wall.

26. The combination set forth in claim 25 including means for connecting said flange and said reinforcing member to the flooring of a building.

27. The combination set forth in claim 25 including a plurality of vertically spaced shelves in said column.

28. The combination set forth in claim 27 wherein said shelves are made of metal and said columns are made of metal and said shelves are welded to said columns.

29. The combination set forth in claim 18 wherein said arcuate wall comprises a continuously curving outer surface.

* * * * *