March 20, 1945. J. L. S. ROSENBERG 2,372,121

RAZOR SHARPENER

Filed Aug. 19, 1944

Fig. 1.

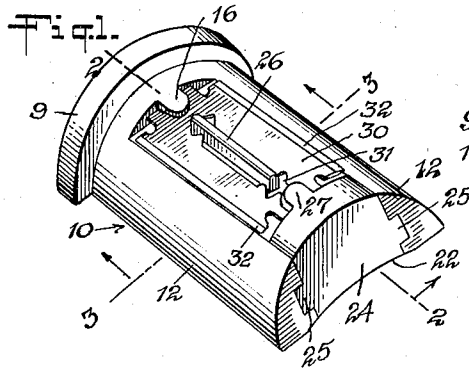

Fig. 4.

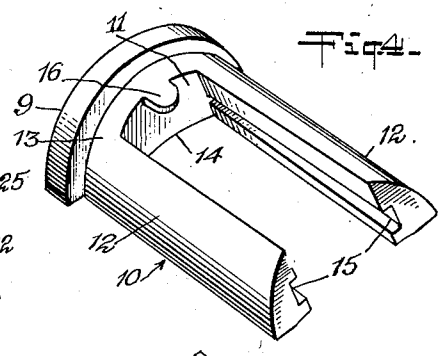

Fig. 5.

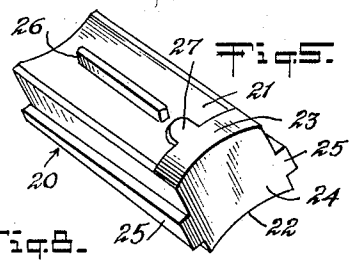

Fig. 2.

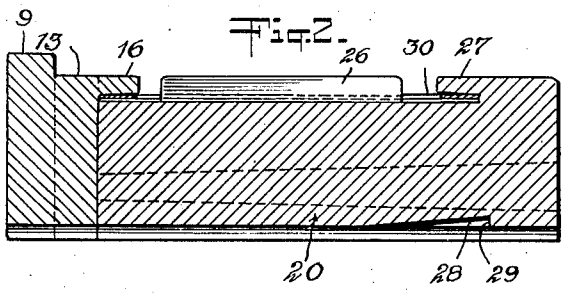

Fig. 8.

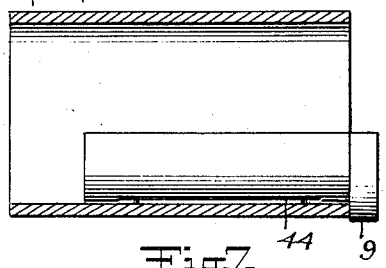

Fig. 3.

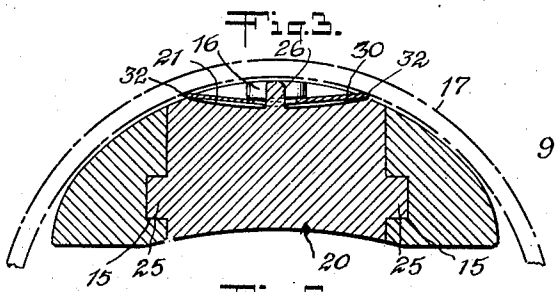

Fig. 7.

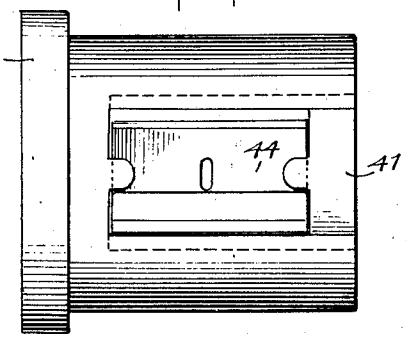

Fig. 6.

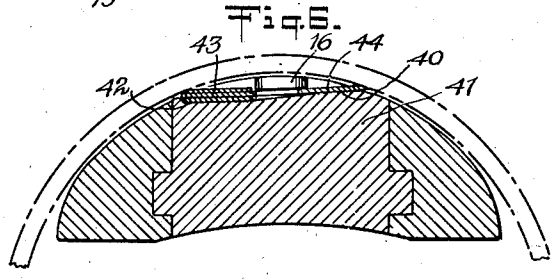

Witnesses
Geo. Maylon

INVENTOR.
Joseph L. S. Rosenberg
BY
Munn, Liddy & Glascum
Attorneys

Patented Mar. 20, 1945 2,372,121

UNITED STATES PATENT OFFICE

2,372,121

RAZOR SHARPENER

Joseph L. S. Rosenberg, Brentwood, N. Y., assignor to Yudell Realty Corporation, Brentwood, N. Y.

Application August 19, 1944, Serial No. 550,159

6 Claims. (Cl. 51—161)

The present invention relates to holders for safety razor blades for use in sharpening said blades by reciprocation against the inner surface of a honing cylinder.

One of its objects is to provide a holder of the type described having interchangeable parts for the accommodation of double-edge and single-edge blades.

Another object is to provide a holder of the type described which automatically holds the blade in proper angular relationship with respect to the inner surface of the honing cylinder.

A further object is the provision of a holder of the type described which is of simple, moldable construction, and which is simple to use and to clean.

Preferred embodiments of the invention are illustrated in the accompanying drawing in which—

Figure 1 is a perspective view of the assembled device, as it appears holding a double-edge blade;

Fig. 2 is a longitudinal section on the line 2—2 of Figure 1;

Fig. 3 is a transverse section on the line 3—3 of Figure 1, showing the device in operable position against the inner surface of a honing cylinder (indicated by the dot-dash lines);

Fig. 4 is a perspective view of the female member of the device;

Fig. 5 is a perspective view of the male member of the device;

Fig. 6 is a view similar to that of Figure 3 showing a male member adapted to accommodate a single-edge blade;

Fig. 7 is a plan view of the device shown in Figure 6; and

Fig. 8 is a sectional view of a honing cylinder in which the sharpening device herein disclosed is disposed, ready for use.

Referring to the embodiment of the invention shown in Figures 1 to 5 inclusive, the holder consists of two unitary parts: a female member 10, shown in Figure 4 and a male member 20, shown in Figure 5.

Female member 10 comprises, substantially, a U-shaped body having a rimmed yoke 11 and a pair of arms 12 integral therewith. The top surface 13 of said member, that is, the top surface of said yoke and arms has a convex curvature, being curved in a single direction to conform, substantially, to the concave curvature of the inner surface of a honing cylinder 17 (represented by the dot-dash lines) said cylinder being of uniform diameter throughout. The under surface 14 of said female member, and more especially of the yoke thereof, is concave, being curved in the same direction as the convex top surface of said member. The flange or rim 9 abuts the rim of the cylinder, as shown in Figure 8, to prevent inward displacement of the device.

A pair of complementary elongated grooves 15 is formed in the inner surfaces of said arms, longitudinally thereof, said grooves tapering uniformly from relatively small proportions as they approach the yoke. The function of these grooves will shortly appear. A small lug 16 is formed on said yoke, projecting longitudinally therefrom, midway between said arms.

Male member 20 comprises an elongated unit that fits snugly between arms 12, its length corresponding to the length of said arms, its width corresponding to the distance separating said arms. Its upper surface 21 and its under surface 22 are concave, the concavity of the latter corresponding to the curvature of under surface 16 of the yoke. A raised portion 23 at the outer end 24 of said male member, has a convex surface corresponding to the curvature of the top surface 13 of said female member. Said outer end 24 has the same shape and dimensions as has yoke 11, exclusive of rim 9.

Male member 20 has a pair of complementary elongated tongues 25 formed on its side surfaces, said tongues tapering uniformly from larger to smaller proportions in the direction away from said outer end 24. These tongues are of size and shape to fit tightly in grooves 15 when fully inserted therein. The tongues are so situated on male member 20 that when the latter is joined with the female member as aforesaid, the top surface of said raised portion 23 meets the curved upper surfaces of arms 12 in a continuous, unbroken curve.

An elongated raised portion or ridge 26 is formed on the upper surface 21 of said male member, longitudinally thereof, and midway between the side edges thereof. The function of said ridge will hereinafter appear. A small lug 27 corresponding in all respects to lug 16 projects longitudinally from raised portion 23 in the direction of said lug 16. The function of said lugs will hereinafter appear. A small depression 28 is formed in the under surface 22 of said male member ending abruptly at shoulder 29. The function of said shoulder will shortly appear.

To use the device, a double-edge blade 30 is placed on the male member in such manner that

one of the ends of said blade is caused to slip under lug 27 and ridge 26 is caused to project through aperture 31 formed in said blade. The male member is now joined with the female member, and the opposite end of the blade caused to slip under lug 16. As will be seen in Figure 3, lugs 16 and 27 caused the blade to assume the curvature of upper surface 21 of the male member. The holder is now inserted into cylinder 17 as shown in Figure 8 and the sharpening operation is ready to begin. The fingers of the user are placed against the concave under-surface of the holder, or more specifically, of the male member thereof, and the holder is caused to reciprocate from side to side on an axis which is in alignment with the axis of the cylinder. It will be seen in Figure 3 that the cutting edges 32 of the blade extend slightly above the top of the male member. This provides direct contact between cylinder and blade. It should be noted that the relation between the lugs 16 and 27 on the one hand and the top curvature of the male member on the other, provides for correct angular contact between said blade and said cylinder, for sharpening purposes. The ridge prevents lateral displacement of the blade during the sharpening operation. When it is desired to remove the blade to sharpen its other side, or to remove it when the sharpening operation is completed, the user slips his finger nail into depression 28 and against shoulder 29 and slides the male member out of the female member.

In Figures 6 and 7 a modified embodiment of the invention is shown. The top surface 40 of male member 41 has a longitudinal recess 42 formed in it along one of its side edges. The purpose of this recess is to accommodate the heavy, non-cutting edge 43 of a single-edge blade 44. There is no raised portion or ridge on the top surface of male member 41 corresponding to ridge 26 on male member 20. Male member 41 is otherwise substantially identical with male member 20 and may be used interchangeably therewith in female member 10. This embodiment may be used in the same manner as the embodiment shown in Figures 1 to 5 inclusive.

Both embodiments are made, preferably, of plastic material and each member thereof may be molded into form in a single operation.

Modifications of the invention may be had without departing from the basic principles thereof. These modifications are herein contemplated.

I claim:

1. In combination with a honing cylinder, a safety razor blade holder for sharpening safety razor blades by reciprocatory action against the inner surface of said cylinder, said holder having a convex upper surface corresponding, substantially, to the concave inner surface of said cylinder, and having a recess formed in said upper surface adapted to carry the blade, when in flexed condition, in proper angular position with respect to said inner surface of the cylinder, and having locking means adapted to lock said blade in such flexed condition in said recess.

2. A safety razor blade holder of the character described, comprising a male and a female member adapted to be joined by a tongue and groove construction, said members, when joined, having a convex upper surface corresponding to the concave inner surface of a honing cylinder, and a concave undersurface adapted to receive the fingers of the user and to prevent them from slipping off the holder when in use, said male member having a recess formed in its upper surface adapted to carry the blade, when in flexed condition, in proper angular position with respect to the inner surface of said cylinder, said male member and said female member having each a lug connected therewith, adapted, jointly, to lock said blade in such flexed condition, in said recess.

3. A holder in accordance with claim 2 in which the recess is adapted to receive a double-edge centrally slotted blade, said recess having a concave surface and having an elongated ridge formed in the center thereof, longitudinally thereof, said ridge being adapted for introduction into the slot of said blade.

4. A holder in accordance with claim 2 in which the recess is adapted to receive a single-edge blade having the usual enlarged edge opposite the cutting edge, said recess having a longitudinal depression adapted to receive said enlarged edge.

5. A holder in accordance with claim 2 whose female member is provided with an outwardly extending flange for abutting the edge of the honing cylinder to prevent inward displacement of said holder.

6. A safety razor blade sharpening device comprising a cylinder having an inner honing surface and a blade holder in accordance with claim 2.

JOSEPH L. S. ROSENBERG.