G. W. DONNING.

WORK HOLDER FOR FLAT PLATENS.

APPLICATION FILED FEB. 10, 1903.

929,837. Patented Aug. 3, 1909.

2 SHEETS—SHEET 1.

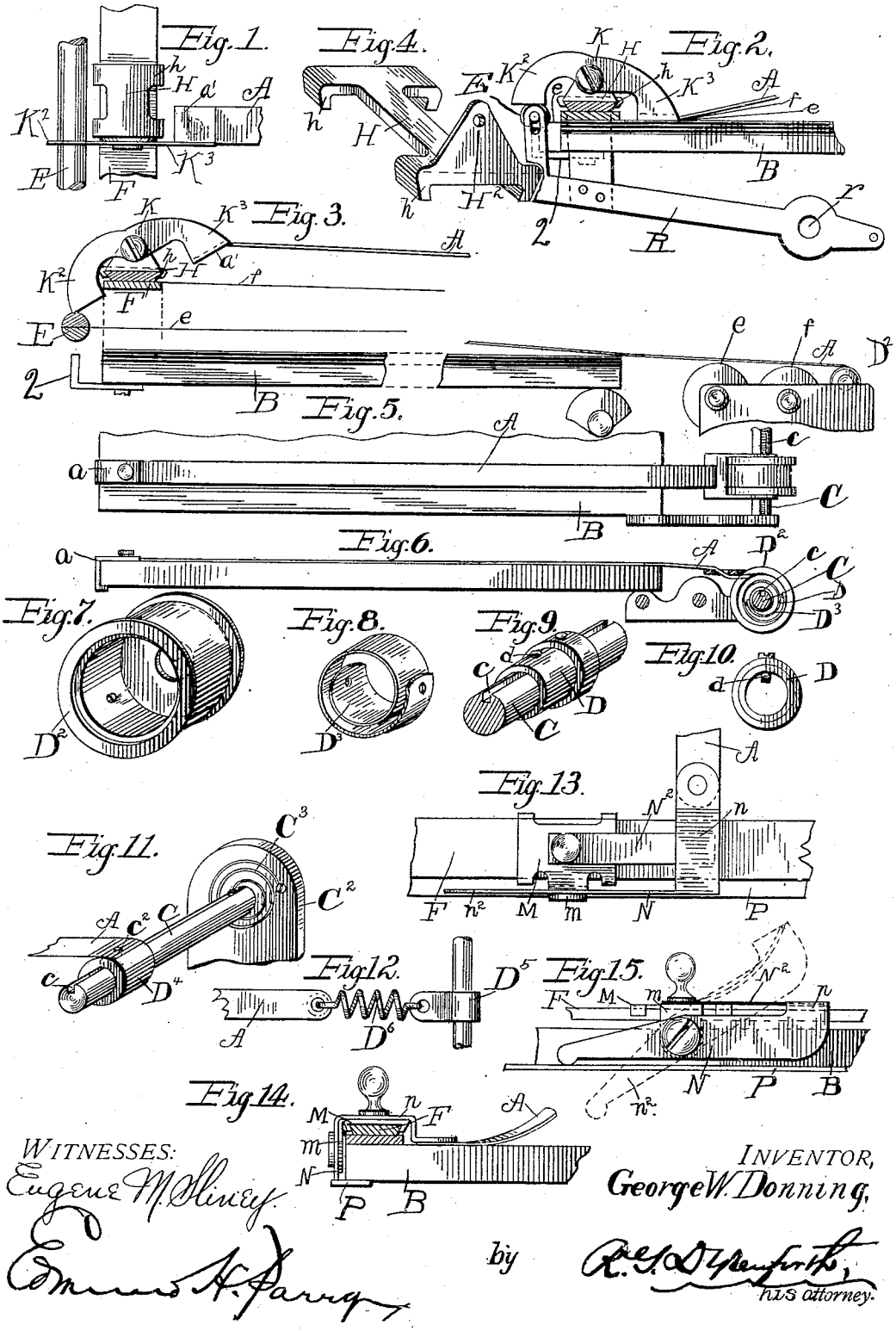

WITNESSES:

Eugene M. Sliney

Edmund H. Parry

INVENTOR,

George W. Donning,

by R. G. Dyrenforth,

his attorney.

G. W. DONNING.

WORK HOLDER FOR FLAT PLATENS.

APPLICATION FILED FEB. 10, 1903.

929,837.

Patented Aug. 3, 1909.

2 SHEETS—SHEET 2.

Fig. 2.

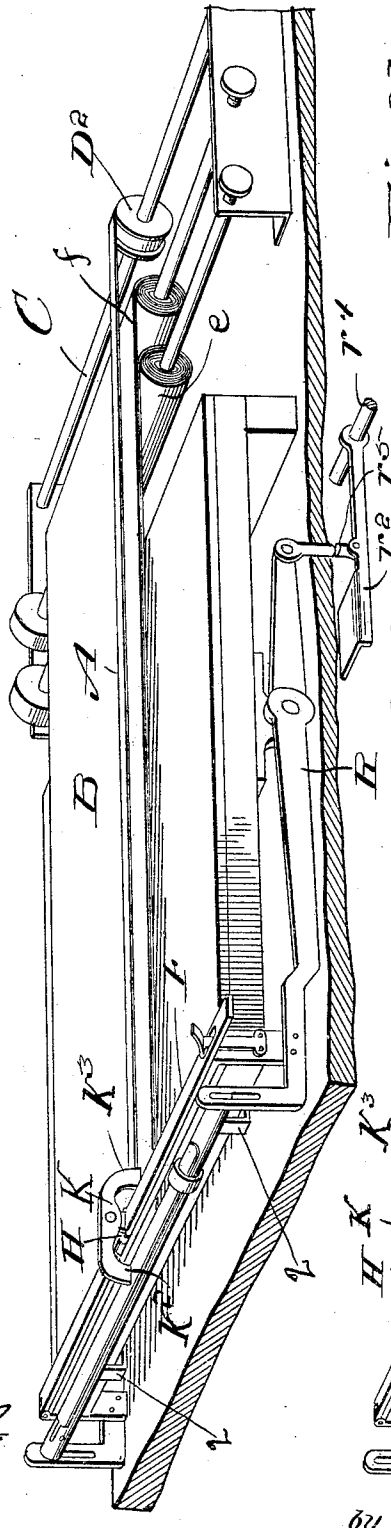

Fig. 2ª.

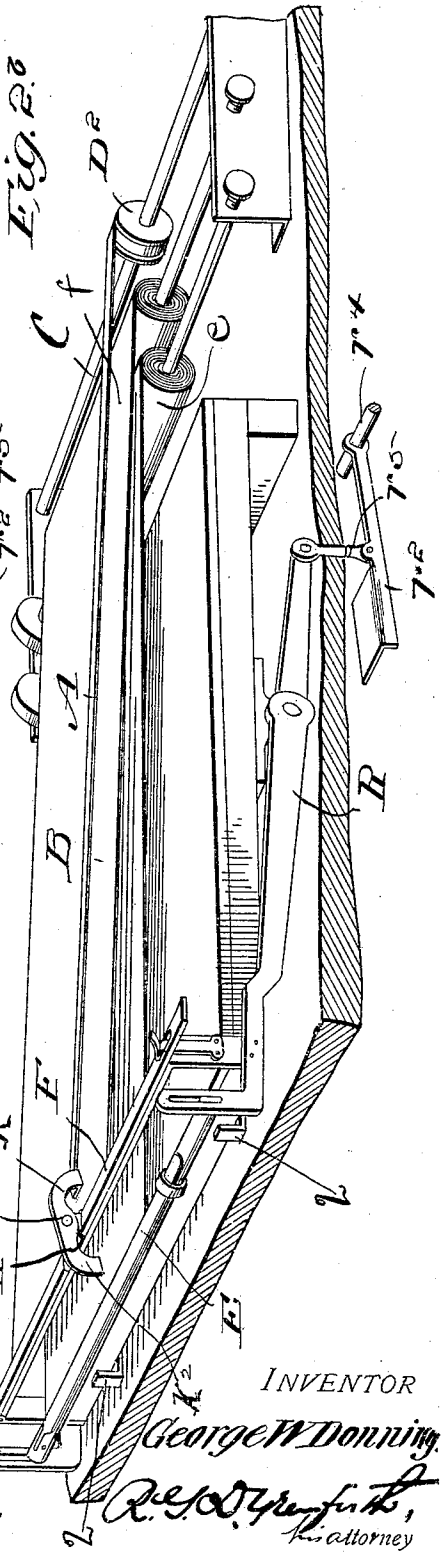

WITNESSES:

INVENTOR

George W. Donning.

by R. S. Greenfield, his attorney

UNITED STATES PATENT OFFICE.

GEORGE W. DONNING, OF EAST ORANGE, NEW JERSEY, ASSIGNOR TO HARRY T. AMBROSE, OF ORANGE, NEW JERSEY.

WORK-HOLDER FOR FLAT PLATENS.

No. 929,837. Specification of Letters Patent. Patented Aug. 3, 1909.

Application filed February 10, 1903. Serial No. 142,788.

To all whom it may concern:

Be it known that I, GEORGE W. DONNING, a citizen of the United States, residing at East Orange, in the county of Essex and State of New Jersey, have invented certain new and useful Improvements in Work-Holders for Flat Platens; and I do hereby declare the following to be a full, clear, and exact description of the invention, such as will enable others skilled in the art to which it appertains to make and use the same.

The object of this invention is to provide a form of work-holder for securing or retaining the sheet or sheets, especially at their margins or side edges, to a flat platen or writing-surface, such as is used in book-typewriters or autograph machines; that can be raised at either or both ends, and which can be shifted bodily across the platen and secured under tension, in the various positions of adjustment.

A further object is to provide, in combination with means for raising the carbon sheet or sheets, means for automatically raising the work-holder above the platen and also above the upper carbon sheet and work carried upon it when raised, so as to readily insert the work, and for also returning the work-holder onto the work when the carbon sheets are lowered.

Heretofore, where the sheet of paper is narrower than the space between the track-rails, it has been customary to shift one or both of the rails toward the middle of the platen, until they engage the side margins of the sheet.

With these objects in view, and others, my invention comprehends the construction, arrangement, and combination of parts hereinafter set forth, with reference to the drawings, and then particularly pointed out in the claims.

In the drawings, representing mechanism embodying my invention in my preferred form of construction and arrangement: Figure 1 is a plan view of the automatic means for raising the band from the platen; Fig. 2 is an elevation of the latter means; Fig. 2^a is a view in perspective, illustrating, more clearly, the device of Fig. 2, the same being shown in its normal position; Fig. 2^b is a similar view, showing the parts in the positions assumed by them when actuated; Fig. 3 shows the same in raised position; Fig. 4 is a perspective view of a slidable support; Fig. 5 is a plan view of a modification of the band and supporting means; Fig. 6 is an elevation of the latter means and showing a tape-guide supplied to the spool, the carbon or paper rolls being omitted; Figs. 7, 8, 9 and 10 show enlarged details of the same; Fig. 11 shows another form of resilient supporting means; Fig. 12 shows still another form of resilient supporting means; Fig. 13 shows in plan another form of automatic lifting means for raising the band; and Fig. 14 is an end view and Fig. 15 a side view of the same.

Referring to the drawings, in which the characters of reference indicate corresponding parts, a band A, preferably of flexible material, such as a textile tape, is supported so as to extend across the platen B, preferably longitudinally, and has a resilient connection at one extremity, that is made shiftable transversely to the length of the band. On a supporting rod C slides a sleeve D, that is prevented from rotating thereon by a pin d engaging the walls of a slot c in the rod C. A spool or drum D^2 surrounds the sleeve D, and is connected therewith by an evolute spring D^3. The band A has one end secured to the drum D^2. At its other end is secured a clip a, arranged to engage the end of the platen. The band is so secured to the spool as to pass partly around it, and, when the clip a is engaging the platen, as shown in Fig. 6, the spring D^3 is put under tension, and the clip and band retained in engagement with the platen, since the drum D^2 lies below the normal plane of the top of the platen. When a sheet is to be positioned on the platen, the band is loosened by drawing the clip away from the end of the platen, and then raising it. The paper being placed in position and one edge being clamped by the usual side clamps, the band-tension device is slid along the rod C until the drum is in alinement with the place it is desired to secure the sheet; and then the band is drawn taut and the clip adjusted in proper position along the end of the platen. The spring D will maintain the band in this position under tension, and retain the sheet in position.

Instead of the tension device above set forth, the slotted rod C may rotate in its support C^2 and be connected therewith by an evolute spring C^3. A collar D^4 slides on the rod C, but is prevented from rotating

thereon by a pin c^2, engaging the slot in the rod, as shown in Fig. 11. The band A is wound partly around the collar D^4, and secured thereto, so that, when the band has its clip engaging the end of the platen, the spring C^3 will be under tension.

Another form of tension device is shown in Fig. 12. The slot is omitted from the rod C, and a simple sleeve D^5 slides thereon. A helical spring D^6 connects this sleeve and the band A, which will keep the band under tension when the same is in position on the platen.

In an application for U. S. patent, filed by me on February 10, 1903, having Serial No. 142,787, I have shown means for supporting sheets of carbon paper and for raising them above the platen, separated, as shown in Figs. 1, 2 and 3; one sheet of carbon c being attached to a holder rod E, which is supported in normal position in any appropriate manner, as by the projecting members 2, secured to the platen, if desired, as shown in Figs. 2, 2^a, and 2^b. Another sheet of carbon f is attached to a holder bar F. In the said application, means are disclosed whereby the carbon-holding members E and F are raised from the position shown in Fig. 2, where they are in contact with the table, to the position shown in Fig. 3, in which the sheets are separated, readily to insert the work. The said foot-treadle r^2 is fulcrumed at r^3 to a fulcrum-plate r^4, and a rod r^5 connects the treadle with the lever R. It is to be understood that, by this means, I am enabled to depress the treadle with the foot to a great or small degree to raise, with certainty, the band and carbon sheets from the platen to any desired or predetermined position. On the bar F is mounted a slide H, having lips h arranged to engage the bar and cause it to be slidably held thereon. The slide H has a lug H^2, to which is pivoted a lever K, having bent portions K^2, K^3. The band A is attached, in this instance, by means of a small plate a' to the arm K^3, its other end being secured, preferably, by a tension device, such as hereinbefore set forth. Now, when the bar F is raised to the position shown in Fig. 3, the lever K is retained in the position there shown, with its edge K^5 in a line joining the axis of the lever K, with the other end of the platen (see Fig. 3), by reason of the pull or tension caused by the spring-drum D^2 and the band will be raised above the upper carbon sheet until the point of connection of the flexible tape with the arm K^3 lines up between the pivotal point of the arm K and the spring-drum. But, on the bar F being lowered onto the platen, the arm K^2 of the lever will strike the rod E, and its end K^3 will be moved to bring the band A down onto the table, on top of the carbon sheets, as shown in Fig. 2. Where the sheet e is omitted and but the one carbon sheet f used, the bar E is held stationary in the position shown in Fig. 2; or the bar E may be a shiftable portion of the base.

From the foregoing, it will be understood that, since the member carrying the tape at one end can be adjusted in various positions transversely across the platen, and also the other end carried by the tension device can be shifted in a direction parallel with the said path of movement, the band can thus be shifted, bodily, to various longitudinal positions; and in each position will be automatically raised and lowered by the carbon sheet operating means; while the tape will, in all of the various longitudinal and vertical positions, be kept under tension by the tension device.

In Figs. 5 and 6, I have illustrated a band-guiding device S, disposed contiguous to the band-tensioning-device and carried by the rod C, and preferably being yoked to present two rearwardly-extending members s, s^2, and being provided with a slot s^3 through which the band A passes. This device S guides the band when the same is drawn forward to rotate the drum. The drum D^2, itself, is provided, on its periphery, with flanges d^2 which constitute guides for the band, and coöperate with the guiding-device S to keep the band properly on the drum.

Where but a single sheet of carbon is used, as shown in Fig. 14, I arrange a slide M movable on the bar F. This slide has a lug m, to which is pivoted a lever N, that has an arm n bent up over the bar F, and then down onto the surface of the platen, when the lever is in the normal position, as shown in full lines in Figs. 14 and 15. To the arm n is secured the end of the band A. The other end n^2 of the arm is arranged to engage a portion P of the platen of the machine. When the bar F is raised carrying the lever N, up with it, a plate-spring N^2 secured to the slide M, and to the arm n, serves to rock the lever N to the position indicated in broken lines in Fig. 14, thus raising the band so that the writing sheet and the carbon copy sheet can be readily inserted. But, when the bar F is returned to the normal position on the platen, the bar n^2 will strike the portion P, and thereby rock the lever and return it to its former position with the band held against the platen, where it will be retained. It will be noticed that the latter automatic band and carbon sheet device is independent of any tension exerted on the band, being controlled by the flat spring N^2; although I preferably employ, also, a tension device to hold the tape more securely against the platen. Instead of the tension devices hereinbefore set forth, the band A can be composed in whole or in part of an elastic material, such as india rubber, or an elastic fabric. In such an ar-

rangement, the band can be secured to the slidable sleeve D^5, shown in Fig. 12.

While I preferably make the band A of flexible material, it could be formed of a rigid substance, of either metal, wood, or hard rubber, for the portion of it that engages the platen, at least; while the portion engaging the drum would have to be flexible, where such latter device was used as part of the tension-device. But, where a helical spring is used, as shown in Fig. 12, the band could be wholly of rigid material.

While I have herein illustrated my invention as applied to a writing-mechanism wherein the platen or impression surface is hinged upon a support and normally standing a short distance above the surface of the supporting-table, yet it is to be understood that the platen, itself, may, in fact, constitute the table-top and thus form the base or support for the writing-mechanism. The flexible band A is automatically raised, with reference to the carbon, by the spring N^2, in Fig. 13, and by the natural pull of the tape when constructed as shown in Figs. 1 and 2. It is lowered to normal position in the manner already described.

Without limiting myself to the details of construction and arrangement hereinbefore set forth, what I claim as new and desire to claim is:

1. The combination with a flat platen or bed, of a carbon sheet holder at one end of the platen, means for raising the holder, of a band extending across the platen from said end, and means for automatically raising the band when the said holder is raised, substantially as described.

2. The combination with a flat platen or bed, of a carbon-sheet holder at one end of the platen, means for raising the holder, a band extending across the platen, a rocker-element with which one end of the band engages, and means for operating the rocker-element, substantially as described.

3. The combination with a flat platen or bed, of a carbon-sheet holder at one end of the platen, means for raising the holder, a band extending across the platen, a tension-device with which one end of said band connects, a rocker-element with which the opposite end of the band engages, and means for rocking the rocker-element, substantially as described.

4. The combination with a flat platen, of a carbon-sheet holder at one end of the platen, a rocker-element comprising two members, a band connecting with one of said members and normally in engagement with the platen, and means coöperating with the band and constructed and arranged to effect a raising of said band away from the platen, substantially as described.

5. The combination with a flat platen or bed, of a carbon sheet holder at one end of the platen, means for raising the holder, a band extending across the platen from said end, means for automatically raising the band when said holder is raised, and means for automatically lowering the band when the holder is lowered, substantially as described.

6. The combination with a flat platen, of a carbon-holder at one end of the platen, means for raising the holder, a member shiftable on said holder and along that end of the platen, a band connecting with said member, and means for rocking said shiftable member to raise and lower one end of the band, substantially as described.

7. The combination with a flat platen, of a carbon-sheet holder, a carbon-sheet held thereby, means for raising the holder and carbon, a band extending across the platen, a movable member with which the band connects and constructed, when in one position, to hold and position the band against the platen and, when in another position, to raise the band away from the platen and above the carbon-sheet, substantially as described.

8. The combination with a flat platen or bed, of a plurality of holders for superposed carbon sheets at one end of the platen, a band extending across the platen from said end, and means for raising one end of the band and carbon sheets from the platen to positions in which the band and sheets lie in different planes, substantially as described.

9. The combination with a flat bed or platen, of a plurality of holders for superposed carbon sheets at one end of the platen, a band attached to one of said holders and extending across the platen from said end, means for raising the holders to different positions in which the carbon sheets lie in different planes, and means for automatically raising the band when the carbon holders are raised to a position above the said raised positions of the carbon sheets, substantially as described.

10. The combination with a flat platen or bed, of a carbon sheet holder at one end of the platen, means for raising the holder, a member shiftable on said holder along that end of the platen, a lever pivoted on said member, a band secured to one end of said lever and arranged to extend across the platen from the positions of said member on said holder, a tension device connected to the other end of the band, and shiftable across the opposite end of the platen, the lever and tension device being arranged to raise the band from the platen and carbon sheet when the said holder is raised, and a stop arranged to engage the other end of said lever when the holder is lowered onto the platen and thereby rock the lever and retain it with the band engaging the platen, substantially as described.

11. The combination with a flat platen or bed, of a pair of carbon-holders at one end of the platen, means for raising the holder, a member shiftable on one of said holders along the end of the platen, a lever pivoted on said member, a band secured to one end of said lever and arranged to extend across the platen from the position of said member on said holder, a tension device connected to the other end of the band and shiftable across the other end of the platen, the lever and tension device being arranged to raise the band from the platen and carbon sheet when the holder is raised, said second carbon-holder being arranged to engage the other end of said lever when the holders are lowered onto the platen and thereby rock the lever and retain it with the hand engaging the platen, substantially as described.

12. The combination with a flat-platen, of a work-confining band, pivoted holding-means at one end of the band, means for rocking said holding means, and means for the vertically moving, simultaneously, the holding-means and one end of the band, substantially as described.

13. The combination with a flat platen, of a laterally-adjustable work-confining band, holding means at one end of the said band, means for rocking said holding means from the platen, and means for effecting vertical movement of the holding means and one end of the band, substantially as described.

14. The combination with a flat platen, of laterally-movable work-confining band, means for vertically moving one end of the band, means for limiting the vertical movement of said band, laterally-movable means for holding the opposite end of said band, and means carried by said band-holding means for tensioning the band, substantially as described.

15. The combination with a flat platen, of a work-confining band, a holding member at one end of said band, means for actuating said holding member, means for vertically elevating the holding member and one end of the band, a laterally-movable holding member at the opposite end of the band, and a tension device connecting with said member, substantially as described.

16. The combination with a flat platen, of a laterally-adjustable work-holding band, means for effecting vertical movement of one end of the band, a laterally-adjustable holding member at the opposite end of the band, guiding flanges formed on said member, and an independent guiding device engaging the band, substantially as described.

17. The combination with a flat platen, of a band, means for securing one end of the band along one edge of the platen, a support which sustains the opposite end of the band, a guiding device connecting with said band-holding means engaging the band and a tension device with which the band is connected, and which is mounted on said support, and movable transversely thereon, in connection with the band, and arranged normally to retain the band in engagement with the surface of the platen, substantially as described.

18. The combination with a flat platen, of a band, a rocking and shiftable support disposed contiguous to one edge of the platen for sustaining one end of the band, a tension device engaging said band, and a movable member for holding the other end of the band at the opposite edge of the platen.

19. The combination with a flat platen, and a bracket disposed contiguous thereto, of a rod supported on said bracket, a non-rotatable collar slidable on the rod, a drum surrounding the collar, a coiled spring connecting the drum and collar, a flexible band extending across the platen and having one end secured to the drum, and laterally-shiftable means for securing the opposite end of the band to the platen in a plurality of positions, substantially as described.

20. The combination with a flat platen, of a carbon-sheet holder at one end of the platen, means for raising the holder, a member shiftable on said holder, a band arranged to extend across the platen, and means carried by and movable laterally with shiftable member and constructed automatically to raise the band when the carbon-sheet holder is raised, substantially as described.

21. The combination with a flat platen, of a carbon-sheet holder, means for raising the holder, a band extending across the platen, holding-means for the band, and means operated simultaneously with the raising of the carbon-sheet holder for effecting movement of the holding-means to position the band, substantially as described.

22. The combination with a flat platen, of a carbon-sheet holder, means for raising the holder, a member shiftable on said holder, a band connecting with said member, and means operated simultaneously with the raising of the carbon-sheet holder for actuating said member to position the band, substantially as described.

23. The combination with a flat platen, of a carbon-sheet holder, a band-holder, a carbon-sheet engaged by the carbon-holder, a band-holder engaged by the carbon-holder, and means for actuating the carbon-holder and the band-holder to position the carbon-sheet and band, away from the platen, substantially as described.

24. The combination with a flat platen, of a carbon-sheet-holder arranged at one end thereof, a pivoted rocker-element comprising two members, a work-confining band connecting with one of said members of the rocker-element, the other of said members of the rocker-element being constructed and

arranged to engage the carbon-holder and, when the rocker-element is in one position, to effect a holding of the band in engagement with the platen, and, when the rocker-element is moving into a different position, to effect a raising of the band away from the platen.

25. In a typewriter, the combination with a flat platen, of a band, a tension-device connected to the band at one side of the platen and arranged normally to retain the band in engagement with the surface of the platen, means arranged at the opposite side of the platen and engaged by the band and constructed to elevate the same away from the platen, and a support for said tension-device, said tension-device being arranged to slide upon said support.

26. In a typewriter, the combination with a flat platen, of a band, a tension-device connected to the band at one side of the platen and arranged normally to retain the band in engagement with the surface of the platen, means arranged at the opposite side of the platen and engaged by the band and constructed to elevate the same away from the platen, and a support for said tension-device, said tension-device being arranged to slide upon said support and comprising a spring-barrel and a shaft upon which the spring-barrel is designed to slide.

27. In a typewriter, the combination with a flat platen, of a laterally-shiftable band, a laterally-shiftable tension-device connected to the band at one side of the platen and arranged normally to retain the band in engagement with the surface of the platen, and means arranged at the opposite side of the platen and engaged by the band and constructed to elevate the same away from the platen.

28. The combination with a flat platen, of a band, a tension-device connected to the band at one edge of the platen, and an oscillating engaging-member for detachably securing the other end of the band at the opposite edge of the platen.

In testimony whereof, I affix my signature, in the presence of two subscribing witnesses.

GEORGE W. DONNING.

Witnesses:

ANDREW W. STEIGER,

JOHN R. WILTSIE.