United States Patent

[11] 3,573,691

[72] Inventor **John Bryan Taylor**
Wallingford, England

[21] Appl. No. **690,153**
[22] Filed **Dec. 13, 1967**
[45] Patented **Apr. 6, 1971**

[73] Assignee **United Kingdom Atomic Energy Authority**
London, England

[32] Priority **Dec. 14, 1966**
[33] **Great Britain**
[31] **56093**

[54] **PLASMA CONTAINMENT SYSTEMS**
3 Claims, 7 Drawing Figs.

[52] **U.S. Cl.** **335/299,**
313/161, 336/229
[51] **Int. Cl.** **H01t 5/00**
[50] **Field of Search** 313/231,
161; 335/213, 299; 336/229

[56] **References Cited**
UNITED STATES PATENTS

3,088,894	5/1963	Koenig	313/161X
3,290,219	12/1966	Hurwitz, Jr.	313/161X
3,293,583	12/1966	Kronsbein	336/229X

Primary Examiner—G. Harris
Attorney—Larson, Taylor and Hinds

ABSTRACT: A plasma containment system comprises a hollow torus having a solenoidal winding and either additional multiple helical windings wound in opposite direction on either side of a plane containing the major axis of the torus or a conductor on the minor axis of the torus arranged to carry current in opposite directions on either side of said plane.

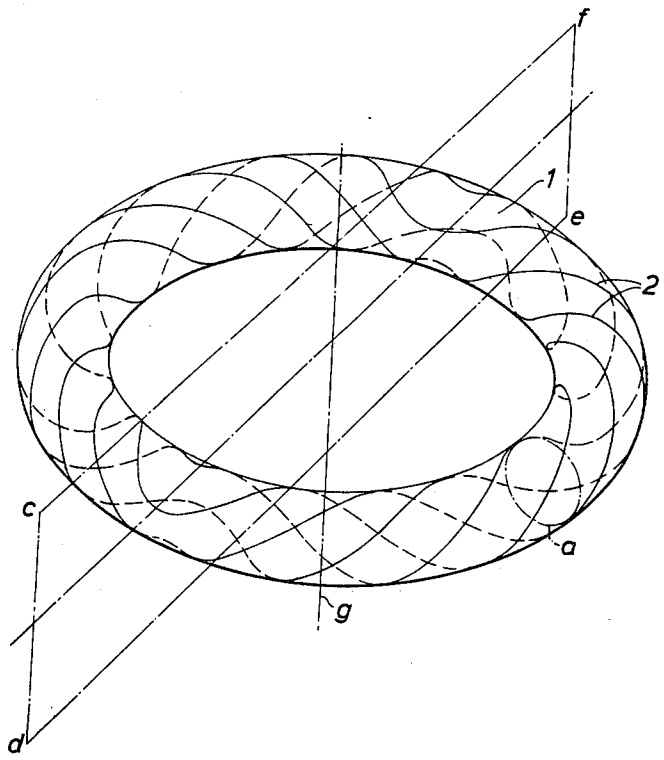

FIG. 1.

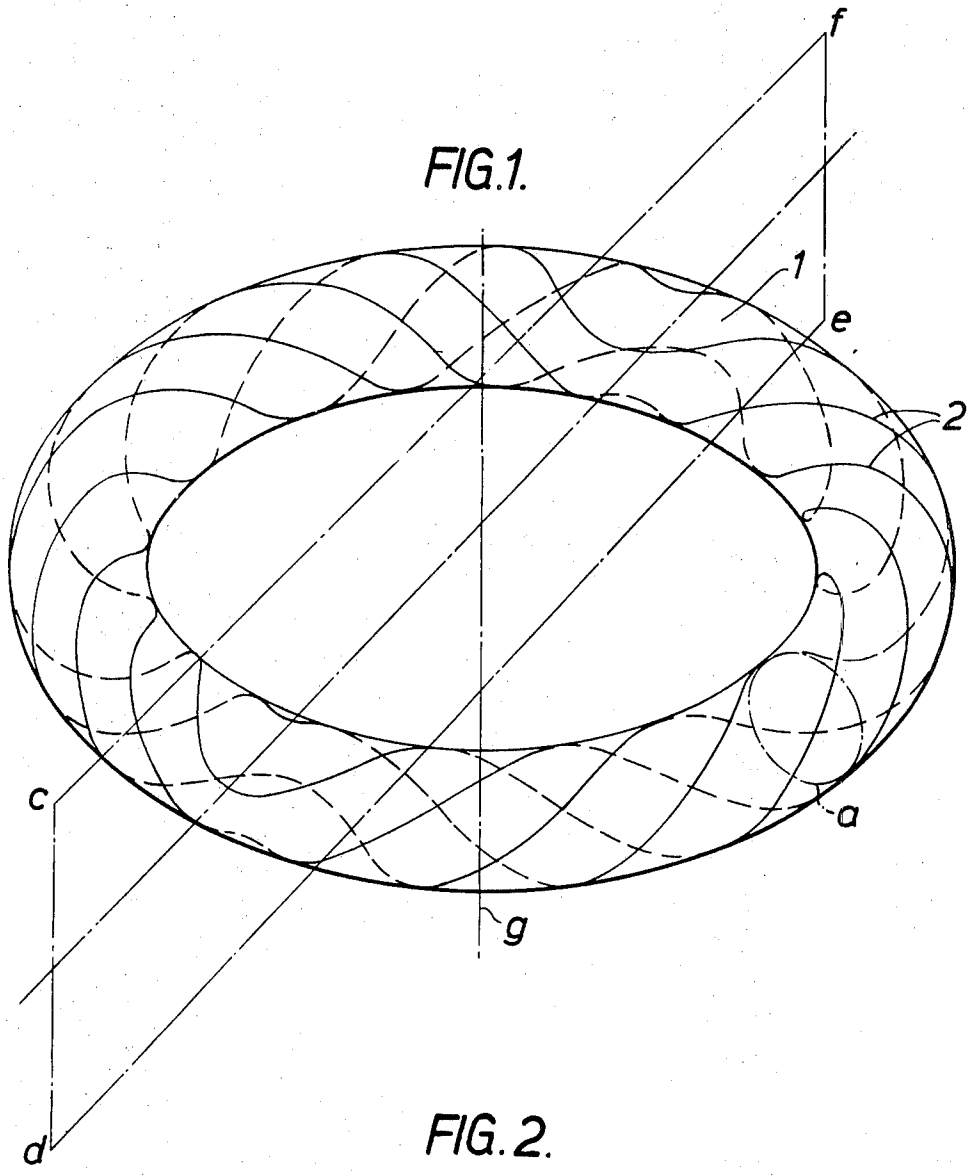

FIG. 2.

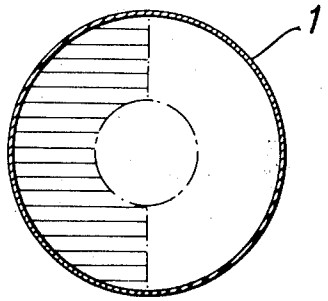

FIG. 3.

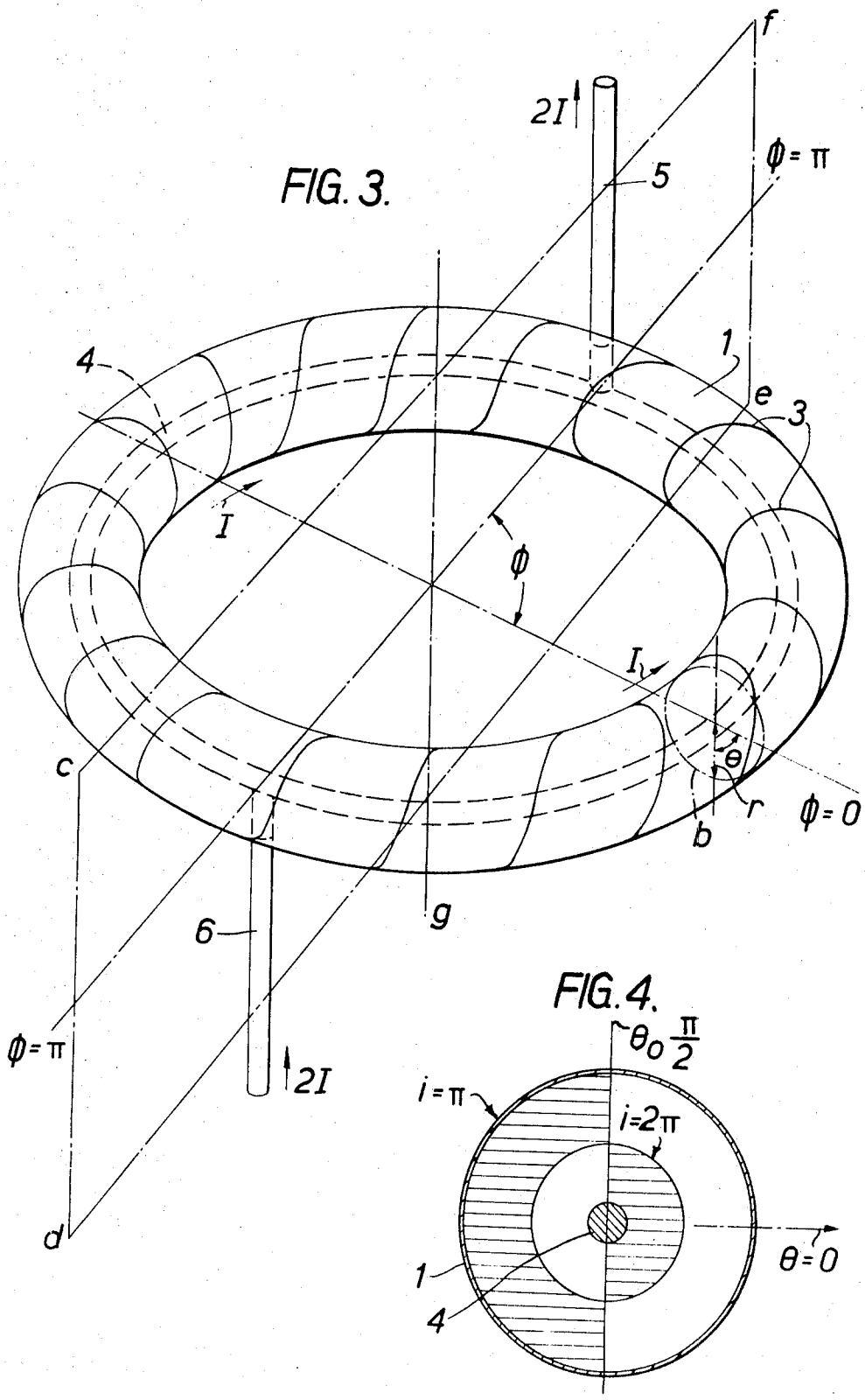

FIG. 4.

FIG.5.

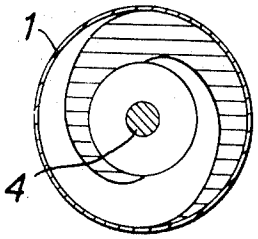

FIG.6.

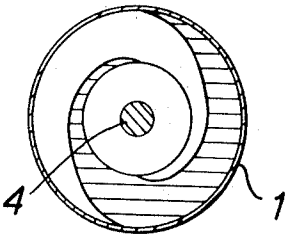

FIG.7.

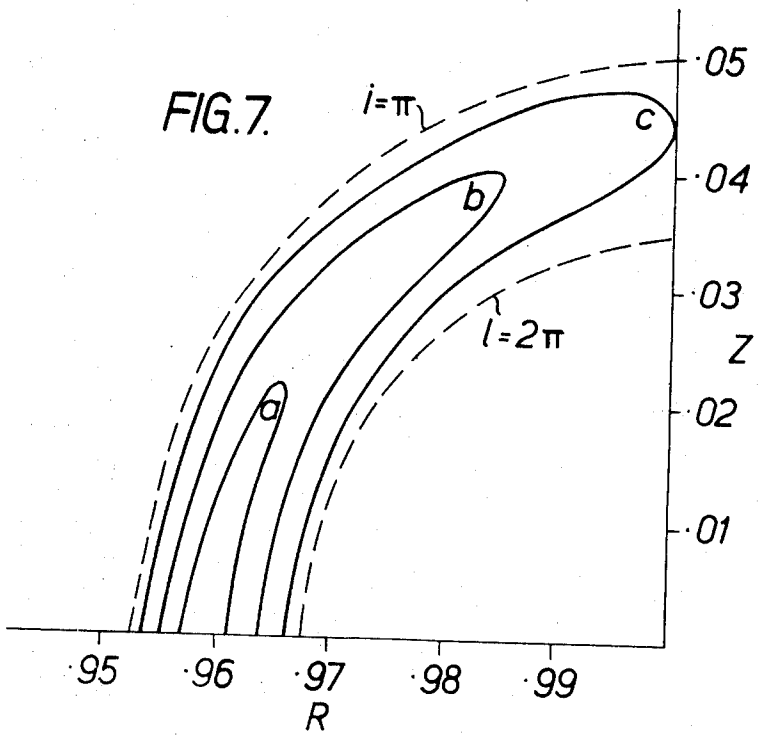

PLASMA CONTAINMENT SYSTEMS

BACKGROUND OF THE INVENTION

This invention relates to plasma containment systems.

A type of magnetic field configuration having special advantages for the containment of a hot plasma is one in which the magnetic lines of force close upon themselves to form toroidal loops, and in which the value of

$$\oint \frac{dl}{B}$$

where l is the distance along a line of magnetic force, and

B is the magnetic field strength,

taken around a closed line of magnetic force decreases towards the plasma periphery. It is also desirable that the length around a closed line of magnetic force be as small as possible compared to the useful dimensions perpendicular to the magnetic field. This means that the toroidal structure containing the magnetic field should be of low aspect ratio.

Although systems having these magnetic properties are known, the previously proposed ones have certain disadvantages. In particular, the best known of these, the multipole, which comprises a toroidal structure with a number of conducting rings encircling the torus within the enclosed volume, suffers from the overwhelming disadvantage that these conductors are "buried," that is to say are completely surrounded by plasma. It is therefore difficult, if not impossible, to support these conductors mechanically or to supply them with electric current or coolant.

Other previously proposed systems not requiring buried conductors are basically straight systems which are unlikely to survive the transition into a torus of low aspect ratio without loss of the desirable properties.

It will be appreciated that the main difficulty in designing a satisfactory system is the need to satisfy two requirements simultaneously. Thus in adjusting the magnetic field such that the value of

$$\oint \frac{dl}{B}$$

decreases towards the plasma periphery, closure of the lines of magnetic force will generally be lost, and the magnetic field corrections necessary to regain it may in turn destroy the desired

$$\oint \frac{dl}{B}$$

properties.

It is therefore an object of the present invention to provide a new or improved plasma containment system in which these desired properties can be achieved without the need for buried conductors.

SUMMARY OF THE INVENTION

According to the present invention, a plasma containment system comprises a toroidal structure wherein a plasma is to be contained, means for generating a magnetic field configuration comprising at least one electrical conductor for, upon energization thereof, generating a magnetic field the field lines of which form toroidal loops closed upon themselves, and an arrangement of further electrical conductors for, upon energization thereof, rotationally transforming the said magnetic field, the said further electrical conductors being antisymmetrical about a plane containing the major axis of the structure. The first-mentioned electrical conductor may comprise a solenoidal winding on the toroidal structure and the arrangement of further electrical conductors may comprise multiple helical windings which encircle the toroidal structure in opposite senses on the halves of the toroidal structure on either side of the said plane. In another embodiment, the first-mentioned electrical conductor comprises a solenoidal winding on the toroidal structure, and the arrangement of further electrical conductors comprises a conductor on the minor axis of the toroidal structure interrupted at the two points at which the conductor intercepts the said plane, and separate feed conductors connected at the said two points to each half respectively of the said conductor on the minor axis.

The term "antisymmetrical" as used in this specification means that each part of the system is the mirror image of the other part in the bisecting plane. In mathematical terms; if y, z are axes lying in the bisecting plane, and x is the axis perpendicular to the plane, then:

$B_x(x, y, z) = +B_x(-x, y, z)$
$B_y(x, y, z) = -B_y(-x, y, z)$
$B_z(x, y, z) = -B_z(-x, y, z)$

The basic magnetic field, of which the field lines comprise toroidal loops aligned with the minor axis of the toroidal structure, may be generated by a solenoidal winding, and the magnetic field rotationally transformed by further appropriately arranged electrical conductors. In this case, the above relations governing the magnetic field are automatically satisfied if the further conductors, for producing the rotational transfer form, are antisymmetrical (as defined hereinabove). So long as these conductors are antisymmetrical this condition alone ensures that the lines of magnetic force close upon themselves. It is then possible to adjust the magnetic field in either part so as to produce the correct variation of

$$\oint \frac{dl}{B}$$

and these adjustments will not interfere with the closure of the lines of magnetic force.

BRIEF DESCRIPTION OF THE DRAWINGS

Two plasma containment systems in accordance with the present invention will now be described by way of example with reference to the accompanying drawings, in which:

FIG. **1** shows the first system diagrammatically;

FIG. **2** is a section at the plane at *a* in FIG. **1** showing the stable and unstable regions;

FIG. **3** shows the second system diagrammatically;

FIG. **4** is a section similar to FIG. **2** but at the plane indicated at *b* in FIG. **3**;

FIGS. **5** and **6** are sections (to a reduced scale) at planes spaced angularly $\pi/2$ in each direction from the plane of FIG. **4**; and

FIG. **7** is a plot of computed contours of the stable regions.

DESCRIPTION OF THE PREFERRED EMBODIMENTS

Both the systems to be described are basically toroidal structures having arrangements of conductors which during operation are energized to provide a desired magnetic field configuration within the structure, the structure and the conductors being antisymmetrical about a plane c, d, e, f, containing the major axis g and bisecting the toroidal structure into two C-shaped parts. In the systems to be described the toroidal structures are circular, but this is not essential to the invention.

The antisymmetrical arrangement means that each part of the system is the mirror image of the other part in the bisecting plane. In mathematical terms; if y, z are axes lying in the bisecting plane c, d, e, f, and x is the axis perpendicular to the plane, then:

$B_x(x, y, z) = +B_x(-x, y, z)$
$B_y(x, y, z) = -B_y(-x, y, z)$
$B_z(x, y, z) = -B_z(-x, y, z)$

These relations governing the magnetic field are automatically satisfied if the conductors and the currents flowing in them to produce the magnetic field have antisymmetry, and so long as the conductors are antisymmetrical this condition alone ensures that the lines of magnetic force close upon themselves. It is then possible to adjust the magnetic field in either part so as to produce the correct variation of

$$\oint \frac{dl}{B}$$

and these adjustments will not interfere with the closure of the lines of magnetic force.

Referring now to FIG. 1, the first system comprises a toroidal structure 1 having a solenoidal winding on the surface of the torus, although for simplicity this winding is not shown in the drawing. During operation this winding is energized to produce an axisymmetrical toroidal magnetic field. This field is antisymmetrical in the sense defined above and so has the magnetic line-closure property. It does not, however, have the correct variation of

$$\oint \frac{dl}{B}$$

Further, multiple, helical windings 2 are therefore provided on the surface of the torus, these windings when energized with electrical current flowing in opposite directions in adjacent conductors producing a helical-multipole magnetic field. This results in a rotational transform of the lines of a magnetic force about the magnetic axis and in order to preserve the magnetic line-closure property this helical field must itself be antisymmetrical, that is, the windings 2 must rotate in opposite directions on the two halves of the torus bisected by the plane c, d, e, f as shown. The rotational transform in each half of the torus is then also in the opposite direction, so that there is no net transform over the whole system and the lines of magnetic force close on themselves after one circuit of the torus as before.

It can be shown that if the rotational transform produced in each half of the torus has a value between 2π and 4π (which can be achieved by adjusting the current in the windings 2), then a region can be created in which

$$\oint \frac{dl}{B}$$

has the desired variation. In the minor cross-sectional plane a shown in FIG. 2 to which reference is now made, this favorable

$$\oint \frac{dl}{B}$$

region is approximately of the shape shown shaded, being bounded by the radii on which the rotational transform lies between approximately 2π and 4π. This region of favorable

$$\oint \frac{dl}{B}$$

rotates about the magnetic axis with the lines of magnetic force, first in one direction and then in the other, with progress around the torus, so as to return to its original position after one complete circuit.

Referring now to FIG. 3, the second system is similar to the first in that it comprises a toroidal structure 1 having a solenoidal winding 3 on the surface of the torus. In this case, however, the rotational transform in each half of the torus is produced by a simple circular conductor 4 on the minor axis of the torus which during operation carries a current I. This produces a rotational transform approximately proportional to I/r^2 where r is the distance from the conductor 4. To give the required antisymmetry the current in the conductor 4 is reversed in the two halves of the torus, so that two current feed conductors 5 and 6 are required at diametrically opposite points in the plane c, d, e, f.

It can be shown that when the current 1 in the conductor 4 is adjusted to produce a rotational transform over either half of the torus, between 2π and 4π then a toroidal region of favorable

$$\oint \frac{dl}{B}$$

is formed, furthermore, this region is not intercepted by the current feeds at 5 and 6.

This can be demonstrated by introducing polar coordinates r, θ centered on the conductor 4 together with the azimuthal angle Φ around the torus. The basic toroidal field is

$$B_\theta = B_o\left(1+\frac{r}{R}\cos\theta\right)^{-1}$$

and the current 1 in conductor 4 produces a component B_θ which (except in the immediate vicinity of the feed points) is

$$+\frac{2I}{r}$$

in one-half of the machine and

$$-\frac{2I}{r}$$

in the other. If the plane b is taken as a reference plane where $\Phi=0$ half way between the two feed conductors 5 and 6 and lines of force labeled by the r, θ value at which they intercept this plane, then the equation of a line of force is

$$r\simeq r_o,\ \theta\simeq\theta_o+\frac{2i}{\pi}\theta \quad \left(-\frac{\pi}{2}<\theta<\frac{\pi}{2}\right)$$

$$r\simeq r_o\theta\simeq\theta_o+\frac{2i}{\pi}(\pi-\theta) \quad \left(\frac{\pi}{2}<\theta<\frac{3\pi}{2}\right)$$

where i(r) is the rotational transform over *one quarter* of the torus, $i(r)\sim\pi RI/r^2B_o$.

Then the value of $\oint\frac{dl}{B}$ is:

$$\oint\frac{dl}{B}=\frac{2R}{B_o}\int_{-\pi2}^{\pi/2}\left(1+\frac{r}{R}\cos\theta\right)^2d\theta\simeq\frac{2\pi R}{B_o}+\frac{4\pi r}{B_o}\frac{\sin i}{i}\cos\theta_o$$

or with an appropriate normalisation

$$\frac{B}{2\pi R}\oint\frac{dl}{B}\equiv U=1+\frac{2r_o}{R}\frac{\mathrm{Sin}\ i(r_o)}{i(\tau_o)}\cos\theta_o \qquad (1)$$

It can be seen from this expression that both

$$\oint\frac{dl}{B}\text{—stable}$$

and

$$\oint\frac{dl}{B}\text{—unstable}$$

regions exist. The boundaries between them are the curves $U=1$, that is where

$$\theta_o=\pm\frac{\pi}{2}$$

and where $i(r)=\pi$. At the reference plane $\Phi=0$, therefore, the structure of the stable and unstable regions is the simple one shown in FIG. 4. The shaded areas are those where $U>1$, (stable region) the unshaded ones have $U<1$, (unstable region).

As one follows the lines of force around the torus the cross section of the stable "tube" becomes distorted because of the different values of rotational transform at different radii. Typical cross sections at $\theta=\frac{\pi}{2}$ and $\theta=\frac{\pi}{2}$ FIGS. 5 and 6 respectively. It is important to note that although this

$$\oint\frac{dl}{B'}\text{—stable}$$

zone rotates about the conductor 4, it does so first in one direction and then in the other so that it does not completely encircle the conductor. Furthermore, the

$$\oint\frac{dl}{B}\text{—stable}$$

zone never completely surrounds the conductor at any point so that there is no difficulty in providing mechanical support or in feeding current or coolant to it.

In the simple calculation given above it is assumed that the rotational transform is independent of the azimuth Φ around the torus except for a change of sign at the "crossover" points between one-half of the torus and the other. This is not, however, an essential approximation; for example, if constant i is replaced by the smoothly varying rotational transform $i\cos\Phi$, which has the correct antisymmetry, then we would get in place of equation (1) above:

$$U=1+\frac{2r}{R}J_o(i)\cos\theta_o$$

which leads to exactly the same picture of stable and unstable regions except that the boundaries between them are now at radii corresponding to a rotational transform given by $J_o[i(r)]=0$ instead of $i(r)=m\pi$. Any other variation of rotational transform with azimuth Φ around the torus will similarly only modify the radii of the boundaries between stable and unstable regions.

The calculations given above neglect the toroidal curvature of the conductor **4**, (by assuming its field is $2I/r$) and the perturbing effect of the current feeds at **5** and **6**. However, the field corresponding to FIG. **4** has also been integrated numerically and the results confirm the validity of the simple formula (1). For example, FIG. **7** shows some computed contours of

$$\oint\frac{dl}{B}$$

and of i. At aspect ratios of 10:1 or more, both the shape of the

$$\oint\frac{dl}{B}$$

contours and the "well depth" $(U-1)_{max}$ are well represented

by Eq. (1); at smaller aspect ratios the shape is correctly predicted by Eq. (1) but the computed well depth is less than that expected. Naturally the well depth can be improved by adding appropriate supplementary (antisymmetric) conductors—in particular by adding a return coaxial screen around the conductor **4**.

I claim:

1. A plasma containment system comprising a toroidal structure wherein a plasma is to be contained, means for generating a magnetic field configuration comprising at least one electrical conductor for, upon energization thereof, generating a magnetic field the field lines of which form toroidal loops closed upon themselves, and an arrangement of further electrical conductors for, upon energization thereof, rotationally transforming the said magnetic field, the said further electrical conductors being antisymmetrical about a plane containing the major axis of the structure.

2. A system as claimed in claim **1** wherein the said first-mentioned electrical conductor comprises a solenoidal winding on the toroidal structure and the said arrangement of further electrical conductors comprises multiple helical windings, which encircle the toroidal structure in opposite senses on the halves of the toroidal structure on either side of the said plane.

3. A system as claimed in claim **1**, wherein the said first-mentioned electrical conductor comprises a solenoidal winding on the toroidal structure, and the said arrangement of further electrical conductors comprises a conductor on the minor axis of the toroidal structure, which conductor on the minor axis has current feed conductors extending into the toroidal structure at opposed points where the conductor on the minor axis intercepts said plane.