June 15, 1943. W. F. BIRD 2,321,974

METHOD OF PRODUCING SHADE AND COLOR CONTRASTS IN TEXTILE FABRICS

Filed Dec. 19, 1939

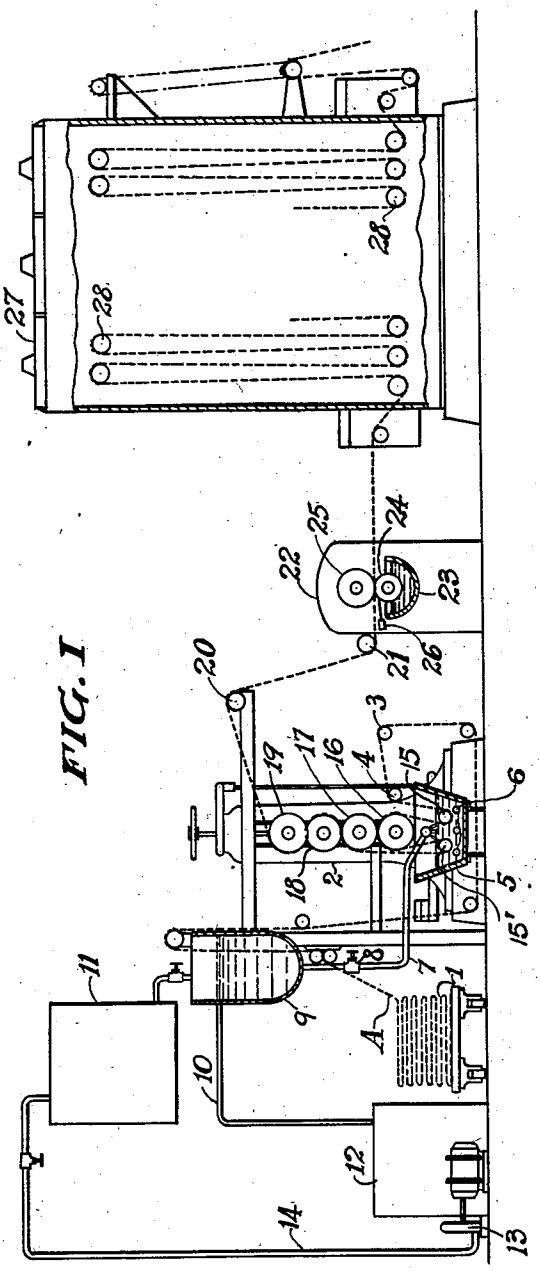

FIG. I

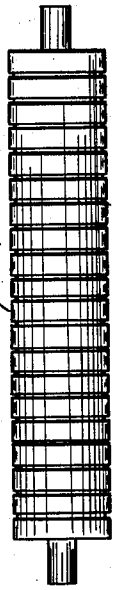

FIG. II

INVENTOR
WHITWORTH F. BIRD.
BY Paul J Schmitz
ATTORNEY

Patented June 15, 1943 2,321,974

UNITED STATES PATENT OFFICE

2,321,974

METHOD OF PRODUCING SHADE AND COLOR CONTRASTS IN TEXTILE FABRICS

Whitworth F. Bird, Wallingford, Pa., assignor to Collins & Aikman Corporation, Philadelphia, Pa., a corporation of Delaware

Application December 19, 1939, Serial No. 309,921

8 Claims. (Cl. 8—14)

My invention relates to an apparatus and method for producing multi-tone or multi-color effects on a base such as textile fabrics.

More particularly my invention comprises the uniform application of a vehicle containing a dyestuff and the subsequent modification of the effect of such application before the fixation of the dyestuff to the fibers by steaming or other fixing step. This modification may be effected by a localized treatment which will cause the unfixed dye to migrate because of dilution and/or which masks the fibers during the fixation step or which, because of uneven dampness, results in variation in the dye development during fixing. A preferred treatment according to my invention includes the localized application of a water soluble material as it is usually necessary to free the fabric of foreign matter before use as by washing or rinsing. A thickened water solution of gum tragacanth, gum arabic, locust bean gum, starch or mixtures of these having suitable consistency and adhesive properties are examples of materials suitable for use in this preferred practice of my improvements. Other materials such as volatile solvents for the dyestuff may also be locally applied to produce contrasts. The consistency of the material applied between the application of the dyestuff to the fibers and the fixation may vary between wide limits depending on the type of weave, the particular fibers and the amount of control required for the particular effect desired. In most cases involving the use of water, thickened solutions are preferable.

My invention is especially useful but is not limited to obtaining multi-tone or multi-color effects on relatively thick fabrics such as cut pile fabrics, in which the fabric is of such texture and has sufficient body to cause or permit migration of unfixed dyestuff toward the back or inner portion away from the face or into the treating material when a material such as described above is applied locally to one side. The structure of a woven pile fabric is such that the controlled migration of the unfixed dyestuff is aided by the pile tufts affected by the localized treatment. The unfixed dyestuff tends to follow the upright fibers of the pile tufts toward the back of the material. An example of a pile fabric to which my invention may be applied is illustrated and described in prior Patent No. 2,070,335, issued February 9, 1937. It will thus be seen that the invention contemplates a mechanical or physical action as opposed to chemical reactions involving the formation of new compounds.

According to my improvements, color contrasts can be obtained which are similar to those obtained by matched or block printing on pile fabrics which have been woven with a pre-dyed backing. It will thus be seen that definite pattern areas as well as mottled effects can be produced according to my improvements. My effects can be produced at a small fraction of this cost. As will be hereinafter more fully set forth, printing over unfixed dyestuff may also be done in any color without the great modification in shade inherent in over-printing on completely dyed material. Dark colors may be over-printed with lighter colors and my process can be carried out with union dyeing operations. The dyestuff may be initially applied in any convenient and known manner and form, as for example, as set forth in Drobile et al., Patent No. 2,071,922, issued February 23, 1937. The modification of all-over vat dyeing processes are also contemplated to be within the scope of my improvements, particularly when the vat dye is applied and reduced to the leuco state after printing.

An object of my invention is to provide a method of producing multi-tone and multi-color effects on fabrics.

Another object is to provide a combination of machines for producing multi-tone or multi-color effects.

Another object is to modify a dyeing operation by a printing operation and to subsequently fix the color.

Another object is to provide a continuous method for obtaining multi-shade and color effects by controlling the migration of unfixed dyestuff in a fabric.

Another object is to control and localize the migration of unfixed dyestuff in a fabric by the use of printing gum.

Another object is to reduce the color effect of unfixed dye in localized areas which are over-printed.

These and other objects of invention will be manifest from a consideration of the following description, claims and drawing in which:

Fig. I is a diagrammatic side elevation of mechanism which may be used in the practice of my invention.

Fig. II is a detail view of a print roller such as may be used in my invention.

As an example and by way of illustration only, of the steps followed in a preferred practice of my invention, I have illustrated in Fig. I of the drawing, the continuous feeding of a pile fabric A from a source of supply 1 to a dyeing apparatus

2 in which the fabric passes downwardly over guide rolls 3 and 4 into a trough 5 containing a bath of dyestuff dispersed in an aqueous vehicle. The fabric is introduced into the bath and emerges therefrom with the pile face side down so as to contact the print roller which applies the gum or solvent. The dye bath is maintained at a constant temperature by heating coils 6 and is maintained at a constant level by replenishment with a rehabilitating dye liquor supplied to the bath through a supply pipe 7 containing a control valve 8. The rehabilitating liquor which is added to the bath substantially continuously compensates for absorption, exhaustion and evaporation and has a dyestuff concentration sufficient to maintain the dye bath substantially constant in its tinctorial value. The pipe 7 is connected with a receptacle 9 provided with an overflow pipe 10 for maintaining a constant level and pressure in the receptacle 9 which is supplied with a rehabilitating dye liquor from a mixing tank 11. The overflow through the pipe 10 may be collected in a tank 12 and returned to the mixing tank 11 by pump 13 and pipe 14. Preferably, the bath in the trough 5 is maintained at a constant temperature which may be in the range from 180 to 210° F. and the pH value of the dye bath is controlled to maintain a constant and low exhaustion rate. The volume of the bath is kept as small as practicable while securing thorough admixture therewith of rehibilitating liquor and a thorough saturation of the fabric in passing therethrough.

The saturation may be effected in one or more immersions, and as illustrated, the fabric first passes over the submerged journalled roller 15, is then squeezed between the rubber covered nip rollers 16 and 17, then passes over the submerged journalled roller 15' and then is again squeezed between the rubber covered nip rollers 17 and 18 and between the rollers 18 and 19.

In passing through the bath and the rollers, the fabric is maintained in tension longitudinally or warp-wise and transversely or weft-wise.

The fabric A by passing through the dye liquor is thoroughly saturated with the dye liquor which is forced down to the bases of the pile tufts and into and through the backing or ground of the fabric by the squeezing action of the rolls 16, 17, 18 and 19. Any excess liquor expressed by the pressure of the rollers is returned to the dye trough 5. The period of immersion of the fabric and the affinity of the dyestuff for its vehicle are such that the dyestuff is not completely exhausted into the fabric on leaving the nip rollers. The fiber while still damp with its entrained dye liquor is then passed over drag roll 20 and guide roll 21 and through the printing device. The damp fabric as it enters the printing device may conveniently contain approximately 100% or less of moisture based on its dry weight. The pressure on the fabric as it passes through the printing device may be less than that resulting from the nip rollers of the pad box. It is only those portions of the fabric which engage the engraved sections of the print roller which are acted on during the passage of the fabric through the printing device.

The printing device illustrated, is of known design and is conveniently mounted on a stand 22. The essential elements of this printing mechanism is a trough 23 which holds the supply of treating material, a journalled and engraved roller 24 partially submerged below the treating material, an adjustable pressure roller such as the rubber or metal roller 25 positioned immediately over the engraved roller 24 and a rubber or metal apron wiper 26 which is pivotally mounted on the frame 22 to cooperate with the engraved roller. All the printing gum, solvent or treating material which is not in the engraved portions of the roll is thus wiped from the roll and flows back into the trough 23. The projecting pile fibers of the pile tufts position themselves within the engraved portion and absorb all of the treating material. This creates a washing action or dilution of the dye solution and causes the unfixed dyestuff in those pile tuft areas which coincide with the engraving to migrate toward the back of the cloth and/or into the treating medium. The fabric then passes directly to a steaming chamber or ager 27 in which the dye becomes substantially fixed to the fibers. The fabric is moved forwardly through the devices by the nip rollers, drag roll 20 and driven ager rollers 28. After fixation of the dye, the fabric may move to finishing devices. If desired, additional steps may be performed to remove any residual unfixed dyestuff and/or the foreign matter before finishing.

It is entirely feasible to introduce coloring materials into a printing gum used in my process. When this is done the localized action is the same as before and the gum controls both the action and the positioning of the coloring material carried by the gum. Surprisingly distinct patterns are produced by this application of superposed colors over unfixed dyestuffs in fabrics and the result obtained is distinctly different than that which results from over-printing previously dyed fabrics. Stencils or other convenient means may be used in connection with the localized treatment. It is obviously true that a base color will have a distinct effect on the ultimate color or shade obtained from over-printing and especially so when one color will not mask the other in ordinary over-printing. It will thus be seen that by partially removing the dyestuff before it is fixed, I approach the condition of superposing color on a substantially white background and that what color does exist in the printing area is effectively masked in the printing operation.

It will be seen that I have produced a method and comb'nation of apparatus whereby I am enabled to produce contrasting shade and color effects on fibrous bases such as cotton, wool, etc., by a continuous process, and if desired without the use of the usual chemical discharge and resist materials.

While I have described my invention primarily in connection with thick fabrics such as pile fabrics wherein the peculiar structure aids in the control of the treatment, I do not intend to be limited except by the scope of the attached claims.

Having thus described my invention, I claim:

1. In a continuous process for obtaining contrasting visual effects on a fabric, the steps which consist in moving the fabric at a substantially constant rate through a dyebath containing an aqueous dyestuff vehicle and a dyestuff capable of being fixed to the fibers of the fabric, squeezing the fabric to regulate the amount of aqueous dyestuff vehicle and dyestuff entrained and to uniformly entrain the said vehicle and unfixed dyestuff in the fabric, locally and physically treating predetermined portions of the fabric containing entrained unfixed dyestuff and its aqueous vehicle by applying an aqueous medium which together with the aqueous dyestuff vehicle

causes a physical change of the position of the unfixed dyestuff in the predetermined treated portions and then fixing the dyestuff to the fibers of the fabric.

2. In a continuous process for obtaining definite pattern areas on a fabric, the steps which consist in moving a fabric at a substantially constant rate through a dyebath containing a dyestuff solvent vehicle and a dyestuff capable of being fixed to the fibers of the fabric, squeezing the fabric to regulate the amount of dyestuff solvent vehicle and dyestuff entrained and to uniformly entrain the said solvent vehicle and unfixed dyestuff in the fabric, locally and physically treating predetermined portions of the fabric containing entrained unfixed dyestuff and its solvent vehicle by applying with pressure a printing gum which together with the solvent vehicle causes a physical change of the position of the unfixed dyestuff in the predetermined treated portions and then fixing the dyestuff to the fibers of the fabric.

3. In the continuous production of designs on textile pile fabrics, the steps which consist in uniformly applying unfixed dyestuff to the textile fabric, locally applying a water containing vehicle with pressure to predetermined areas of the face of the fabric to cause unfixed dyestuff to migrate into the fabric and away from its face, and then fixing the unfixed dyestuff to the textile fibers.

4. In the continuous production of definite pattern areas in textile pile fabrics, the steps which consist in uniformly applying unfixed dyestuff to the textile pile fabric, locally applying to predetermined areas of the face of the pile fabric a printing gum containing a solvent for the said unfixed dyestuff by means of pressure, and then fixing the unfixed dyestuff to the fibers of the pile fabric.

5. In the production of definite pattern areas on textile pile fabrics, the steps which consist in uniformly applying unfixed dyestuff to the textile fabric, locally applying to predetermined portions of the face of the pile fabric a printing gum containing coloring matter in a solvent for the unfixed dyestuff said printing gum having sufficient body to control the positioning of the coloring matter contained in the gum after application to the fabric and being sufficiently fluid to effect a change of position of the initially applied dyestuff, and then fixing the unfixed dyestuff to the fibers of the pile fabric.

6. In the continuous production of definite pattern areas in textile pile fabrics the steps which consist in uniformly applying unfixed dyestuff to the face of the textile pile fabric, locally applying to predetermined areas of the face of the pile fabric a solvent for the unfixed dye to cause the unfixed dye to migrate away from the face of the fabric, and then fixing the unfixed dyestuff to the pile fibers.

7. The combination set forth in claim 18 further characterized in that the aqueous medium contains a dyestuff which is fixed to the fabric simultaneously with the dyestuff initially applied.

8. The combination as set forth in claim 19 further characterized in that the printing gum contains a dyestuff which is fixed to the fabric simultaneously with the dyestuff initially applied.

WHITWORTH F. BIRD.

CERTIFICATE OF CORRECTION.

Patent No. 2,321,974. June 15, 1943.

WHITWORTH F. BIRD.

It is hereby certified that error appears in the printed specification of the above numbered patent requiring correction as follows: Page 3, second column, line 27, for "claim 18" read --claim 1--; line 32, for "claim 19" read --claim 2--; and that the said Letters Patent should be read with this correction therein that the same may conform to the record of the case in the Patent Office.

Signed and sealed this 27th day of July, A. D. 1943.

Henry Van Arsdale,
Acting Commissioner of Patents.

(Seal)