Jan. 19, 1937. O. P. WINFORD 2,068,214

LOOSE LEAF CALENDAR

Filed March 6, 1933

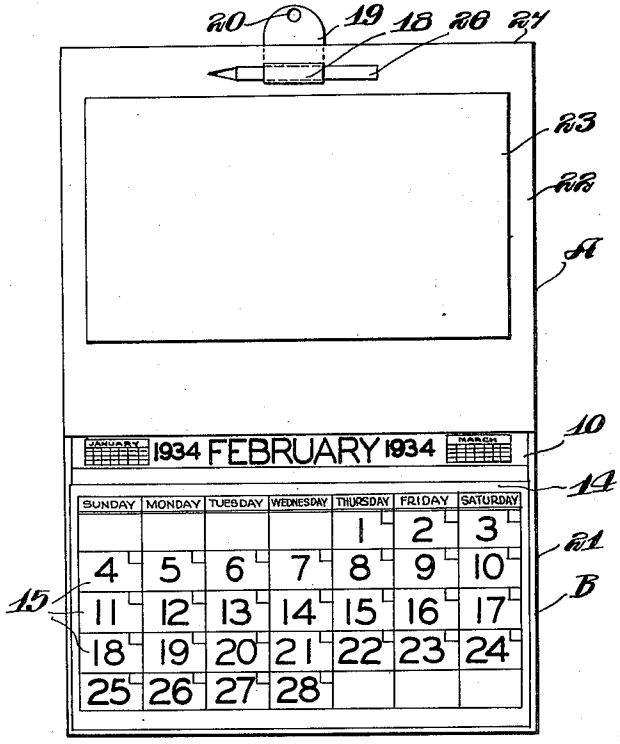

Fig. 1

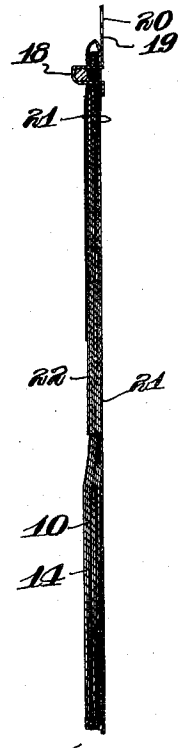

Fig. 2

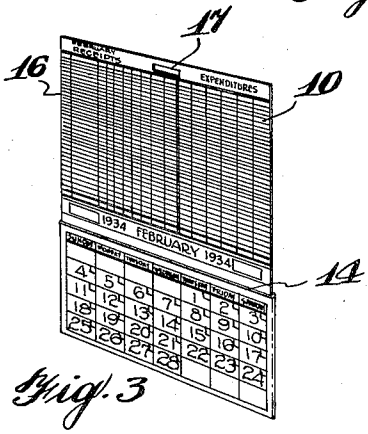

Fig. 3

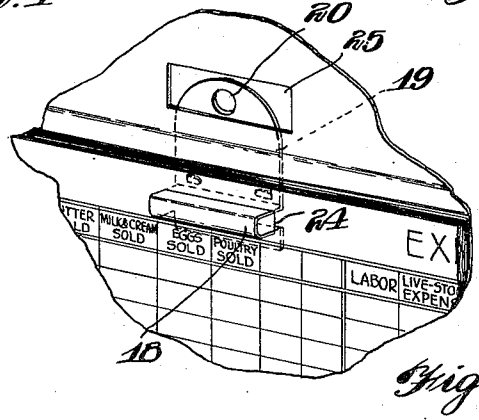

Fig. 4

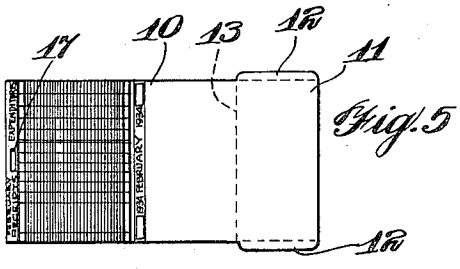

Fig. 5

Inventor

Orion P. Winford

By Horace Pitcher

Attorney

Patented Jan. 19, 1937 2,068,214

UNITED STATES PATENT OFFICE

2,068,214

LOOSE LEAF CALENDAR

Orion P. Winford, St. Paul, Minn., assignor to Brown & Bigelow, St. Paul, Minn., a corporation of Minnesota

Application March 6, 1933, Serial No. 659,694

9 Claims. (Cl. 40—121)

This invention relates to a loose leaf calendar wherein the calendar sheets may be held as loose leaf memorandums with calendar indicia associated therewith. Each sheet of the calendar may be loosely disposed upon a suitable holding means so that the sheets may be mounted in a binder which holds them together collectively to form the calendar. Thus the calendar sheets may be removed and placed back of each other after the particular month illustrated on the face thereof has passed, and be retained hanging in a loose leaf manner as an indexed memorandum as associated with the different months of the year.

It is also a feature of the invention to provide a loose leaf memorandum pack with a pocket and index for each sheet. The sheets are made from a single piece of material having an end folded over to form a pocket on one end of the sheet and with suitable indicia associated with the pocket having reference to the indicia showing upon the memorandum sheet which permits the pocket to be used as an indexed file with the memorandum sheet.

In this manner I provide a pack of loose leaf sheets which may be used as a ready reference file with the pocket for receipts, bills, statements, etc., for the month, and wherein indexed indicia permits reference to any particular day and such memorandums as may be desired to be entered for such time. With the simple, inexpensive construction of my loose leaf pack and calendar, the sheets may be readily placed at the back of the pack after they have been used at the front and saved for future reference.

I also provide a suitable means of hanging the pack upon the wall which includes a convenient holding means for a pencil as well as providing the holder for the loose leaf sheets of the pack and a covering or binding means for the sheets of the pack.

In the drawing:

Figure 1 is a front view of my loose leaf calendar with the indexed pockets.

Figure 2 is an edge view of the same.

Figure 3 illustrates one of the loose leaf calendar sheets with the pocket, showing the same removed from the pack.

Figure 4 is a detail of a portion of the loose leaf calendar, showing the hanger element which forms a binder for the cover and a holder for a pencil.

Figure 5 illustrates the died-out formation of each loose leaf sheet, to show the construction of the pocket thereof.

The loose leaf calendar and memorandum A is formed with a series of sheets 10. The sheets 10 are died-out as illustrated in Figure 5 to form the lower end 11 of the sheet with end flaps 12. The lower ends 11 of the sheets 10 is folded on the dotted line 13 and the end flaps 12 are pasted to the back of the sheets so as to form a pocket 14 on the lower end of each sheet 10.

The front face of the pocket 14 of the sheets 10 may be printed with indicia 15 to indicate months of the year, as January, February, etc. The indicia 15 may also serve as an index to refer to the memo portion 16 of the sheet 10 whenever it is desired. The portion 16 may be divided to correspond with the divisions and indicia on the face of the pocket 14 so that each has due reference to each other.

The sheets 10 are perforated at 17 and are adapted to fit over the loop 18 of the hanger member 19 which is formed from a piece of sheet metal and which is provided with an eye 20 so that the hanger member 19 can support the calendar or pack A on the wall.

The hanger member 19 is adapted to be fixed to the binder B which acts as a supporting means and holder for the individual loose leaf sheets 10 and which is formed with a back portion 21, ordinarily a little larger than the sheets 10, and formed with an integral downwardly depending cover flap portion 22 which is smaller than the back 21 so as to permit the face or pocket 14 to be exposed as illustrated in Figure 1. The portion 22 forms a cover flap and may be provided with a display space such as 23. The hanger member 19 is formed from a single piece and the loop portion thereof extends through the opening 24 in the back portion 21. The cover flap 22 is formed with the opening 25 which fits down over the loop 18 and permits a pencil 26 or other implement to be placed through the loop 18, thereby forming a locking means for holding the flap 22 down against the top portion 16 of the sheets 10, when the binder is normally held upon the wall. It is important that this binder is up near the top edge 27 of the calendar or pack A, where the same is out of the way and in a position where it will not interfere with the display surface 23 of the same. It is also important that the hanger member 19 forms the loop which provides a holder for the pencil 26, as well as forming the means of engaging through the perforations 17 of the sheets 10 to hold the sheets in alignment by the single supporting means of the loop in this simple manner. The loop is of sufficient width to give the proper bearing and engagement in the open-

ing 17 to hold the sheets in line with each other when they are supported in the back of the calendar A.

In use the calendar or indexed pack with the loose leaf sheets having pockets thereon is very desirable for receipts, bills, statements, or other slips or articles that are desired to be placed in the pocket 14 and which may have a bearing as to particular memorandum carried upon the surface 16. The pocket as associated with the calendar and particularly with the loose leaf feature, provides a utility for the calendar of a very desirable nature. The individual sheets 10 may be replaced by other sheets at any time or may be removed after the month appearing on the face of the pocket 14 has elapsed, and the past month placed at the back of the calendar upon the weight supporting loop 18 and held neatly and tidily in place even though the pocket of the same contains matters which had a particular bearing for that month. Thus the user of this calendar may refer back to the matters in the pocket at any time or may remove the sheet entirely and store it away, folding it as an envelope by folding the portions 16 down over the pocket 14 and thereby keeping the entire memorandum and pocket for future reference. This calendar memorandum loose leaf pocket may also carry indicia on the back of the same of material interest to the user of the calendar, such as farmers, or others using the calendar, thereby increasing the utility of the same. Further, the cover or binder B may be formed in a permanent manner so that the loose leaf sheets may be supplied at any time.

It is also apparent that as a reference pack, the loose leaf memorandum sheets with the pockets 14 on the same are very desirable for different uses than a calendar and wherein the date indicia such as 15 may be reference indexes which will correspond with similar reference indexes on the memorandum portion 16. Therefore the utility is apparent, more particularly because the device is of a simple nature, yet having a practical appeal for these uses and others of a similar character.

I claim:

1. A loose leaf calendar including, a back, a binder member mounted at the upper edge of said back adapted to support a series of loose leaf sheets, each sheet having indicia at the top thereof to represent one or more months of the year, a pocket on the lower portion of each of said sheets formed as a part thereof, a calendar on said pocket, and means for supporting said sheets freely removable in their entirety.

2. A memorandum pack including, a cover member having a back portion, a front cover sheet adapted to extend over the back, a series of loose leaf sheets, and loop means adapted to form a hanger for said back extending through the top of said back and said sheets with the loop thereof forming a pencil-receiving channel.

3. A loose leaf pocket sheet including, a memorandum portion, and a pocket associated with said memorandum portion, corresponding indicia on said pocket and said memorandum portion, each sheet having opening means formed in said sheet for supporting said sheet with other similar sheets to form a loose leaf reference pack, and cover means normally concealing said memorandum portion and exposing said pocket.

4. A calendar comprising, a series of loose leaf sheets, a binder adapted to extend along the back and over a part of said sheets, a metal loop hanger, openings in said binder and each of said sheets to support said sheets in a loose leaf manner, and rod-like means extending through said loop to hold said binder and loose leaf sheets together in a pack.

5. A calendar comprising, a binder back and cover portion, a metal supporting hanger secured to said back, a loop formed in said hanger between the ends thereof, openings formed through said back and cover portions, a series of loose leaf sheets held on said loop under said cover portion, and a member adapted to extend through said loop to lock said sheets and binder together in a loose leaf calendar.

6. A calendar comprising, a series of sheets each of which have an upper memorandum portion, a pocket formed by folding the lower end of each sheet onto itself, calendar indicia on said pocket, means for holding said sheets in loose leaf form together in a pack, and a cover sheet concealing said upper memorandum portion of the outermost sheet.

7. A calendar and memorandum pack including, a series of loose leaf sheets, a backing sheet, means adjacent one edge of said backing sheet for holding said sheets removable and replaceable and in a manner to change the respective positions of said sheets so that the top sheet may be placed back of all of the other sheets, and calendar indicia on each of said sheets.

8. A calendar including, a binder member, and means for supporting a series of calendar sheets in a loose leaf manner in said binder member one in back of another, means cooperable with said binder to prevent relative movement of said binder and the attached portion of said sheets, said means removable whereby said sheets may be transposed from the front to the back in use as a calendar.

9. A reference calendar including, a backing sheet, a series of sheets each of which has a memorandum flap thereon, a pocket formed on each of said sheets by folding one end of said sheets onto itself, and loose leaf supporting means on said backing sheet for supporting one edge of said sheets in definite fixed relation to said backing sheet to provide a calendar pack, and said sheets having a construction to permit the memorandum flap associated with said pocket to be folded over onto the pocket to close the same when said sheets are removed from the pack, forming a pocket or envelope-like container by each of said sheets for holding receipts, bills and the like therein for future reference.

ORION P. WINFORD.