Dec. 22, 1964 N. A. KELLY 3,162,349

CONTAINER CLOSURE CONSTRUCTION

Filed Oct. 23, 1961 4 Sheets-Sheet 1

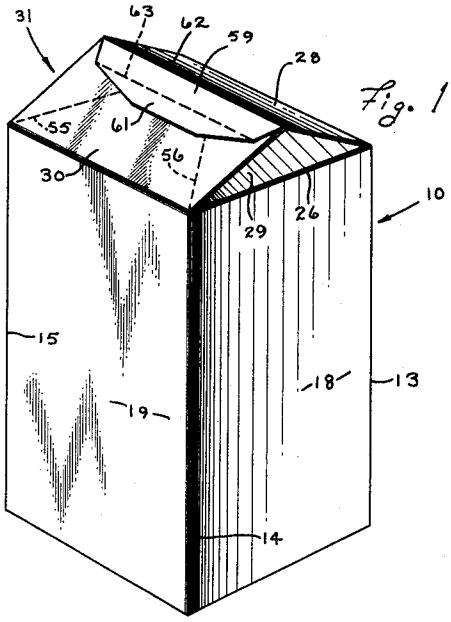

Fig. 1

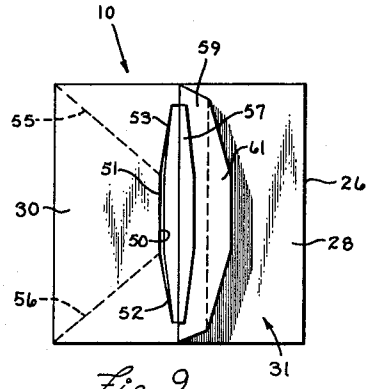

Fig. 9

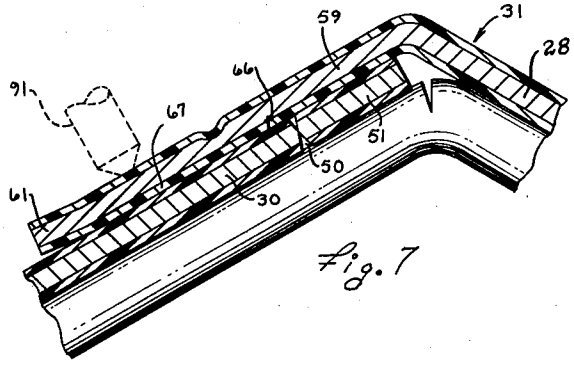

Fig. 7

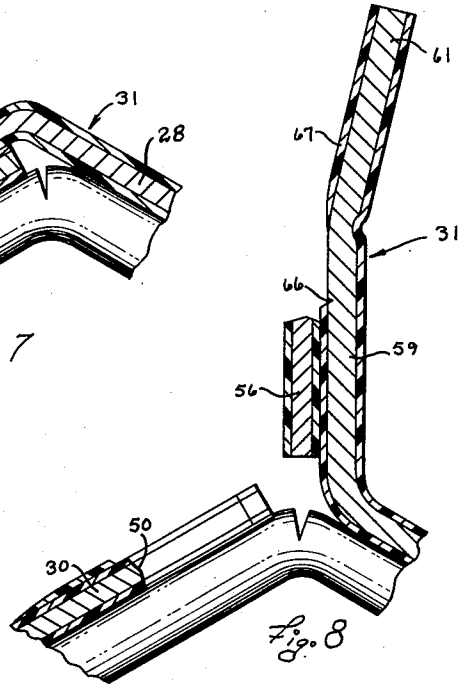

Fig. 8

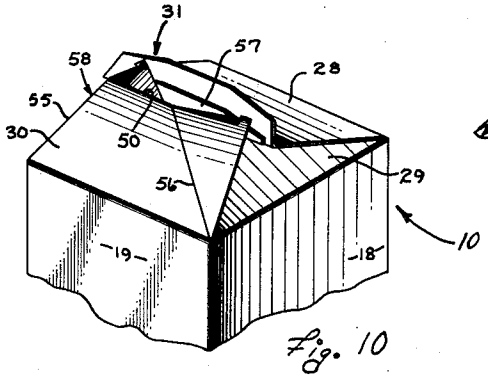

Fig. 10

INVENTOR.
NORMAN A. KELLY
BY
Woodhams, Blanchard and Flynn
ATTORNEYS

Dec. 22, 1964 N. A. KELLY 3,162,349

CONTAINER CLOSURE CONSTRUCTION

Filed Oct. 23, 1961 4 Sheets-Sheet 2

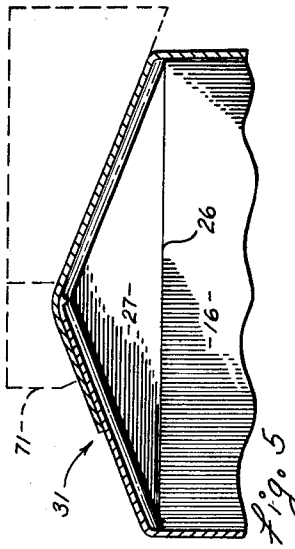

Fig. 5

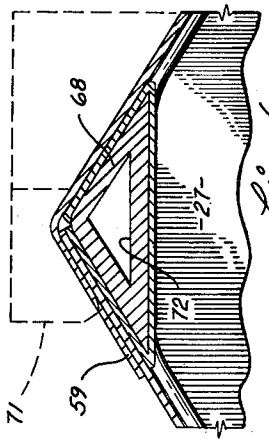

Fig. 6

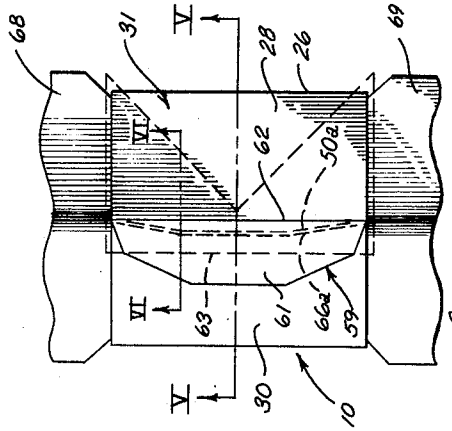

Fig. 4

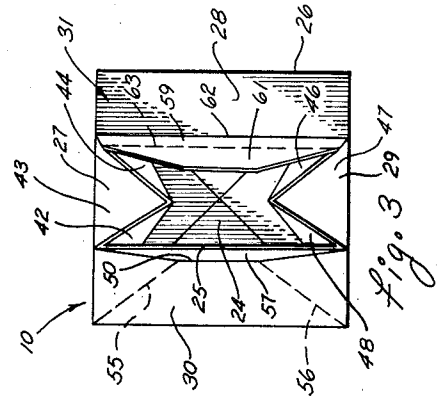

Fig. 3

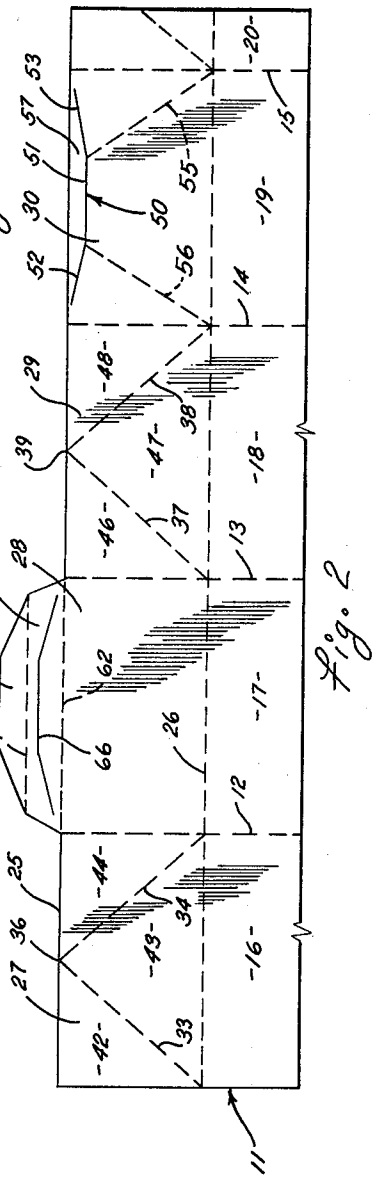

Fig. 2

INVENTOR.
NORMAN A. KELLEY

BY
Woodhams Blanchard & Flynn

Dec. 22, 1964 N. A. KELLY 3,162,349

CONTAINER CLOSURE CONSTRUCTION

Filed Oct. 23, 1961 4 Sheets-Sheet 3

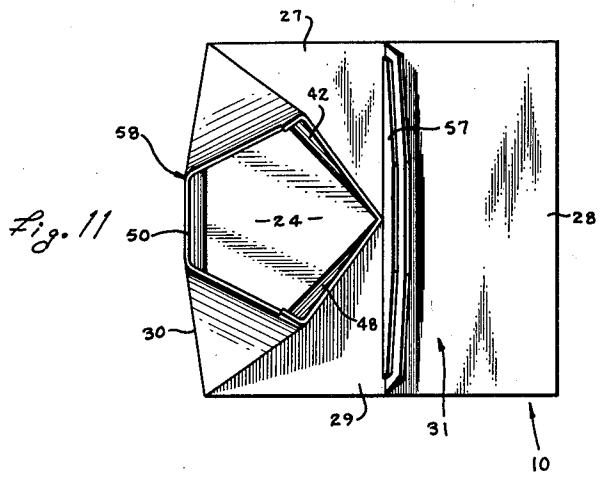

Fig. 11

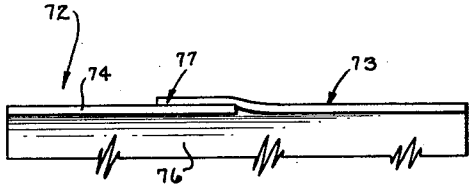

Fig. 12

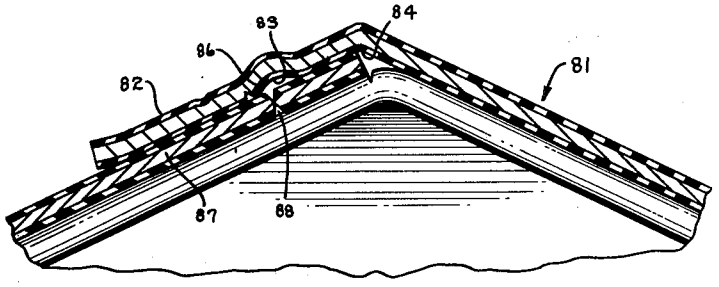

Fig. 14

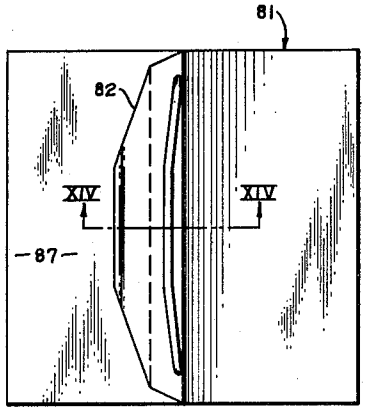

Fig. 13

INVENTOR.
NORMAN A. KELLY
BY
Woodhams, Blanchard & Flynn
ATTORNEYS

Dec. 22, 1964 N. A. KELLY 3,162,349

CONTAINER CLOSURE CONSTRUCTION

Filed Oct. 23, 1961 4 Sheets-Sheet 4

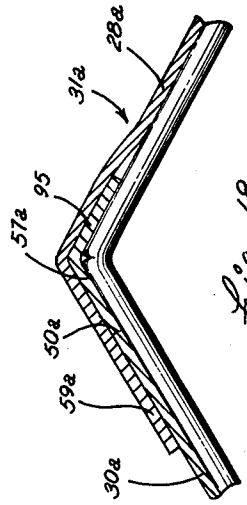

Fig. 18

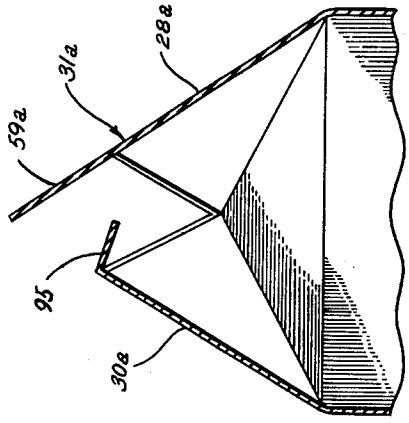

Fig. 17

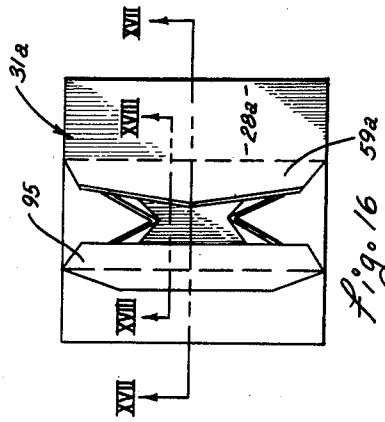

Fig. 16

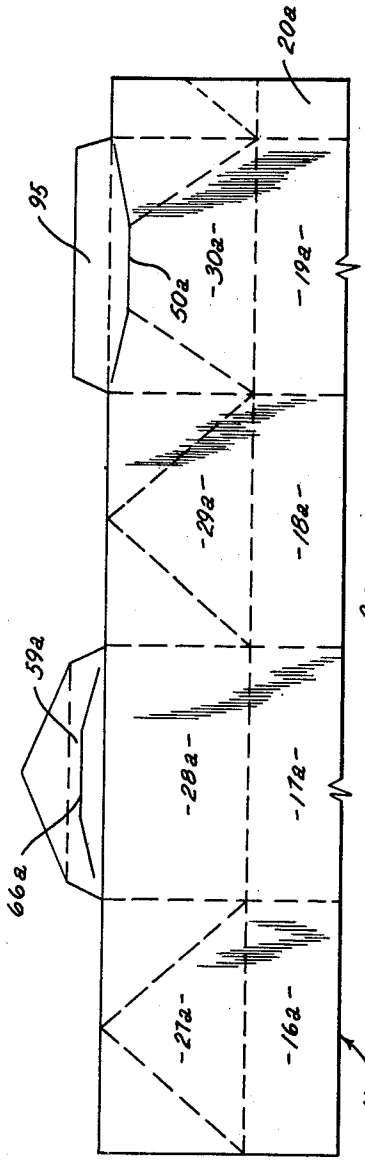

Fig. 15

INVENTOR.
NORMAN A. KELLEY

BY
Woodhams Blanchard & Flynn

United States Patent Office 3,162,349 Patented Dec. 22, 1964

3,162,349

CONTAINER CLOSURE CONSTRUCTION

Norman A. Kelly, Wayne Township, Kosciusko County, Ind., assignor to Crystal Preforming and Packaging, Inc., Warsaw, Ind., a corporation of Indiana

Filed Oct. 23, 1961, Ser. No. 146,964
8 Claims. (Cl. 229—17)

This invention relates in general to a container construction and, more particularly, to a closure structure for a coated, paperboard carton which is capable of holding liquids, such as milk or juice, said closure structure having a self-contained, pouring spout.

Coated paperboard containers or cartons have been widely and successfully used for many years, both commercially and in private homes. An example of such a carton is disclosed in my copending patent application, Serial No. 111,028, entitled "Container Construction." Many different types of coatings, including plastics and usually thermoplastics, have been used for rendering the paperboard containers liquid proof. Polyethylene has been found to be well suited for this purpose because it produces tough, water-tight surfaces which can be sealed together by heating the surfaces to be sealed and simultaneously or subsequently pressing such surfaces together. However, it will be understood that specific reference herein to polyethylene, or to any other specific type of plastic, as a coating is for illustrative purposes only.

However, in using plastic-coated cartons or containers, where the plastic coating is utilized to seal the closure construction, it has been found that certain problems have developed and, prior to applicant's invention, have not been solved. In the first place, it has been found that the cohesion between two plastic coated surfaces which have been sealed together, or the adhesion of the plastic coating to the adjacent fibers in the paperboard, is greater than the cohesion of the uncoated fibers in the paperboard. Thus, when two sealed panels of the closure structure are pulled apart to open the carton, the separation often results in the peeling off of a layer or lamina from one of the panels, so that it remains on the other panel. It is at least difficult, if not impossible, to control or predict the manner in which the layer, including the plastic coatings, will separate from one panel and remain with the other. This type of separation often results in a ragged, fuzzy edge along the discharge end of the integral pouring spout on the carton. This fuzzy edge not only detracts from the appearance and utility of the spout, but also creates an unsanitary and messy condition around the closure structure.

Accordingly, the primary objects of this invention include the provision of a coated container having a closure structure which is easy to preform, which permits easy filling of the container, which is easy to close and seal, which has an integral spout, which is neat and pleasing in appearance, and which can be easily opened for immediate use without producing an unsightly, unsanitary and ragged edge at the outer end of the pouring spout.

A further object of this invention has been the provision of a closure structure, as aforesaid, which can be easily fabricated, which is relatively inexpensive to manufacture and which requires no more material than existing closure structures for coated paperboard cartons of the same general type.

Other objects and purposes of this invention will become apparent to persons familiar with this type of product upon reading the following descriptive material and examining the acompanying drawings, in which:

FIGURE 1 is a perspective view of a container embodying the closure structure of the invention.

FIGURE 2 is a fragmentary plan view of a container

blank from which a container having said closure structure can be fashioned.

FIGURE 3 is a top view of said container with the closure structure in a partially closed condition.

FIGURE 4 is a top view of said closure structure in its closed condition.

FIGURE 5 is a sectional view taken along the line V—V in FIGURE 4.

FIGURE 6 is a sectional view taken along the line VI—VI in FIGURE 4.

FIGURE 7 is an enlarged fragment of the structure appearing in FIGURE 5.

FIGURE 8 is a fragment of FIGURE 7 with the flap of the closure structure in the raised position.

FIGURE 9 is a top view of said container construction with said closure flap in the open or raised position.

FIGURE 10 is a fragment of the container appearing in FIGURE 1 with the spout thereof in the open position.

FIGURE 11 is a top view of the container with the spout opened, as appearing in FIGURE 10.

FIGURE 12 illustrates the upper portion of a container having an alternate closure structure with a flat top.

FIGURE 13 discloses a modified closure structure for a container with a gabled top.

FIGURE 14 is a sectional view taken along the line XIV—XIV in FIGURE 13.

FIGURE 15 is a fragmentary plan view of a modified container blank.

FIGURE 16 is a top view of a partially closed container formed from the modified container blank shown in FIGURE 15.

FIGURE 17 is a sectional view taken along the line XVII—XVII in FIGURE 16.

FIGURE 18 is a sectional view taken along the line XVIII—XVIII in FIGURE 16 with the closure structure of the container in a different position.

For convenience in description, the terms "upper," "lower" and words of similar import will have reference to the container and closure structure of the invention as appearing in FIGURES 1, 5 and 7. The terms "front," "rear" and words of similar import will have reference to the left and right sides, respectively, of the container and closure structure as appearing in FIGURES 3, 4 and 5. The terms "inner," "outer" and derivatives thereof will have reference to the geometric center of said container or said closure structure and parts thereof.

General Description

The objects and purposes of the invention, including those set forth above, have been met by providing a container construction which is preferably fashioned from a flat blank cut from a coated sheet of paperboard or the like. The coating on said paperboard preferably contains at least a very substantial amount of plastic material, which is preferably heat sealable, such as, for example, polyethylene. The container has four side panels and a bottom wall arranged to define a rectangular compartment which preferably, but not necessarily, has a square cross section. The container has a closure structure fashioned from four end panels integral with said side panels and extending from the upper ends thereof a distance which, in one preferred embodiment, is slightly greater than half the perpendicular distance between a pair of opposing side panels, thereby giving the container a gabled top. The end panels, which are substantially rectangular, are connected along their adjacent edges and are scored for folding into positions where their upper edges are adjacent each other, substantially parallel and partly overlapping.

One of the end panels has an integral flap extending from the free edge thereof so that it overlays the upper

edges of the other end panels and is secured to the outer surface of the opposite end panel near its upper edge when the closure structure is sealed. The opposite end panels has a slit therethrough which extends lengthwise of and adjacent its upper free edge. The inner surface of the flap has a cut which extends along, and is adjacent to, the split in said opposite end panel when said flap is in sealed relationship with said opposite end panel. An integral pouring spout is formed from said opposite end panel when the closure structure is opened.

Detailed Description

The container **10** (FIGURE 1), which illustrates a preferred embodiment of the invention, is fashioned from a blank **11** (FIGURE 2) which is cut from a sheet of coated paperboard or the like. The said sheet material, hence the container blank cut therefrom, may be comprised of heavy paper stock or similar, suitable sheet material which is sufficiently stiff to be not only self supporting, but also capable of withstanding reasonable amounts of rough handling without collapsing, particularly after the blank has been fashioned into the container **10**. In this particular embodiment, the sheet material is preferably coated with a composition including a heat sealable plastic material, such as polyethylene, which may be compounded with other ingredients or additives for the purpose of improving the adhesive or other qualities of the composition. That is, the plastic coating must be capable of achieving a strong adhesive bond with the paper stock and a strong cohesive bond when portions of the coated sheet material are heated and then firmly held together while the seal forms therebetween. It is also contemplated that the coating, such as a plastic, on the paperboard can be a pressure sensitive material or a combined heat and pressure sensitive material, whereby the sealing together of the end panels is effected at least partially by pressure. Under some circumstances, where the container blank has the appropriate plastic coating, it may be desirable to effect such sealing by applying a solvent to all or some of the surfaces between which a seal is desired and then holding the surfaces together until the solvent evaporates and the seal is formed.

The blank **11** (FIGURE 2) is impressed, in a manner which may be conventional, with a plurality of transverse, parallel and spaced fold or score lines **12**, **13**, **14**, and **15** which divide the blank **11** into four side walls or panels **16**, **17**, **18** and **19**, respectively, and an edge tab **20** which is integral with the side panel **19**. The edge tab **20** and the free, lengthwise edge portion of the side wall **16** are heated and pressed together when the container is assembled from the blank **11**. A bottom wall **24** (FIGURE 3) is formed from the blank **11** by folding a lengthwise edge portion (not shown) of said blank inwardly into a substantially flat position perpendicular to said sidewalls in a substantially conventional manner. A bottom wall of this type is disclosed in more detail in said patent application, Serial No. 111,028.

The blank **11** (FIGURE 2) has a lengthwise fold or score line **26** which is spaced from and substantially parallel with the upper lengthwise edge **25** of the blank **11**. The score line **26** intersects the score lines **12** through **15** perpendicularly to define therewith the upper end panels **27**, **28**, **29** and **30**, which are integral with the side panels **16**, **17**, **18** and **19**, respectively, and form the principal parts of the closure structure **31**.

In this particular embodiment, the perpendicular distances between the adjacent score lines **12**, **13**, **14** and **15** (FIGURE 2) is substantially equal so that the erected container **10** (FIGURE 1) has a substantially square cross section. The end panels (FIGURE 2) are rectangular and extend away from the score line **26** the same distance, which is preferably somewhat greater than the distance between adjacent pairs of the score lines **12** through **15**. The end panel **27** has a pair of fold lines **33** and **34** which converge toward the midpoint **36** in the upper edge of the end panel **27** from the opposite ends of that portion of

the score line **26** extending between said end panel **27** and the side panel **16**. The end panel **29** has a pair of fold lines **37** and **38** which converge toward the midpoint **39** in the upper edge of the panel **29** from the intersections of the score lines **13** and **14** with the score line **26**. The fold lines **33** and **34** combine with the score lines **12** and **26** to divide the end panel **27** into three triangular portions **42**, **43** and **44**. The fold lines **37** and **38** combine with the score lines **13**, **14** and **26** to divide the end panel **29** into three triangular portions **46**, **47** and **48**.

The end panel **30** (FIGURES 2, 7, 8 and 9) has therethrough an elongated slit **50** which is near to, but spaced from, and extends along the upper edge of the end panel **30**, hence the edge **25** of the blank **11**. The slit **50** (FIGURE 2) has a central portion **51**, which is substantially parallel with the score line **26** and with the edge **25** of the blank **11**. The slit **50** also has two flanking portions **52** and **53** which slope upwardly away from the opposite ends of the central portions **51** toward the intersections of the score lines **14** and **15**, respectively, with the edge **25** of the blank. Said end panel **30** has a pair of fold lines **55** and **56** which diverge respectively from the opposite ends of the central portion **51** of the slit **50** to the intersections of the score lines **14** and **15** with the score line **26**. As shown in FIGURES 2 and 8, the distance between the edge **25** of the blank **11** and the ends of the slit **50** is preferably small. More specifically, the slit **50** is arranged so that the strip **57** of coated paperboard between the slit **50** and edge **25** will remain in position during the forming of the carton from a blank **11**. However, the strip **57** will tear away at its opposite ends from the end panel **30** when the carton is opened and a spout **58** (FIGURES 10 and 11) is formed with the end panel **30** in a manner discussed hereinafter.

The end panel **28** (FIGURES 2, 4 and 7) has an integral sealing flap **59** which extends from the upper edge thereof. The sealing flap **59** preferably includes a small, manually engageable and integral tab **61** along the upper edge portion thereof. In order to improve the hinging action of the sealing flap **59** and its integral tab **61**, preferably parallel fold lines **62** and **63** are impressed into the sealing flap **59**. The fold line **62** defines the junction between the sealing flap **59** and the end panel **28**.

The lower or inner surface of the sealing flap **59** (FIGURES 2, 4, and 7) has an elongated cut **66** which preferably penetrates completely through the plastic coating **67** on the inner surface of the sealing flap **59**, but does not pass entirely through the flap. The cut **66**, as shown in broken lines at **66***a* in FIGURE 4, has substantially the same shape as the slit **50** in the end panel **30**. Said cut **66** is, however, slightly longer than the slit **50** and is spaced from the fold line **62** slightly further than the distance between the slit **50** and the edge **25** of the carton. Thus, when the closure structure **31** is in its closed position (FIGURE 4), the cut **66***a* is located slightly below or outwardly of the slit **50***a*, for reasons appearing hereinafter.

The forming and sealing of the closure structure **31** may be accomplished by means including a pair of backing members **68** and **69** and a pressure plate **71** in a manner discussed hereinafter. The backing members and/or pressure plate may be provided with coolant cavities as indicated at **72** with respect to the backing member **68** in FIGURE 6.

Assembly and Operation

The container **10** (FIGURE 1) may be assembled from a blank **11** (FIGURE 2) by first folding said blank along the score lines **12**, **13**, **14** and **15** and then securing the edge tab **20**, along the entire length thereof, to the free edge portion of the blank **11** at the opposite end thereof adjacent the side wall **16**. The securement of the edge tab **20** to the opposite end of the blank **11** may be effected by applying radiant heat, for example, to the thermoplastic coating thereon in a well known manner and then pressing them together until the heated coating sets and

forms a bond. The bottom wall 24 may be formed from edge portions of the blank 11 by applying heat and pressure thereto, as set forth more specifically in said patent application, Serial No. 111,028.

The closure structure 31 (FIGURES 1, 3, 4, 9 and 10), which includes those portions of the blank 11 above the score line 26, is preferably formed by causing the triangularly shaped, opposing tips of the backing members 68 and 69 to engage the end panels 27 and 29 and bend them inwardly so that they fold along the score line 26 and the fold lines 33, 34, 37 and 38. More specifically, the triangular portions 43 and 47 on the end panels 27 and 29 are engaged by the backing members 68 and 69 which are preferably supported so that they pivot the end panels inwardly and downwardly around the score line 26 through the positions shown in FIGURE 3 and into the positions shown in FIGURE 11. Such movement of the end panels 27 and 29 causes them to bend along the fold lines 33, 34, 37 and 38, respectively. At the same time the end panels 28 and 30 are moved into positions adjacent to and parallel with the triangular portions 42, 44, 46 and 48.

After the end panels 27, 28, 29 and 30 have been bent or "prebroken" as described above, they may be held in this position by a "spot" sealing operation. That is, one or more electrically heated elements, one of which is shown by broken lines at 91 in FIGURE 7, may be pressed against the top surface of the flap 59 while the backing members are still in their positions of FIGURE 4. This procedure will soften the plastic coatings on the adjacent surfaces of the flap 59 and panel 30 at the small spots under the elements 91 so that the flap is tacked to the end panel 30 and the closure structure 31 is lightly held in the closed position. The container is easily opened merely by raising the flap and the taking operation does not adversely affect the ability of the closure structure 31 to be sealed after it has been filled.

If the container 10 is to be filled immediately after the "prebreak" operation by the members 68 and 69, said members are moved away from the panels 27 and 29 without the tacking operation and the closure structure will normally assume a position about as shown in FIGURE 3. The container 10 is then filled with liquid by any conventional apparatus for this purpose.

While the closure structure 31 remains in its position of FIGURE 3, heat may be applied to portions thereof to soften the thermoplastic coating along selected portions of the blank 11 (FIGURE 2) adjacent its edge 25 on the lower surface of the sealing flap 59. Specifically, said plastic coating is softened on the inner surfaces of the triangular portions 44 and 46 and the corresponding, inner surfaces on the end panel 28, which are engaged by said triangular portions 44 and 46. The coating on the engaging surfaces of the triangular portions 42 and 48 of the end panel 30 are also softened. The lower surface of the sealing flap 59, except for the tip of the tab 61, is softened. Normally, this softening will be accomplished by radiant heat only after the container has been filled.

After the heating and softening of the plastic are accomplished, means such as the backing members 68 and 69 are moved against the end panels 27 and 29 so that the closure structure 31 is moved into its FIGURE 4 positions. The pressure plate 71 (FIGURES 5 and 6) is then brought down upon the upper surface of the end panel 28 and the sealing flap 59 where it is held until the softened, plastic coating has set and a bond has formed between the adjacent coated surfaces. The plate 71 is then raised and the members 68 and 69 are moved sidewardly away from the sealed container which is now sealed for safe shipment.

It has been found that the heating and setting of the thermoplastic coating will not cause the coating to bridge the breaks therein produced by the slit 50 and cut 66 (FIGURE 7) on their respective surfaces. This is an important feature because it assures the presence of a clean, sharp edge at the outer end of the pouring spout 58, when the closure structure 31 is opened. However, the engaged surfaces of the end panel 30 and the flap 59 are firmly bonded together on opposite sides of the cut 66 and the slit 50 so that a secure, liquid tight sealing of the closure structure 31 is effected. The bonds between the various engaged surfaces of the closure structure must be positively and intentionally broken, as described hereinafter, to open the container.

When it becomes desirable to open the closure structure 31 of the container 10 the tab 61 is manually engaged and raised until the sealing flap 59 is pulled away from the panel 30. Under normal circumstances, the cohesion between the coatings on the sealing flap 59 and end panel 30 is greater than the adhesion between such coatings and the paperboard or the like which they coat. Accordingly, as the sealing flap 59 is pulled or peeled upwardly from its FIGURE 7 position into its FIGURE 8 position, the two plastic coatings will normally remain together and will pull away from either the flap or the end panel and remain with the other. For illustration purposes, the combined coatings are shown in FIGURE 8 as remaining secured to the end panel 30 and peeled away from the sealing flap 59.

It will be seen that if it were not for the cut 66, this peeling of the coatings from the sealing flap 59 would continue along the sealing flap 59 so that the closure structure would actually remain closed by the film of plastic coating and the layer of adjacent cardboard fibers secured thereto. Thus, it would be necessary to perforate this film of plastic coating before the spout 58 (FIGURE 10) could be formed. Moreover, the strip 57 (FIGURE 8) along the upper edge of the end panel 30 would not be removed with the sealing flap 59, as desired. However, in the structure of the invention, the cut 66 terminates this tearing or peeling action immediately adjacent the slit 50 so that the strip 57 can move upwardly with the sealing flap 59 and torn away at its opposite ends from the remainder of the end panel 30, as shown in FIGURES 8 and 9. Accordingly, a clean, sharp pouring edge is provided along the upper edge of the end panel 30 where the spout 58 (FIGURES 10 and 11) terminates.

The spout 58 (FIGURES 10 and 11) is formed by manually engaging the opposite, side edges of the end panel 30, as between the thumb and forefinger, and moving them toward each other and upwardly away from the remainder of the closure structure 31. This causes the end panel 30 to bend along the fold lines 55 and 56 and form said spout, whereby the contents of the container 10 can be guided as they are discharged therefrom.

If some of the contents, such as a liquid, remain in the container 10 after the pouring operation, the spout 58 can be pressed back into its FIGURE 9 position. Normally, there is sufficient strength in the sealing flap 59 that it will hold the spout down so that the container 10 can be fully closed and the contents thereof will be protected against contamination by the accidental entry of foreign materials into the container through the closure structure 31.

It will be obvious from the above description that the adjacent coatings on the sealing flap 59 (FIGURE 7) and end panel 30 will adhere to the sealing flap 59 and tear or peel away from the end panel 30. In such case, the tearing will be terminated when it reaches the slit 50 so that, as in the previously described situation, the strip 57 will be lifted away from the end panel 30 by the sealing flap 59 and the pouring spout 58 will still have a clean, sharp and sanitary edge at its outer end.

Alternate Structure

FIGURE 12 is a fragmentary illustration of the upper end, only, of a modified container 72 having a closure structure 73 which may be identical with the closure structure 31 except that it is flat instead of gabled. In

order to effect this flat configuration each end panel **74** of the closure structure **73** extends away from its respective side panel **76** a distance approximately equal to half the perpendicular distance between its side panel and the opposite side panel when the container is erected. In all other respects, and particularly with regard to the sealing flap **77**, the modified closure structure **73** may be substantially identical to the closure structure **31**.

In a further modification of the applicant's invention (FIGURES 13 and 14) the closure structure **81** includes a sealing flap **82** having an elongated concavity **83** in the lower surface **84** thereof, which concavity is located so that the coating **86** on the lower surface **84** is spaced from the upper surface of the end panel **87** adjacent to, and on both sides of, the slit **88** therein.

Except for the modification produced by the concavity in the sealing flap **82**, the closure structure **81** may be substantially identical with the closure structure **31** described above in detail. It has been found that the concavity **83** in the sealing flap **82** tends to enhance a clean separation of the sealing flap **82** from the end panel **87** adjacent the slit **88** when the closure structure is opened, thereby insuring a clean, sharp pouring edge on the pouring spout.

The modified carton blank **11***a* shown in FIGURE 15 is, in this particular embodiment, substantially identical with the carton blank **11** (FIGURE 2) except for the end tab **95**, which has been added to the end panel **30***a* in the blank **11***a*. That is, the carton blank **11***a* has side panels **16***a*, **17***a*, **18***a* and **19***a*, and an edge tab **20***a*. The carton blank **11***a* also has end panels **27***a*, **28***a*, and **29***a* in addition to the afore-mentioned end panel **30***a*. The sealing flap **59***a* extends from the upper edge of the end panel **28***a* and has a cut **66***a* corresponding to the cut **66** in the flap **59** of the carton blank **11**.

As shown in FIGURES 16, 17 and 18, the end tab **95** is moved under the upper edge of the end panel **28***a* as the closure structure **31***a* is moved from its FIGURE 17 position into its closed position of FIGURE 18. In all other respects the closure structure **31***a* is preferably the same as the closure structure **31** (FIGURE 5). That is, the sealing flap **59***a* is folded downwardly over, and is then heat-sealed to, the upper surface of the end panel **30***a* near the upper edge thereof.

The end panel **30***a* (FIGURE 18) has an elongated cut **50***a* through it, which permits the separation of the upper edge portion **57***a* and the attached end tab **95** from the remainder of the end panel **30***a* when the sealing flap **59***a* is raised and separated from the end panel **30***a* to open the closure structure **31***a*. Thus, except for the presence or end tab **95**, which is sealed to the lower surface of the end panel **28***a* (FIGURE 18) during the closing and sealing operation, the opened closure structure **31***a* will look substantially the same, and operate exactly the same, as the closure structure **31**, as appearing in FIGURES 10 and 11. However, the end tab **95** increases the strength of the sealed closure structure **31***a* (FIGURE 18) and also provides additional resistance to leakage along, and at the ends of, the ridge on the closure structure.

Although particular preferred embodiments in the invention have been disclosed above for illustrative purposes, it will be understood that variations or modifications of such disclosure, which come within the scope of the appended claims, are fully contemplated.

What is claimed is:

1. In a container construction fashioned from a blank of plastic coated paperboard or the like, said container construction including four side walls and a bottom wall capable of defining a substantially rectangular compartment, a gabeled closure structure for said container construction comprising:

four substantially rectangular panels integral with and substantially equidistantly from the upper ends of the side walls, the junctions between said panels and said side walls being defined by first fold lines lying substantially within a plane substantially parallel with the bottom wall, each panel being connected to the adjacent panels and such connections being defined by second fold lines transverse of said first fold lines, and each panel extending from its first fold line a distance at least approximately equal to half the length of a first fold line associated with an adjacent panel, said distance being no greater than said length of said first fold line;

means defining a slit through at least substantially the entire thickness of one panel adjacent to and extending substantially the full length of the free, upper edge of said one end panel between points near the second fold lines adjacent said one panel;

means defining in said one panel and in the two panels adjacent said one panel a pair of fold lines converging from the opposite ends of the adjacent first fold line toward the midpoint in the free edge of the respective panel, the converging fold lines in said one panel terminating at said slit to form a pouring spout from said one panel when said one panel is moved away from said opposite panel;

a flap integral with and extending from the free edge of the panel opposite said one panel, the inner surface of said flap being engageable with the upper edge portion of said one panel and overlying said slit, and said one panel and said opposite panel converging upwardly from their respective first fold lines so that their upper edges are in adjacent and substantially abutting relationship to each other when said panels are bent along said fold lines toward each other to form the closure structure; and

means defining an elongated cut in said inner surface of said flap arranged to extend along said slit adjacent thereto and on the opposite side thereof from the upper free edge of said one panel when said flap is overlying said slit, said cut penetrating only partway through the flap and at least substantially through the coating on said inner surface of said flap.

2. The structure of claim 1 wherein said slit and said cut have central portions parallel with their respective first fold lines and end portions which diverge from said first fold lines away from said central portions.

3. The structure of claim 1 wherein each of said panels extends from its first fold line a distance greater than half the length of the first fold line associated with an adjacent panel; and

wherein said converging fold lines on said one panel terminate at a pair of spaced points along the slit through said one panel.

4. The structure of claim 1 wherein the lower surface of said flap and the adjacent upper edge portion of the one panel have thermoplastic coatings whereby said flap is secured upon said edge portion; and

wherein said slit and the free edge of said one panel define a strip;

wherein said strip is secured to said flap when said flap is overlying said portion of said one panel, whereby said strip is removed from said one panel when said flap is separated from said one panel to form a pouring edge for said spout.

5. The structure of claim 1 wherein said flap has an elongated concavity in said lower surface thereof between said cut and the adjacent edge of said opposite end panel, said concavity being located to bridge said slit when said lower surface is against said one end panel and the free edges of said end panels are in substantially adjacent positions.

6. The structure of claim 1 including an end tab integral with and extending from said upper edge of said one end panel, said end tab extending lengthwise of said upper edge between the second fold lines adjacent said one end panel.

7. In a container construction fashioned from a blank of plastic coated paperboard or the like, said container construction including four side walls and a bottom wall

capable of defining a substantially rectangular compartment, a gabled closure structure for said container construction comprising:

four substantially rectangular panels integral with and extending substantially equidistantly from the upper ends of the side walls, the junctions between said panels and said side walls being defined by first fold lines lying substantially within a plane substantially parallel with the bottom wall, each panel being connected to the adjacent panels and such connections being defined by second fold lines transverse of said first fold lines, and two opposite end panels extending from their first fold lines a distance substantially greater than half the length of a first fold line associated with an adjacent panel;

means defining a slit through at least substantially the entire thickness of one of said two opposite end panels adjacent to, substantially parallel with and extending substantially the full length of the upper edge of said one end panel;

means defining in said one end panel and in said two panels adjacent said one end panel a pair of fold lines coverging from the opposite ends of their adjacent first fold lines toward the mid point in the upper edges of the respective panels, the converging fold lines in said one panel extending to said slit to form a pouring spout from said one panel when said one panel is moved away from the other one of said two opposite panels;

a flap integral with and extending from the upper edge of the other of said two end panels, the inner surface of said flap being engageable with the upper edge portion of said one end panel and overlying said slit, said two end panels converging upwardly from their respective first fold lines so that their upper edges are adjacent and in substantially abutting relationship to each other when said panels are bent along their fold lines toward each other to form the closure structure; and

means defining an elongated cut in said inner surface of said flap arranged to extend along said slit adjacent thereto and on the opposite side thereof from the upper edge of said one panel when said flap is overlying said slit, said cut penetrating only partway through the flap and at least substantially through the coating on said inner surface of said flap.

8. In a container construction fashioned from a blank of plastic-coated paperboard or the like, said container construction including four side walls and a bottom wall capable of defining a substantially rectangular compartment, a gabled closure structure for said container construction comprising:

four substantially rectangular panels integral with and extending approximately the same distance from the upper ends of the side walls, the junctions between said panels and said side walls being defined by first fold lines lying substantially within a plane substantially parallel with the bottom wall, each panel being connected to the adjacent panels and such connections being defined by second fold lines transverse of said first fold lines, and two opposite end panels extending from their first fold lines a distance substantially greater than half the length of a first fold line associated with an adjacent panel;

means defining an elongated slit through at least substantially the entire thickness of one of said two opposite end panels adjacent to, and extending along, substantially the full length of the upper edge of said one end panel;

means defining in said one end panel and in said two panels adjacent said one end panel a pair of fold lines converging from the opposite ends of their adjacent first fold lines toward the mid point in the upper edges of the respective panels, the converging fold lines in said one panel extending to said slit to form a pouring spout from said one panel when said one panel is moved away from the other one of said two opposite panels;

a flap integral with and extending from the upper edge of the other of said two end panels, the inner surface of said flap being engageable with the upper edge portion of said one end panel and overlying said slit, said two end panels converging upwardly from their respective first fold lines so that their upper edges are adjacent and in substantially abutting relationship to each other when said panels are bent along their fold lines toward each other to form the closure structure; and

means defining an elongated cut in said inner surface of said flap arranged to extend along and adjacent said slit when said flap is overlying said slit, said cut penetrating only partway through the flap and at least substantially through the coating on said inner surface of said flap.

References Cited in the file of this patent

UNITED STATES PATENTS

2,329,797	Strack	Sept. 21, 1943
2,751,137	Alden	June 19, 1956
2,826,349	Hovland	Mar. 11, 1958
2,880,924	Moore	Apr. 7, 1959
2,993,630	Cox	July 25, 1961
3,039,668	Kuchenbecker	June 19, 1962

FOREIGN PATENTS

225,010	Australia	Mar. 5, 1959
631,679	Great Britain	Nov. 8, 1949
676,531	Great Britain	July 30, 1952
639,205	Great Britain	June 21, 1950

OTHER REFERENCES

German Application Serial No. G-10,353, Aug. 30, 1956.

UNITED STATES PATENT OFFICE

CERTIFICATE OF CORRECTION

Patent No. 3,162,349 December 22, 1964

Norman A. Kelly

It is hereby certified that error appears in the above numbered patent requiring correction and that the said Letters Patent should read as corrected below.

Column 3, line 4, for "panels" read -- panel --; line 7, for "split" read -- slit --; column 5, line 35, for "taking" read -- tacking --; column 7, line 73, before "substantially" insert -- extending --.

Signed and sealed this 1st day of June 1965.

(SEAL)
Attest:

ERNEST W. SWIDER
Attesting Officer

EDWARD J. BRENNER
Commissioner of Patents