No. 622,258. Patented Apr. 4, 1899.

B. E. PEASE.

FIRING MECHANISM FOR GUNS.

(Application filed July 12, 1898.)

(No Model.)

Fig. 1.

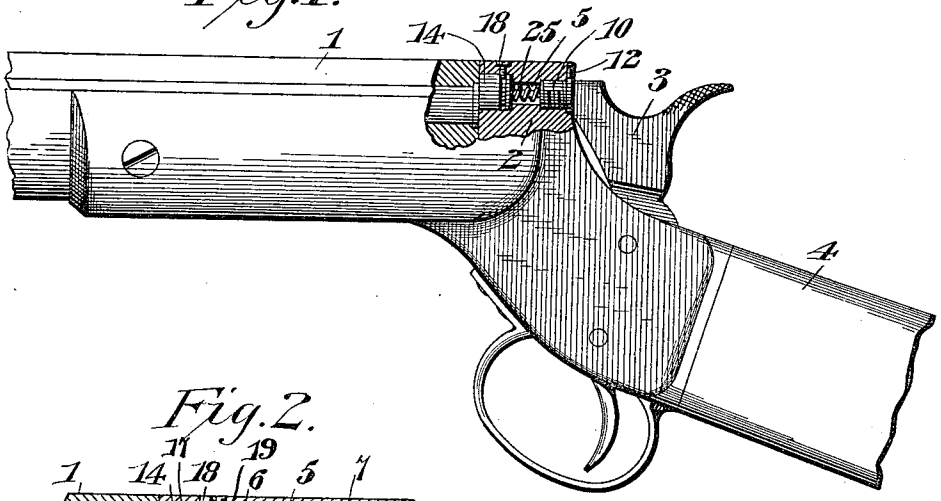

Fig. 2.

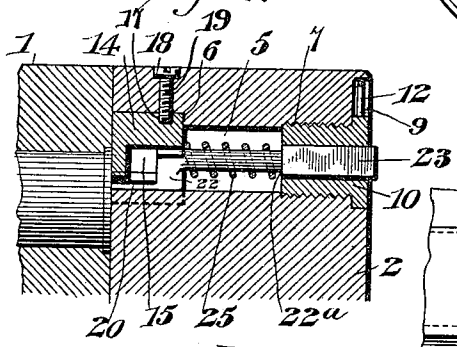

Fig. 4.

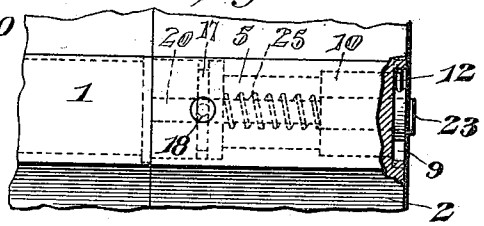

Fig. 3.

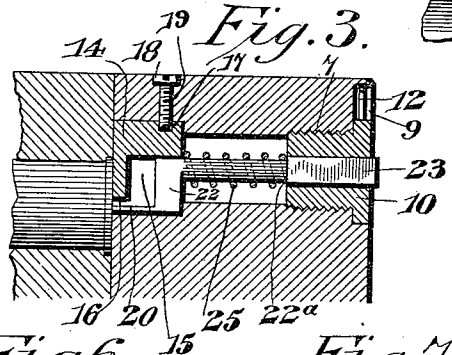

Fig. 5.

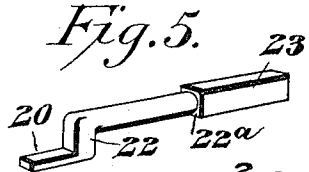

Fig. 8.

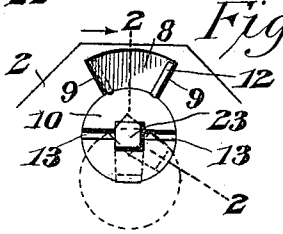

Fig. 6.

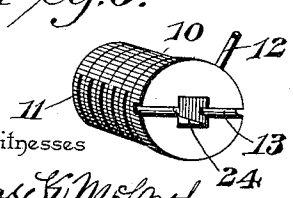

Fig. 7.

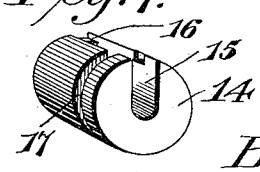

Witnesses

Jas. K. McCathran

H. F. Beuchard

Brice E. Pease, Inventor

By his Attorneys,

C. A. Snow & Co.

THE NORRIS PETERS CO., PHOTO-LITHO., WASHINGTON, D. C.

UNITED STATES PATENT OFFICE.

BRICE E. PEASE, OF GILMANTON, NEW HAMPSHIRE.

FIRING MECHANISM FOR GUNS.

SPECIFICATION forming part of Letters Patent No. 622,258, dated April 4, 1899.

Application filed July 12, 1898. Serial No. 685,780. (No model.)

To all whom it may concern:

Be it known that I, BRICE E. PEASE, a citizen of the United States, residing at Gilmanton, in the county of Belknap and State of New Hampshire, have invented a new and useful Firing Mechanism for Guns, of which the following is a specification.

My invention relates to improvements in firing mechanism for breech-loading guns, such as rifles and the like; and the object that I have in view is to provide a simple construction which may be readily and quickly adjusted to explode a cartridge either by rim-fire or a central fire, thus adapting the arm for use on different kinds of cartridges and changing the range of the gun according to the character of the cartridge employed.

A further object of the invention is to provide an improved construction in which the parts may be readlly assembled for service, easily detached for inspection and repairs, and are of such simple construction that they are not liable to get out of order, and thus remain efficient and reliable in action.

With these ends in view the invention consists in the combination, with a standing breech, of an axially-adjustable bushing fitted thereto, a plug also supported in the standing breech and provided with an opening, and a firing-pin slidably fitted to the bushing for axial adjustment therewith and connected with the plug to operatively connect the latter with the bushing for adjustment simultaneously therewith.

The invention further consists in the novel construction and arrangement of parts, which will be hereinafter fully described and claimed.

To enable others to understand the invention, I have illustrated the preferred embodiment thereof in the accompanying drawings, forming a part of this specification, and in which—

Figure 1 is a side elevation of a portion of a breech-loading rifle with my improved firing mechanism embodied therein. Fig. 2 is a vertical longitudinal section of the standing breech, a portion of the barrel, and the adjustable bushing and showing the firing-pin in elevation and adjusted to a position for exploding a rim-fire cartridge. Fig. 3 is a similar sectional view showing the firing-pin adjusted to explode a central-fire cartridge. Fig. 4 is a plan view of the standing breech with the axially-adjustable bushing fitted thereto. Fig. 5 is a detail perspective view of the firing-pin forming a part of my invention. Figs. 6 and 7 are detail perspective views of the bushing and the guide-plug, respectively. Fig. 8 is an end view showing the position of the bushing and firing-pin by dotted and full lines.

Like numerals of reference denote like and corresponding parts in each of the several figures of the drawings.

1 designates a portion of a rifle-barrel. 2 is the standing breech, 3 the hammer, and 4 a portion of the stock. All these parts are ordinary in the art, and no novelty therefor is claimed herein.

The present invention resides in the improved construction of the firing-pin, and I will now proceed to describe in detail the peculiar formation of the standing breech and the parts associated therewith.

The standing breech 2 is formed with a longitudinal bore 5, the axis of which is eccentric and parallel to the longitudinal axis of the barrel. The front part of the bore 5 is of larger diameter than the rear part thereof, thus producing between the two parts of the bore an annular shoulder or ledge 6. The rear part of the bore 5, where it opens through the standing breech, is threaded for a portion of its length, as at 7, and in this threaded length of the bore is adapted to be screwed an axially-adjustable bushing, presently referred to. The rear face of the standing breech, which is opposed to the hammer 3, is formed with a quadrantal cavity or recess 8, which lies above the bore 5 and has its smaller lower end opening into said bore. The side edges of this cavity or recess 8 produce the shoulders 9 on the rear face of the standing breech, and these shoulders serve to limit the axial adjustment of the bushing through the medium of a stop-pin which is attached to the bushing and is arranged to play in the cavity or recess 8.

The bushing 10 is of cylindrical form and of a length and diameter to properly fit in the contracted rear portion of the bore 5 in the standing breech, and at or near its front end this bushing is externally screw-threaded, as

at 11, whereby the bushing may be screwed into the threaded portion 7 of the bore, so as to be adjustable axially therein within the limit permitted by the play of the stop-pin 12 between the shoulders of the cavity or recess 8. As the bushing has a threaded engagement with the bore of the standing breech, said bushing is adapted to be held firmly in place within the standing breech. The stop-pin 12 is secured firmly to the bushing to extend outwardly therefrom and play in the cavity or recess 8, and this pin is of sufficient length to permit it to be easily grasped and operated in the cavity of the standing breech, thus placing it within convenient reach of the user. If desired, the exposed rear end of the bushing may be provided with a transverse notch 13 for the reception of a suitable tool by which the bushing may be unscrewed from the breech-block after the stop-pin 12 has been removed for the purpose of detaching the bushing from the gun.

The bushing 10 extends into the bore 5 a proper distance to accommodate a spring for the firing-pin, and in the front portion of this bore, which is of larger diameter than the rear portion that receives the bushing, is loosely fitted an axially-adjustable plug 14. This plug is made of a single piece of metal of cylindrical form and proper diameter to fill the front enlarged portion of the bore, and in the rear face of this plug is produced the recess 15, which extends part way through the plug and terminates in a notch or opening 16, which extends through the front face of the plug at the rim thereof. The length of this plug 14 is less than that of the enlarged front portion of the bore 5, in which the plug is contained, and this construction of the plug and its arrangement within the standing breech provides for the reception of the peculiarly-formed firing-pin and its retracting-spring. The cylindrical plug 14 is formed with a circumferential groove 17, into which extends a stop screw or screws 18, secured in a threaded opening 19, provided in the standing breech 2 in the plane of the annular groove 17 in the plug 14. These screws 18 serve to hold the plug 14 in position within the bore 5 against endwise displacement in the standing breech; but the plug 14 is free to turn on its axis in order to vary the presentation of the working end of the firing-pin to the cartridge.

The firing-pin 20 is shown more clearly by Fig. 5 of the drawings, and it consists of a single piece of metal having a shoulder 22 and a shank 23. The shank is made quite substantial and is polygonal in form, preferably square in cross-section. The shank is slidably fitted in a square or polygonal opening 24, which is produced centrally in the bushing 10. This shank is thus slidably fitted in the bushing to be guided therein and to turn axially therewith, and that portion of the shank which spans the space between the bushing 10 and the plug 14 is rounded or cylindrical to receive a coiled retraction-spring 25. The shoulder 22 extends at a right angle from the rounded portion of the guide-shank, and the firing-pin 20 extends outwardly from the extremity of the shoulder, whereby the firing-pin occupies an eccentric relation to the shank or stem 23. It will be observed that the square or polygonal stem or shank is fitted centrally in the angular opening of the bushing and that the firing-pin is adapted to be applied in the notch or opening 16 of the plug 14. The shoulder and firing-pin are thus received within the recess and notch of the plug, which serves in a measure to guide the parts in the endwise or reciprocating movement of the firing-pin. As the longitudinal bore is eccentric to the axis of the barrel, the adjustment of the bushing to one position will bring the stop-pin 12 in contact with one shoulder 9 and adjust the firing-pin to a position shown by Fig. 2 and by dotted lines in Fig. 8 for exploding a rim-fire cartridge when said firing-pin is acted on by the hammer. To use the firing-pin on a central-fire cartridge, the pin 12 is adjusted to engage with the other shoulder 9, and thereby turn the bushing, the firing-pin, and the plug 14 to a position where the firing-pin lies centrally in relation to the barrel and presents said firing-pin in a position to act against the center of the cartridge, as shown by Fig. 3 and by full lines in Fig. 8.

The firing-pin serves as the means for operatively connecting the plug 14 with the axially-adjustable bushing, and the adjustment of the bushing in one direction or the other is communicated by the firing-pin to the plug. The spring 25 is loosely coiled around the rounded portion of the shank or stem 23, and one end of this spring is seated against the shoulder 22^a, while its other end bears against the plug 14, said shoulder 22^a being formed between the angular and rounded lengths of the shank or stem 23, whereby the spring is adapted to normally retract the firing-pin within the plug 14.

Changes in the form, proportion, size, and the minor details of construction within the scope of the appended claims may be resorted to without departing from the spirit or sacrificing any of the advantages of this invention.

Having thus described the invention, what I claim is—

1. The combination with a standing breech, of an axially-adjustable bushing fitted thereto, a plug also supported in the standing breech and provided with an opening, and a firing-pin slidably fitted to the bushing for axial adjustment therewith and also connected with the plug to operatively connect the latter with the bushing for adjustment simultaneously therewith, substantially as described.

2. The combination of a standing breech provided with a longitudinal bore the axis of which is eccentric to, and parallel with the axis of the barrel, of a threaded bushing screwed into the bore of said standing breech

and having an angular opening, a plug also fitted in the bore and having an eccentric opening in its face, a firing-pin fitted in said opening of the plug and having an angular shank which is slidably fitted in the bushing for axial adjustment therewith, means for retaining the plug against endwise displacement, and a retractor for the firing-pin, substantially as described.

3. The combination of a standing breech provided with a longitudinal bore having an annular shoulder and with a recess forming the stop-shoulders, 9, a threaded bushing screwed into the bore and having an angular opening, an adjusting-pin attached to the bushing and arranged to play in the recess of the standing breech for engagement with the shoulders thereof, a recessed plug provided with a circumferential groove and fitted in the bore in advance of the bushing, a stop-screw engaging with the grooved plug, a firing-pin fitted in the plug and having an angular shank which is slidably guided in the bushing, and a spring to normally retract the firing-pin, substantially as described.

4. The combination with a gun-barrel, of a standing breech having a longitudinal bore the axis of which is in eccentric relation to, and parallel with, the axis of the gun-barrel, a firing-pin having a guide-stem which is out of line with the working end of the pin, and means for guiding and adjusting the firing-pin axially within said bore of the breech-block, substantially as described.

5. The combination with a gun-barrel, of a standing breech having a longitudinal bore, the axis of which is eccentric to, and parallel with, the axis of said gun-barrel, a bushing and block fitted in opposite ends of said bore for axial adjustment therein, a spring-actuated firing-pin slidably fitted in said bushing and plug for adjustment therewith, said firing-pin serving to operatively connect the bushing and plug, and means for adjusting the bushing, as and for the purposes described.

In testimony that I claim the foregoing as my own I have hereto affixed my signature in the presence of two witnesses.

BRICE E. PEASE.

Witnesses:
W. H. S. HATCH,
SUMNER E. BLACKSTONE.