Feb. 16, 1926. **1,573,242**

W. A. HAND

ATTACHMENT FOR HARMONICAS

Filed Nov. 7, 1923 2 Sheets-Sheet 1

Fig. 1.

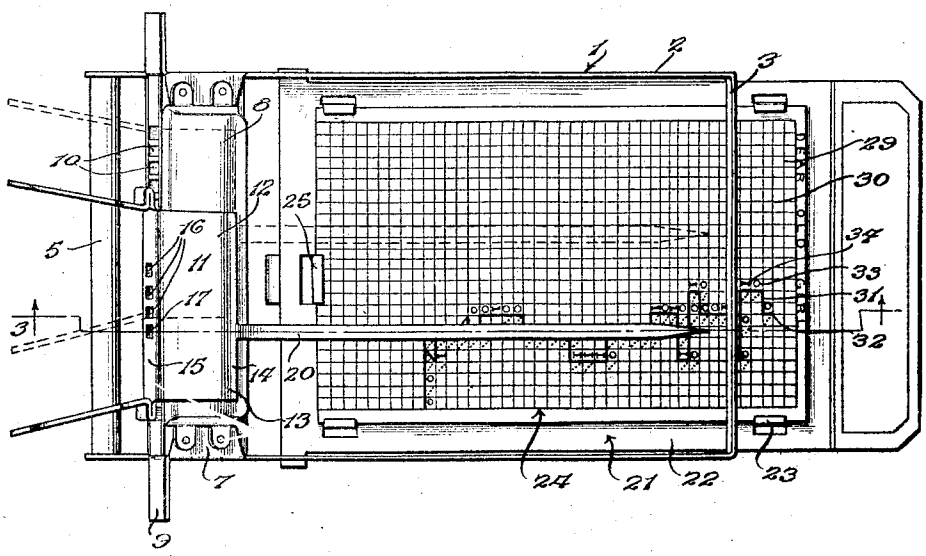

Fig. 2.

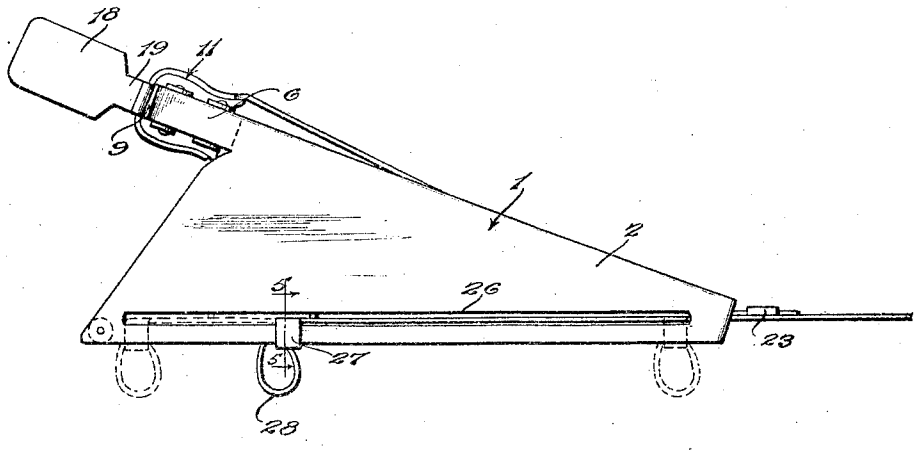

Inventor

W.A. Hand

By Lacey & Lacey. Attorneys

Feb. 16, 1926. 1,573,242

W. A. HAND

ATTACHMENT FOR HARMONICAS

Filed Nov. 7, 1923 2 Sheets-Sheet 2

Fig. 3.

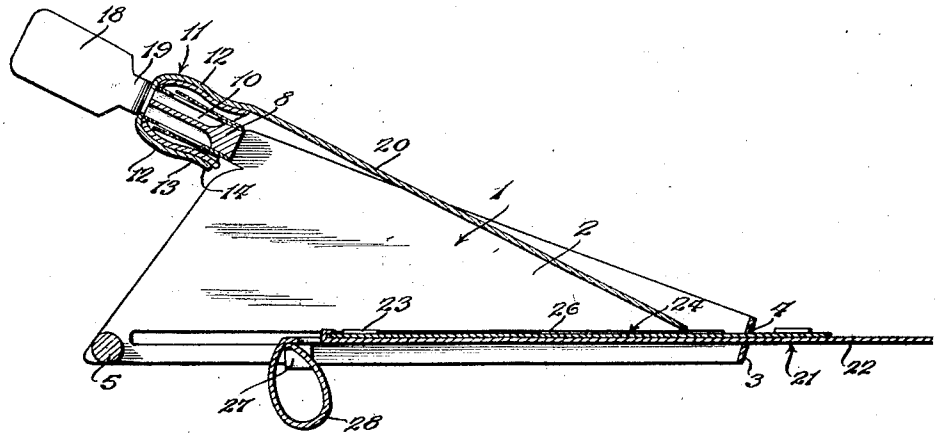

Fig. 4.

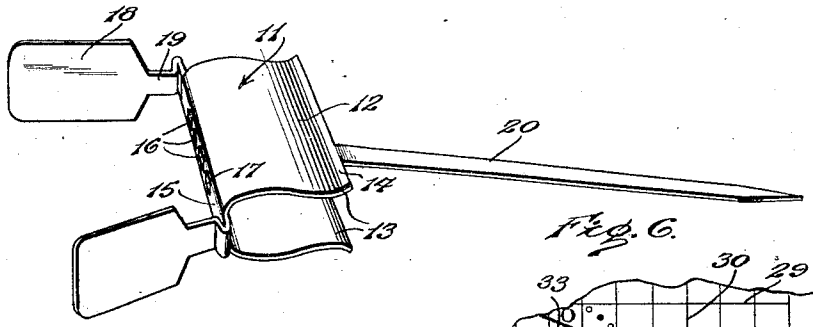

Fig. 5

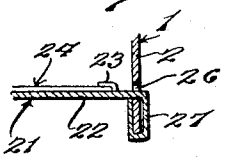

Fig. 6.

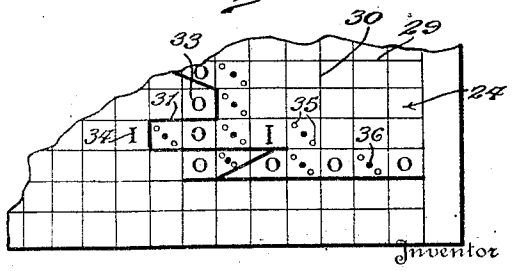

Inventor

Walter A. Hand

By Lacy & Lacy Attorneys

Patented Feb. 16, 1926. 1,573,242

UNITED STATES PATENT OFFICE.

WALTER A. HAND, OF BROOKLYN, NEW YORK.

ATTACHMENT FOR HARMONICAS.

Application filed November 7, 1923. Serial No. 673,309.

To all whom it may concern:

Be it known that I, WALTER A. HAND, a citizen of the United States, residing at Brooklyn, in the county of Kings and State of New York, have invented certain new and useful Improvements in Attachments for Harmonicas, of which the following is a specification.

This invention has as its object to provide a device for employment in connection with a harmonica, and by the use of which device one may, upon this simple musical instrument, play various musical compositions even though unable to read musical notation.

Another object of the invention is to provide a device for the purpose stated so constructed and capable of use in such a manner as to accurately instruct the user in the proper rendition of the composition to be played, so that after a piece has been played several times the player will become familiar with the score and quite proficient in its rendition.

Another object of the invention is to provide a device for the purpose stated which may be applied to practically any standard harmonica and manipulated in a most convenient manner.

The device embodying the invention includes in its structure means for supporting the harmonica, a slide movable along the mouth piece of the harmonica and embodying an arrangement of openings through which air currents are to be induced by the player, means for supporting a music sheet within view of the player, and means associated with the slide for coaction with the music sheet to indicate which notes of the composition are to be sounded, and another object of the invention is to provide novel means for mounting the music sheet holder whereby the sheet may be conveniently and accurately adjusted without confusion to the player.

Another object of the invention is to provide means for so mounting the slide for movement with relation to the mouth piece of the instrument that the user of the device will naturally acquire skill in manipulating or transversely sliding the harmonica with relation to his mouth.

Another object of the invention is to provide a novel type of music sheet for employment in connection with a device of this class, the invention contemplating the provision of a novel selection of symbols upon the face of the sheet which will be readily intelligible to the player and by noting which he may readily render the composition to be played.

In the accompanying drawings:

Figure 1 is a top plan view of the device embodying the invention;

Figure 2 is a side elevation of the device;

Figure 3 is a vertical front to rear sectional view through the device on the line 3—3 of Figure 1 looking in the direction indicated by the arrows;

Figure 4 is a perspective view of the slide of the device;

Figure 5 is a detail vertical transverse sectional view on the line 5—5 of Figure 2 looking in the direction indicated by the arrows;

Figure 6 is a fragmentary plan view in detail of a portion of the music sheet.

The device embodying the invention includes a supporting member which is indicated in general by the numeral 1 and may be formed of sheet metal and comprises sides 2 and a front connecting cross piece 3. The sides 2 are preferably of substantially the triangular form shown in Figures 2 and 3 of the drawings, and the cross piece 3 extends between the forward or narrower ends of the said sides 2 and, for a purpose to be presently explained, is provided with a longitudinally extending slot indicated by the numeral 4. A hand rest 5 extends between and connects the lower rear corners of the sides 2 and is preferably in the nature of a substantially cylindrical piece of wood of a diameter adapting it to rest upon the hand of the user without causing annoyance or inconvenience. At their upper edges and, more specifically, at their upper rear corners, the sides 2 of the support are pro-

vided with extensions 6 which project upwardly and rearwardly from the said corners of the sides and are provided along their upper edges with inturned flanges 7. The flange 7 overlies the upper side of the harmonica, which is indicated by the numeral 8, at the ends thereof and are secured thereto by any suitable fastening means adapting the harmonica to be either permanently or removably held in place upon the support. For a purpose to be presently explained, each extension 6 is provided with a laterally outwardly extending guide portion indicated by the numeral 9 which occupies a plane substantially the same as the plane occupied by the mouth piece of the harmonica. The harmonica is in itself of the ordinary construction and embodies the usual reed openings or air passages 10 which extend in a series longitudinally of the said mouth piece of the instrument.

The sliding mouth piece of the device is indicated in general by the numeral 11 and the same comprises spaced resilient wings 12 which are preferably flexed along reversely curved lines as illustrated in the drawings so that there are provided bearing portions 13 and upturned edge portions 14, the wings being connected at their opposite edge portions by a connecting portion 15 provided with three openings indicated by the numeral 16, and a fourth opening indicated by the numeral 17, these openings being preferably substantially rectangular and conforming in dimensions to the dimensions of the reed openings 10 in the harmonica in connection with which the device is employed. The mouth piece slide is adapted to be frictionally fitted onto the harmonica in the manner clearly shown in Figures 1, 2 and 3 of the drawings, the upturned edge portions 14 permitting of the slide being readily slipped over the harmonica, and the portions 13 bearing frictionally against the upper and under sides of the plates of the harmonica. When the slide is properly positioned upon the harmonica, the connecting portion 15 will rest flat against the mouth piece of the harmonica, and by reference to Figure 1 it will be observed that the slide may be moved back and forth across the instrument so that the openings 16 and 17 may be brought into registration with the openings 10 in a selective manner. The mouth piece 11 is, of course, to be held stationary with relation to the lips of the player, and with this end in view cheek plates 18 are provided for engagement with the cheeks of the player and are connected by resilient shanks 19 with the opposite ends of the connecting portion 15 of the said mouth piece 11. These cheek plates do not of course so firmly bear against the cheeks of the player as to cause inconvenience or annoyance or in any way interfere with playing of the harmonica, but as stated their purpose is to maintain the mouth piece as a whole in fixed relation to the lips of the player so that air may be blown or sucked through the openings 16 and 17 to sound the proper reeds of the instrument. The slidable mouth piece 11 is provided with a pointer 20 which extends downwardly and forwardly from the upper wing 12 of the said mouth piece and between the sides 2 of the support of the device to coact with the music sheet upon the music sheet support as will presently be explained. The pointer 20 is substantially in direct alinement with the opening 17 in the connecting portion 15 of the said mouth piece.

The music sheet holder or support is indicated in general by the numeral 21 and the same comprises a plate 22 which is of substantially rectangular form and of a width to permit of its being slidably disposed between the side walls 2 of the support 1, the plate being provided near its lateral edges and more or less adjacent its ends with stamped up clips 23 beneath which the margins of the music sheet, indicated in general by the numeral 24, are to be fitted, the sheet being adapted to be slid into place and retained by the clips. To limit the sliding movement of the sheet at the time of its introduction, a clip 25 similar to the clips 23 is struck up from the plate 22 near its rear end, the rear or lower edge of the sheet being receivable beneath this clip. The plate 22 comprising the music leaf support or holder is slidably fitted through the slot 4 formed in the connecting portion 3 of the support 1, and the side walls 2 of the said support 1 are formed with longitudinally extending slots 26 parallel to the lower edges of the said walls and occupying the same plane as that occupied by the slot 4. At its rear corners, the plate 22 is provided with laterally projecting overturned slides 27 which embrace the portions of the sides 2 below the slots 26, and in this manner the rear portion of the plate 22 is supported for sliding movement, the forward portion of the plate being supported and guided by the lower wall of the slot 4. In order that the music leaf support may be manually moved forwardly step by step as the composition is being rendered, a finger piece 28 is provided at the rear end of the plate 22 and extends below the plane of the said plate in position where the player's finger may be readily inserted for the purpose stated.

The music sheet which is indicated in general by the numeral 24, may consist of a sheet of card board, and the face of this sheet or leaf is ruled by vertical and horizontal lines indicated respectively by the numerals 29 and 30. The horizontal lines indicate, generally, the distance the music

sheet or leaf is to be moved in a forward direction, and the vertical lines 30 indicate the distance the mouth piece 11 is to be moved in a transverse direction, the extremity of the pointer 20 registering with these lines and resting upon the surface of the leaf. The vertical divisions defined by the lines 30 represent, of course, the notes which will be sounded when air is blown or sucked through the reed openings 10 of the harmonica, and at this point it may be stated that the opening 17 represents the treble opening of the mouth piece 11 and that the openings 16 represent the bass notes. Consequently, when the terminal of the pointer 20 is in registration with one or another of the vertical lines 30, the opening 17 will be in registration with the corresponding reed opening 10 of the harmonica and one note or the other will be sounded when air is blown through or sucked through the said opening 17 and the corresponding opening 10. The same, of course, holds true of the openings 16 which represent the bass notes and these openings 16 will at such time be in registration with the proper reed openings 10 of the harmonica to sound the accompaniment for the treble notes. In order that the player of the instrument may be guided in the use of the device so as to properly render the composition, a tracker line 31 is printed upon the face of the music sheet and follows the horizontal and vertical lines beginning at a starting point which is indicated in the drawings arbitrarily by the numeral 32, and by following which line with the extremity of the pointer 20, simultaneously through coordinate movement of the music leaf holder in an outward direction and the mouth piece 11 in a transverse direction, the successive notes may be played with their proper duration. Of course, in playing the instrument, and in following the tracker line 31, the player will either shift the leaf holder 21 forwardly one or more divisions as indicated by the horizontal lines 29 and that portion of the tracker line which extends along the same, or he will shift the attachment bodily toward the right or left or move his head toward the right or left to cause the extremity of the pointer 20 to follow the tracker line along one or another of the horizontal lines 29. As regards any particular composition of music, portions of the tracker line 31 will be designated by symbols such, for example, as the letters "O" and "I" and indicated respectively by the numerals 33 and 34, these symbols indicating, in the first instance, that air is to be blown through the openings in the mouth piece 11, and, in the second instance, that air is to be drawn in by suction through the openings in the mouth piece. In juxtaposition to each of the symbols 33 and 34 there will be printed a series of dots, certain of which, indicated by the numeral 35, are of one distinctive color, as, for example, red, and others, indicated by the numeral 36, are of another distinctive color, as, for example, black. These dots indicate to the player that he is alternately, continuously, or otherwise, cover or leave unexposed the three openings 16 in the mouth piece 11, and if due consideration is given the significance of these dots as their relationship to the particular note indications with which they are associated, the composition may be rendered by the player in proper tempo.

Having thus described the invention, what is claimed as new is:

1. A harmonica attachment comprising a support for the harmonica, a mouth piece movable transversely of the support and having an opening for selective registration with the reed openings of the harmonica, a music leaf holder mounted upon the support and movable in a direction longitudinally of the support towards and away from the harmonica, and indicator means carried by the mouth piece for cooperation with a music leaf supported by the leaf holder.

2. A harmonica attachment comprising a support for the harmonica, a mouth piece movable transversely of the support and having openings for registration selectively with associated treble and bass reed openings of the harmonica, a music leaf holder mounted upon the support and movable in a direction longitudinally of the support towards and away from the harmonica, and indicator means carried by the mouth piece for cooperation with a music leaf supported by the leaf holder.

3. A harmonica attachment comprising a support for the harmonica, a mouth piece movable transversely of the support and having spaced resilient wings to embrace and engage the opposite sides of the harmonica, and likewise having a connecting portion between the wings provided with an opening for selective registration with the reed openings of the harmonica, a music leaf holder mounted upon the support and movable in a direction longitudinally of the support towards and away from the harmonica, and indicator means carried by the mouth piece for cooperation with a music leaf supported by the leaf holder.

4. A harmonica attachment comprising a support for the harmonica, the support including spaced side members between which the harmonica is supported, extensions upon the said side members occupying substantially the plane of the mouth piece of the harmonica, a mouth piece movable transversely of the support and having an opening for selective registration with the reed openings of the harmonica, the said mouth piece being, near the extreme limits of its

movement, braced and supported by the said extensions of the side members of the support, a music leaf holder mounted upon the support and movable in a direction longitudinally of the support towards and away from the harmonica, and indicator means carried by the mouth piece for cooperation with a music leaf supported by the leaf holder.

5. A harmonica attachment comprising a support for the harmonica, a mouth piece movable transversely of the support and having an opening for selective registration with the reed openings of the harmonica, a music leaf holder mounted upon the support and movable in a direction longitudinally of the support towards and away from the harmonica, and an indicating pointer extending forwardly from the mouth piece for cooperation with a music leaf supported upon the leaf holder.

6. A harmonica attachment comprising a support for the harmonica, a mouth piece movable transversely of the support and comprising spaced resilient wings to embrace and frictionally fit the opposite sides of the harmonica and likewise comprising a connecting portion between the wings having an opening for selective registration with the reed openings of the harmonica, a music leaf holder mounted upon the support and movable in a direction longitudinally of the support towards and away from the harmonica, and an indicating pointer extending forwardly from the upper one of the said leaves of the mouth piece and having a pointed end for cooperation with a music leaf supported by the leaf holder.

7. A harmonica attachment comprising a support for the harmonica, a mouth piece movable transversely of the support and having an opening for selective registration with the reed openings of the harmonica, a music leaf holder mounted upon the support and movable in a direction longitudinally of the support, a finger piece extending below the holder and providing means whereby the holder may be so adjusted, and an indicating pointer extending forwardly from the said mouth piece for cooperation with a music leaf supported by the leaf holder.

8. A harmonica attachment comprising a support for the harmonica, a mouth piece movable transversely of the support and having spaced cheek plates, the said mouth piece having an opening for selective registration with the reed openings of the harmonica, a music leaf holder mounted upon the support and movable in a direction longitudinally of the support, and indicator means carried by the mouth piece for cooperation with a music leaf supported by the leaf holder.

9. A harmonica attachment comprising a support for the harmonica, a mouth piece comprising a body member having spaced wings and a connecting portion to embrace the harmonica upon the support and thus be slidably supported thereon, cheek engaging wings at the opposite ends of the connecting portion of the said mouth piece, said connecting portion of the mouth piece having an opening for registration with the reed openings of the harmonica, a music leaf holder mounted upon the support and movable in a direction longitudinally of the support, and indicator means carried by the mouth piece for cooperation with a music leaf supported by the leaf holder.

10. A harmonica attachment comprising a support for the harmonica, a mouth piece movable transversely of the support and comprising spaced wing members and a connecting portion arranged to embrace and slidably fit the harmonica supported by the support, the said connecting portion of the mouth piece having an opening for selective registration with the reed openings of the harmonica, resilient shank members extending from the end of the said connecting member of the mouth piece, cheek plates supported by the said shank members, a music leaf holder mounted upon the support and movable in a direction longitudinally of the support, and indicator means carried by the mouth piece for cooperation with a music leaf supported by the leaf holder.

11. A harmonica attachment comprising a support for the harmonica embodying side members and a connecting front member provided with a longitudinally extending slot, means upon the side members for supporting a harmonica in position extending between their rear portions, a mouth piece movable transversely of the support and upon the harmonica and having an opening for selective registration with the reed openings of the harmonica, a music leaf holder comprising a plate slidably fitted through the slot in the connecting front member of the support, means supporting the rear portion of the said plate, means upon the plate for retaining a music leaf in position thereon, and indicator means carried by the mouth piece for cooperation with a music leaf supported by the leaf holder.

12. A harmonica attachment comprising a support for the harmonica embodying side walls and a connecting front member having a longitudinal slot therein, means at the rear portions of the side walls for supporting a harmonica in position extending therebetween, a mouth piece slidable transversely with relation to the harmonica and having an opening for registration selectively with the reed openings of the harmonica, a music leaf holder comprising a plate slidably fitted through the slot in the connecting front portion of the said support, the side members of the support hav-

ing longitudinal slots therein substantially in the plane of the slot in the said front connecting member of the support, means upon the plate engaging in the said slots in the side members for supporting the rear portion of the plate, whereby the plate may be slidably adjusted in a front and rearward direction, a finger piece upon the plate providing such adjustment, means upon the plate for retaining a music sheet thereon, and indicator means carried by the mouth piece for cooperation with a music leaf supported by the leaf holder.

In testimony whereof I affix my signature.

WALTER A. HAND. [L. S.]